CITY OF PERRIS
SOUTH PERRIS FIRE STATION 105 AND ADMINISTRATION BUILDING

PROJECT CIP: F007

2495 MURRIETA ROAD
PERRIS, CA 92585

SCOPE OF WORK/PROJECT DESCRIPTION

THE CITY OF PERRIS WISHES TO CONSTRUCT A NEW FIRE STATION TO PROVIDE PROTECT FOR THE SOUTH END OF THE CITY'S LIMIT. THE NEW FIRE STATION WILL BE 10,800 SF. THE BUILDING INCLUDES A THREE BAY APPARATUS W/ LOCKER ROOM, (3) OFFICES, (10) SLEEPING QUARTERS, FIVE BATHROOMS, AN ACCESSIBLE RESTROOM, A KITCHEN, DAYROOM, LAUNDRY, FITNESS ROOM, ETC.

THE SITE FEATURES INCLUDE A 20 FT x 30 FT STORAGE BUILDING, A COVERED CMU WALL TRASH ENCLOSURE, DIESEL FUEL TANK AND AN EMERGENCY GENERATOR, HOSE DRYING RAMP, A METAL CAR CANOPY, PHOTOVOLTAIC (PV) SYSTEM, SITE CMU WALLS, AND A PRIVATE DISPOSAL SEWAGE SYSTEM.

THE CITY OF PERRIS ALSO WISHES TO CONSTRUCT A NEW 5,95 S.F. ADMINISTRATION BUILDING TO HOUSE THE OVERFLOW CITY & FIRE STAFF. THE BUILDING INCLUDES A TRAINING ROOM, CONFERENCE ROOMS, (7) OFFICES, OPEN CUBICLES FOR 10, A BREAK ROOM, AND A DETACHED 20 FT x 20 FT STORAGE BUILDING.

LIST OF BUILDING PERMITS:

NUMBERS:	BUILDINGS/USAGES:
BCOM-25-00416	FIRE STATION
BCOM-25-00420	ADMINISTRATION BUILDING
BCOM-25-00421	ABOVEGROUND FUEL TANK (DEFERRED)
BFIRE-26-00177	FIRE DEPARTMENT ACCESS PLAN

THE GENERAL BUILDING CONTRACTOR SHALL SUBMIT TO THE CITY OF PERRIS THE FOLLOWING DOCUMENTS FOR REVIEW AND APPROVAL PRIOR TO OBTAINING BUILDING PERMIT:

1. FIRE SPRINKLER SYSTEM SHALL BE DESIGNED, ENGINEERED AND BUILT BY GENERAL CONTRACTOR & FIRE SPRINKLER SUB-CONTRACTOR. GENERAL CONTRACTOR TO DESIGN THE SYSTEM TO MEET NFPA 13D IN THE LIVING AREA AND NFPA 13 LIGHT HAZARD IN THE APPARATUS BAYS. SPRINKLER PLANS SHALL BE SUBMITTED AND APPROVED BY THE FIRE PREVENTION BUREAU UNDER A SEPARATE PERMIT" (CBC 106.3.3.1) CONTRACTOR SHALL PROVIDE A COMPLETE AND FUNCTIONING SYSTEM, INCLUDING ANY REQUIRED ELECT. WORKS, TRENCHING, ETC., TO THE OWNER AT NO ADDED COST.
2. COMPLY W/ C.B.C. SECTION 3303.7 - "PEDESTRIAN PROTECTION" DURING CONSTRUCTION.
3. GENERAL CONTRACTOR TO PROVIDE ALL BACKING/FRAMING AS NECESSARY FOR LIGHTS, GRAB BARS, PLASTER REVEALS, SIGNS, ETC. WITH NO ADDED COST TO THE OWNER.
4. DEFERRED SUBMITTAL / SEPARATE PERMITS

   THE FOLLOWING ARE UNDER DEFERRED SUBMITTAL/SEPARATE PERMITS (TO BE OBTAINED BY THE GENERAL CONTRACTOR):
   - FLAGPOLE & FOUNDATION
   - LIGHT POLES & FOUNDATIONS
   - TRUSSES
   - FIRE ALARM
   - LPG TANK & PAD
   - BACKUP BATTERY & PAD
   - FIRE SPRINKLER SYSTEM (PER 2022 NFPA 13)
   - FIRE SERVICE UNDERGROUND (PER 2022 NFPA 24)
   - WATERFLOW MONITORING (PER 2022 NFPA 72)
   - ABOVE GROUND FUEL TANK & FOUNDATION (FIRE DEPT. & COUNTY OF RIVERSIDE ENVIRONMENTAL HEALTH APPROVAL REQUIRED).
   - EMERGENCY DIESEL GENERATOR & FOUNDATION.
   - METAL (PARKING) CANOPY & FOUNDATION.
   - ELECTRICAL TRANSFORMER PAD (BASE) AND CONNECTION TO PAD.
   - SMOKE ALARMS PER CBC 907.2.8
   - CARBON MONOXIDE ALARMS PER CBC 915.1

   SUBMITTAL DOCUMENTS (PLANS & CALCULATIONS) FOR DEFERRED ITEMS SHALL BE SUBMITTED TO THE ARCHITECT OR ENGINEER OF RECORD, WHO SHALL REVIEW THEM AND FORWARD THEM TO THE BUILDING OFFICIAL WITH A NOTATION INDICATING THAT THE DEFERRED DOCUMENTS HAVE BEEN REVIEWED AND THAT THEY HAVE BEEN FOUND TO BE IN GENERAL CONFORMANCE WITH THE DESIGN OF THE BUILDING. THE DEFERRED ITEMS SHALL NOT BE INSTALLED UNTIL THEIR DESIGN AND SUBMITTAL DOCUMENTS HAVE BEEN APPROVED BY THE BUILDING OFFICIAL, AT NO ADDITIONAL COST TO OWNER.

   THE DRAWING CONTAINED IN THE PLANS DEPICTING DEFERRED SUBMITTAL ITEMS ARE INCOMPLETE. THE GENERAL CONTRACTOR SHALL COMPLETE THE STRUCTURAL ENGINEERING AND DESIGN DETAILS, ONCE THE GENERAL CONTRACTOR HAS COMPLETED STRUCTURAL ENGINEERING, ADDITIONAL STRUCTURAL COMPONENTS SUCH AS FOUNDATION SIZE, REBAR, ETC. MAYBE REQUESTED/REQUIRED BY THE GENERAL CONTRACTOR'S ENGINEER. THE GENERAL CONTRACTOR SHALL INCORPORATE THESE ADDITIONAL STRUCTURAL AND/OR FOUNDATION REQUIREMENTS AT NO ADDED COST TO THE OWNER.
5. CLEANOUTS INSTALLED UNDER CONCRETE OR ASPHALT PAVING SHALL BE ACCESSIBLE BY YARD BOXES, OR EXTENDED FLUSH WITH PAVING WITH A "BRASS CAP" OR OTHER APPROVED MATERIAL WHEN SUBJECT TO VEHICULAR TRAFFIC. (TMCC 15.0.046(F))
6. ELECTRICAL CONDUITS IN COMMERCIAL BUILDINGS TO BE BURIED 6" BELOW CONCRETE SLAB. (TMCC 15.04.050(C))
7. VERTICAL GLAZING SHALL HAVE U-FACTORS PER NFRC 100-SB OR DEFAULT VALUES PER APPENDIX I OR ACM MANUAL. (CEC EXCEPTION TO 116(A) 2)
8. REQUIRED SPECIAL INSPECTIONS

   THE FOLLOWING SPECIAL INSPECTIONS PER 2022 C.B.C. ARE REQUIRED:
   -- SOILS COMPLIANCE PRIOR TO FOUNDATION INSPECTIONS.
   -- STRUCTURAL CONCRETE OVER 2,500 P.S.I.
   -- FIELD WELDING.
   -- HIGH-STRENGTH BOLTS.
   -- EXPANSION EPOXY ANCHORS.
   -- PROVIDE STRUCTURAL SPECIAL INSPECTIONS. SEE SHEET S0.1.
9. STRUCTURAL OBSERVATION BY THE ENGINEER/ARCHITECT SHALL BE PERFORMED. A STATEMENT IN WRITING SHALL BE GIVEN TO THE BUILDING OFFICIAL, STATING THAT THE SITE VISIT HAVE BEEN MADE AND WHETHER OR NOT ANY OBSERVED DEFICIENCIES HAVE BEEN CORRELTED TO CONFORM TO THE APPROVED PLANS AND SPECIFICATIONS. SECTION 1701.
10. WHEN SERVING MORE THAN 100 SPRINKLER HEADS, AUTOMATIC SPRINKLER SYSTEMS SHALL BE SUPERVISED BY AN APPROVED CENTRAL, PROPRIETARY OR REMOTE STATION SERVICE, OR SHALL BE PROVIDED WITH A LOCAL ALARM WHICH WILL GIVE AN AUDIBLE SIGNAL AT A CONSTANTLY ATTENDED LOCATION. SECTION 904.3. GENERAL CONTRACTOR SHALL PROVIDE FIRE ALARM AS REQUIRED BY THE FIRE DEPARTMENT. CONTRACTOR SHALL PROVIDE A COMPLETE AND FUNCTIONING SYSTEM, INCLUDING ANY REQUIRED ELECT. WORKS, TRENCHING, ETC., TO THE OWNER AT NO ADDED COST.
11. NO HAZARDOUS MATERIALS ARE TO BE STORED OR USED WITHIN THE BUILDING WHICH EXCEED THE QUANTITIES IN U.B.C. TABLES 3-D & 3-E, 2019 CBC.
12. PROVIDE A COMPLETE CATV SYSTEM INCLUDING CABLE/WIRE/CONDUIT FOR PER ELECT'L AND SHEETS A0.1, DATA 1.1.
13. GENERAL CONTRACTOR SHALL PAINT FIRE LANES CURBS THROUGHOUT ALL VEHICLE ACCESS LANES AS REQUIRED BY THE COUNTY OF RIVERSIDE FIRE DEPARTMENT AT NO ADDED COST TO OWNER. FIRE LANE CURBS SHALL BE PAINTED SAFETY RED. STENCILING SHALL BE PROVIDED IN WHITE 3-INCH LETTERS ON THE TOP OF THE CURB EVERY 30 FEET ON CENTER STATING: "NO PARKING FIRE LANE".
14. THE UNDERGROUND FIRE LINE IS NOT TO BE CONSTRUCTED UNTIL THE ABOVEGROUND FIRE SPRINKLER SYSTEM PLANS HAVE BEEN APPROVED BY THE COUNTY OF RIVERSIDE FIRE DEPARTMENT AND DISTRIBUTED TO ALL PARTIES (ARCHITECT AND OWNER).
15. GENERAL CONTRACTOR TO COORDINATE / PROVIDE A "FIBER OPTIC" PHONE LINE FROM TELEPHONE COMPANY TO TELEPHONE BACK BOARD.
16. THERE ARE NO AS BUILT PLANS FOR UNDERGROUND UTILITIES AND IRRIGATION AVAILABLE. CONTRACTOR SHALL TAKE SPECIAL CARE TO LOCATE ALL UNDERGROUND UTILITIES AND IRRIGATION LINES TO AVOID DAMAGE PRIOR TO EXCAVATION. CONTRACTOR SHALL REPAIR, RELOCATE, AND OR RE-ROUTE ANY UTILITIES AND OR IRRIGATION LINES FOUND TO BE IN CONFLICT WITH THE NEW CONSTRUCTION AT NO ADDED COST TO OWNER TO PROVIDE A FULLY FUNCTIONAL SYSTEM.
17. SMOKE ALARMS / CBC REQUIREMENTS:

    1907.2.8.5 (CBC) WHERE MORE THAN ONE SMOKE ALARM IS REQUIRED TO BE INSTALLED WITHIN AN INDIVIDUAL DWELLING UNIT OR SLEEPING UNIT IN GROUP R OCCUPANCIES, THE SMOKE ALARMS SHALL BE INTERCONNECTED IN SUCH A MANNER THAT THE ACTIVATION OF ONE ALARM WILL ACTIVATE ALL OF THE ALARMS IN THE INDIVIDUAL UNIT. PHYSICAL INTERCONNECTION OF SMOKE ALARMS SHALL NOT BE REQUIRED WHERE LISTED WIRELESS ALARMS ARE INSTALLED AND ALL ALARMS SOUND UPON ACTIVATION OF ONE ALARM. THE ALARM SHALL BE CLEARLY AUDIBLE IN ALL BEDROOMS OVER BACKGROUND NOISE LEVELS WITH ALL INTERVENING DOORS CLOSED.

    1907.2.8.6 (CBC) IN NEW CONSTRUCTION, REQUIRED SMOKE ALARMS SHALL RECEIVE THEIR PRIMARY POWER FROM THE BUILDING WIRING WHERE SUCH WIRING IS SERVED FROM A COMMERCIAL SOURCE AND SHALL BE EQUIPPED WITH A BATTERY BACKUP. SMOKE ALARMS WITH INTEGRAL STROBES THAT ARE NOT EQUIPPED WITH BATTERY BACKUP SHALL BE INTERCONNECTED TO AN EMERGENCY ELECTRICAL SYSTEM IN ACCORDANCE WITH SECTION 2702. SMOKE ALARMS SHALL EMIT A SIGNAL WHEN THE BATTERIES ARE LOW. WIRING SHALL BE PERMANENT AND WITHOUT A DISCONNECTING SWITCH OTHER THAN AS REQUIRED FOR OVERCURRENT PROTECTION.
18. BIDDING INSTRUCTION:

    A. BASE BID: EVERYTHING SHOWN IN PLANS PERTAINING TO FIRE STATION & COMPONENTS, EXCEPT ADDITIVE ALTERNATE #1, ALSO INCLUDE IN BASE BID ARE:
       - WQMP SYSTEM / UNDERGROUND CHAMBERS.
       - ADMIN. BUILDING PAD & ROUGH GRADING THE ENTIRE SITE.
       - ROADWAY IMPROVEMENTS (UTILITIES, CURB/GUTTER, SIDEWALK & LANDSCAPE) ALONG ENTIRE FRONTAGE OF MURRIETA ROAD.
       - PROVIDE TEMPORARY A.C. CURB AT NORTH CONCRETE DRIVEWAY EDGES, IF ADDITIVE ALTERNATE #1 IS NOT ACCEPTED - SEE SHEET A1.1 & FIELD VERIFY.

    B. ADDITIVE ALTERNATE #1: EVERYTHING SHOWN IN PLANS LABELED AS ADDITIVE ALTERNATE #1, INCLUDING:
       - ADMIN. BUILDING & COMPONENTS.
       - STORAGE BUILDING (20x20) AT ADMIN. BUILDING.
       - LANDSCAPE, PAVING & MOTORIZED ROLLING GATE SYSTEM.
       - 2,500 GAL PRIVATE DISPOSAL SEWAGE SYSTEM.
       - CMU SITE WALL ON ADMIN. BUILDING SIDE.
       - APPENDIX E (IT EQUIPMENT FOR ADMIN. BUILDING).

NOTES TO GENERAL CONTRACTOR

INSTALLED INSULATING MATERIAL SHALL HAVE BEEN CERTIFIED BY THE MANUFACTURER TO COMPLY WITH THE CALIFORNIA QUALITY STANDARDS FOR INSULATING MATERIAL.

ALL INSULATING MATERIALS SHALL BE INSTALLED IN COMPLIANCE WITH THE FLAME SPREAD RATING AND SMOKE DENSITY REQUIREMENTS OF SECTION 2602 AND 707 OF THE CBC.

ALL EXTERIOR JOINTS AND OPENINGS IN THE BUILDING ENVELOPE THAT ARE OBSERVABLE SOURCES OF AIR LEAKAGE SHALL BE CAULKED, GASKETED, OR WEATHERSTRIPPED.

SITE CONSTRUCTED DOORS, WINDOWS AND SKYLIGHTS SHALL BE CAULKED BETWEEN THE UNIT AND THE BUILDING, AND SHALL BE WEATHER STRIPPED (EXCEPT FOR UNFRAMED GLASS DOORS AND FIRE DOORS)

MANUFACTURED DOORS AND WINDOWS INSTALLED SHALL HAVE AIR INFILTRATION RATES CERTIFIED BY THE MANUFACTURER PER 2-5369(a)ii. AFTER JULY 1, 1993, MANUFACTURED FENESTRATION PRODUCTS MUST BE LABELED FOR U-VALUE ACCORDING TO NFRC PROCEDURES. ALSO ALL OVERHEAD DOORS OF APPARATUS ROOM. PROVIDE CERTIFICATES OF COMPLIANCE FOR DOORS, WINDOWS & INSULATION.

TITLE 24 MANDATORY MEASURES

A PRE-CONSTRUCTION CONFERENCE WITH THE GEOTECHNICAL ENGINEER SHALL BE HELD AT THE SITE PRIOR TO THE INITIATION OF SITE GRADING TO ASSURE A COMPLETE UNDERSTANDING OF THE RECOMMENDATIONS PRESENTED IN THIS REPORT AS THEY APPLY TO THE ACTUAL GRADING PERFORMED.

THE FOLLOWING SHALL BE INSPECTED BY THE GEOTECHNICAL ENGINEER:

BUILDING PAD - WHEN OVER EXCAVATION WORK HAS REACHED BOTTOM.

BUILDING PAD - WHEN OVER EXCAVATION MATERIAL IS BEING PLACED. TESTS SHOULD BE TAKEN • 2'-0" VERTICAL INTERVALS.

MATERIAL IMPORT - WHEN PLACEMENT OF IMPORT MATERIAL. TESTS SHOULD BE TAKEN • 2'-0" VERTICAL INTERVALS.

CONCRETE - PRIOR TO ANY BUILDING OR SITE CONCRETE PLACEMENT. (NON-RETAINING CMU WALLS DO NOT REQUIRE TESTING)

CONCRETE - PRIOR TO THE PLACEMENT OF BASE, STEEL, & CONCRETE. THE CONCRETE SUB-GRADE SHOULD BE TESTED. THIS INCLUDES ALL CONCRETE SLABWORK.

SITE UTILITY TRENCHES - ALL SITE UTILITY TRENCHES MUST BE TESTED FOR PROPER COMPACTION.

SITE LIGHTING ELECTRICAL TRENCHES - ALL TRENCHES MUST BE TESTED FOR PROPER COMPACTION.

LANDSCAPE SLEEVES - ALL TRENCHES FOR LANDSCAPE SLEEVES MUST BE TESTED FOR PROPER COMPACTION.

NOTE: THE GENERAL CONTRACTOR SHOULD BECOME FAMILIAR W/ THE SOILS REPORT PROVIDED AS PART OF THE SPECIFICATIONS.

GEOTECHNICAL INSPECTION CHECKLIST

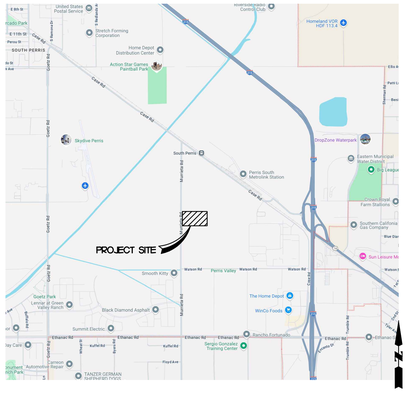

VICINITY MAP

N.T.S.

AC	= AIR COMPRESSOR	MAX.	= MAXIMUM
CG	= CORNER GUARDS	MIN.	= MINIMUM
C.J.	= CONTROL JOINTS	NIC	= NOT IN CONTRACT
CONC.	= CONCRETE	O.C.	= ON CENTER (SPACING)
CONT	= CONTRACTOR	SS	= STAINLESS STEEL
DIA.	= DIAMETER	SW. BD.	= SWITCH BOARD
E.J.	= EXPANSION JOINT	TEL	= TELEPHONE BACKBOARD.
EM	= EMERGENCY	TV	= TELEVISION
EXH	= EXHAUST SYSTEM, SEE MECH.	TYP.	= TYPICAL CONDITION, UON
FD	= FLOOR DRAIN	UON	= UNLESS OTHERWISE NOTED
FE	= FIRE EXTINGUISHER		
FS	= FLOOR SINK		
GYP. BD.	= GYPSUM BOARD		
HM	= HOLLOW METAL		

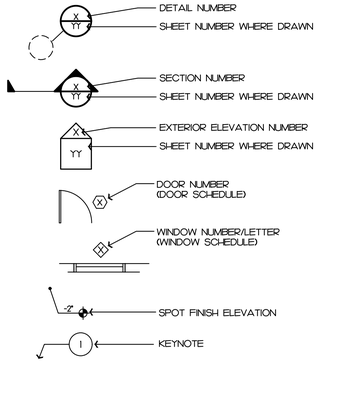

ABBREVIATIONS / SYMBOLS LEGEND

OWNER
CITY OF PERRIS
DAVID MARTINEZ, PROJECT MANAGER
101 NORTH "D" STREET
PERRIS, CA 92570
909-583-1579 / Dmartinez@cityofperris.org

ARCHITECT
STK ARCHITECTURE, INC.
TONY FINALDI, ARCHITECT
42095 ZEVO DRIVE, STE. A-15
TEMECULA, CA 92590
951-296-9110 / Tfinaldi@stkinc.com

STRUCTURAL ENGINEER
INNOVATIVE STRUCTURAL ENGINEERING
SHAWN LOTHROP, P.E., S.E. / CEO
27369 VIA INDUSTRIA
TEMECULA, CA 92590
951-600-0032 / Shawn@iseengineers.com

MPE ENGINEER
DESIGN WEST ENGINEERING
ADRIAN JACQUEZ
1845 BUSINESS CENTER DR., SUITE 215
SAN BERNARDINO, CA 92408
909-890-3700 / A.Jacquez@designwesteng.com

CIVIL ENGINEER
ERSC REDLANDS LOCATION
MATT BRUDIN, P.E. / PRINCIPAL
1861 W REDLANDS BLVD.
REDLANDS, CA 92373
909-890-1255 / Matt@erscinc.com

LANDSCAPE ARCHITECT
ALHAMBRA GROUP
VINCE DI DONATO
41635 ENTERPRISE CIRCLE N., STE. C
TEMECULA, CA 92590
951-296-6802 / Vince@alhambragroup.net

GEOTECHNICAL ENGINEER
INLAND FOUNDATION ENGINEERING
ALLEN EVANS, PE
1310 S. SANTA FE AVENUE
SAN JACINTO, CA 92581
(951) 654-1555 / aevans@inlandfoundation.com

DESIGN TEAM

ASSESSOR'S PARCEL NUMBERS: 327-210-016

PROPERTY DESCRIPTION
BEING A PORTION OF LOT 34 IN TRACT No. 24648
PER M.B. 226/88-100, RECORDS OF RIVERSIDE COUNTY, CALIFORNIA

FIRE STATION

OCCUPANCY GROUP	= B, R2
TYPE OF CONSTRUCTION	= V-B
SPRINKLERED (YES/NO)	= YES
STORIES	= 1
HEIGHT (ALLOWABLE 40'-0")	= 20'-3"
BASIC ALLOWABLE FLOOR AREA	= 28,000 S.F.
ACTUAL WORK/SLEEP FLOOR AREA	= 4,964 S.F. < 28,000 S.F. (OK)

APPARATUS BAY

OCCUPANCY GROUP	= S2
TYPE OF CONSTRUCTION	= V-B
SPRINKLERED (YES/NO)	= YES
STORIES	= 1
HEIGHT (ALLOWABLE 60'-0")	= 26'-8"
BASIC ALLOWABLE FLOOR AREA	= 54,000 S.F.
ACTUAL APPARATUS BAY FLOOR AREA	= 5,800 S.F. < 54,000 F.S. (OK)
TOTAL FLOOR AREA (FIRE STATION & APPARATUS)	= 10,920 S.F.

STORAGE BUILDING

OCCUPANCY GROUP	= S1
TYPE OF CONSTRUCTION	= V-B
SPRINKLERED (YES/NO)	= NO
STORIES	= 1
HEIGHT	= 13'-4"
BASIC ALLOWABLE FLOOR AREA	= 9,000 S.F.
ACTUAL STORAGE BLDG. FLOOR AREA	= 600 S.F. < 9,000 S.F. (OK)

ADMINISTRATIVE BUILDING

OCCUPANCY GROUP	= B
TYPE OF CONSTRUCTION	= V-B
SPRINKLERED (YES/NO)	= YES
STORIES	= 1
HEIGHT (ALLOWABLE 40'-0")	= 28'-8"
BASIC ALLOWABLE FLOOR AREA	= 36,000 S.F.
ACTUAL WORK/SLEEP FLOOR AREA	= 5,195 S.F. < 36,000 S.F. (OK)

STORAGE BUILDING

OCCUPANCY GROUP	= S1
TYPE OF CONSTRUCTION	= V-B
SPRINKLERED (YES/NO)	= NO
STORIES	= 1
HEIGHT	= 13'-4"
BASIC ALLOWABLE FLOOR AREA	= 9,000 S.F.
ACTUAL STORAGE BLDG. FLOOR AREA	= 400 S.F. < 9,000 S.F. (OK)

LIST OF APPLICABLE CODES

ALL WORK SHALL COMPLY WITH CURRENTLY ADOPTED:

2022 CALIFORNIA BUILDING CODE (CBC), PART 2, TITLE 24 C.C.R. (2021 INTERNATIONAL BUILDING CODE)

2022 CALIFORNIA ELECTRICAL CODE (CEC), PART 3, TITLE 24 C.C.R. (2021 NATIONAL ELECTRICAL CODE)

2022 CALIFORNIA MECHANICAL CODE (CMC) PART 4, TITLE 24 C.C.R. (2021 UNIFORM MECHANICAL CODE)

2022 CALIFORNIA PLUMBING CODE (CPC), PART 5, TITLE 24 C.C.R. (2021 UNIFORM PLUMBING CODE)

2022 CALIFORNIA GREEN BUILDING STANDARDS CODE

2022 CALIFORNIA ENERGY CODE

2022 CALIFORNIA FIRE CODE

CITY OF PERRIS MUNICIPAL CODE

AMERICANS WITH DISABILITIES ACT 1990 WITH 2010 ADA STANDARDS FOR ACCESSIBLE DESIGN AND 2010 REVISIONS TO TITLE II

SHEET INDEX, CONT.

LEGAL DESCRIPTION/CODE ANALYSIS

INFORMATION TECHNOLOGY PLANS
DATA 2.0 - FIRE STATION COMMUNICATIONS PLAN
DATA 2.1 - ADMIN. BUILDING COMMUNICATIONS PLAN
DATA 2.2 - FIRE DEPT. COMMUNICATIONS STANDARDS

T1.1 - TITLE SHEET
T1.2 - EGRESS PLAN - FIRE STATION
T1.3 - EGRESS PLAN - ADMINISTRATION BUILDING
T1.4 - CAL GREEN
T1.5 - CONDITIONS OF APPROVAL
T1.6 - CONDITIONS OF APPROVAL

CIVIL
C-1 - TITLE SHEET
C-2 - DETAILS
C-3 - SECTIONS AND DETAILS
C-4 - PRECISE GRADING PLAN
C-5 - PRECISE GRADING PLAN
C-6 - UTILITY PLAN
C-7 - UTILITY PLAN
C-8 - EROSION CONTROL PLAN
C-9 - EROSION CONTROL PLAN

WQMP
1 of 1 - WQMP MAP

SEPTIC SYSTEM
D-1 - ON-SITE WASTEWATER TREATMENT

LANDSCAPING
1 of 11 - TITLE SHEET
2 of 11 - SHEET INDEX MAP
3 of 11 - IRRIGATION PLAN
4 of 11 - IRRIGATION CALCULATIONS AND NOTES
5 of 11 - IRRIGATION DETAILS
6 of 11 - IRRIGATION DETAILS
7 of 11 - IRRIGATION DETAILS
8 of 11 - IRRIGATION DETAILS
9 of 11 - IRRIGATION SPECIFICATIONS
10 of 11 - PLANTING PLAN
11 of 11 - DETAILS AND SPECS

ARCHITECTURAL
A0.1 - UTILITY SITE PLAN - SCE
A0.2 - UTILITY DETAILS - SCE
A0.3 - UTILITY PLAN - FRONTIER
A1.0 - FIRE ACCESS PLAN
A1.1 - SITE PLAN & DETAILS
A1.2 - SITE DETAILS
A1.3 - SITE DETAILS
A1.4 - SITE DETAILS
A1.5 - SITE CMU WALL & DETAILS
A1.6 - CANOPY PLANS
A1.7 - CANOPY SECTION & ELEVATIONS
A2.0A - DIMENSION FLOOR PLAN - FIRE STATION
A2.0B - DIMENSION FLOOR PLAN - ADMIN. BUILDING
A2.1 - EQUIPMENT FLOOR PLAN - FIRE STATION
A2.2A - REFERENCE FLOOR PLAN - FIRE STATION
A2.2B - REFERENCE FLOOR PLAN - ADMIN. BUILDING
A2.3A - SCHEDULES - FIRE STATION
A2.3B - SCHEDULES - ADMIN. BUILDING
A2.4 - DOOR & WINDOW DETAILS
A2.5A - REFLECTED CEILING PLAN - FIRE STATION
A2.5B - REFLECTED CEILING PLAN - ADMIN. BUILDING
A2.6A - ROOF PLAN - FIRE STATION
A2.6B - ROOF PLAN - ADMIN. BUILDING
A2.7 - FINISH PLAN
A3.1A - BUILDING SECTIONS - FIRE STATION
A3.1B - BUILDING SECTIONS - ADMIN. BUILDING
A3.2A - EXTERIOR ELEVATIONS - FIRE STATION
A3.2B - EXTERIOR ELEVATIONS - ADMIN. BUILDING
A4.2 - INTERIOR ELEVATIONS - FIRE STATION
A5.1 - INTERIOR ELEVATIONS - FIRE STATION
A5.2 - INTERIOR ELEVATIONS - ADMIN. BUILDING
A6.1 - MISCELLANEOUS DETAILS
A6.2 - MISCELLANEOUS DETAILS
A6.3 - MISCELLANEOUS DETAILS

STRUCTURAL
SCS - STRUCTURAL COVER SHEET
SN1 - STRUCTURAL NOTES
SN2 - STRUCTURAL NOTES
S1 - FIRE STATION FOUNDATION PLAN
S2 - FIRE STATION ROOF FRAMING PLAN
S3 - FIRE STATION CLERESTORY ROOF FRAMING PLAN
S3.1 - FIRE STATION ROOF WIND LOAD DIAGRAM
S4 - ADMIN. BUILDING FOUNDATION PLAN
S5 - ADMIN. BUILDING ROOF FRAMING PLAN
S5.1 - ADMIN. BUILDING ROOF WIND LOAD DIAGRAM
S6 - STORAGE BUILDINGS FOUNDATION AND ROOF FRAMING PLANS
S7 - FUEL TANK CANOPY FOUNDATION AND ROOF FRAMING PLANS
S8 - TRASH ENCLOSURE FOUNDATION AND ROOF FRAMING PLANS
SD1 - STRUCTURAL FOUNDATION DETAILS
SD2 - STRUCTURAL GENERAL FRAMING DETAILS
SD2.1 - STRUCTURAL GENERAL FRAMING DETAILS
SD3 - STRUCTURAL ROOF FRAMING DETAILS
SD4 - SITE STRUCTURAL DETAILS

PLUMBING
P0.1 - PLUMBING LEGENDS & NOTES
P0.2 - PLUMBING SCHEDULES
P1.0 - PLUMBING SITE PLAN
P2.1 - PLUMBING FLOOR PLAN - WASTE & VENT ADMIN BUILDING
P2.2 - PLUMBING FLOOR PLAN - COLD & HOT WATER ADMIN BUILDING
P3.1A - PLUMBING FLOOR PLAN - ENLARGED WASTE & VENT SEG A - FIRE STATION
P3.1B - PLUMBING FLOOR PLAN - ENLARGED WASTE & VENT SEG B - FIRE STATION
P3.2A - PLUMBING FLOOR PLAN - ENLARGED CW & HW WATER SEG A - FIRE STATION
P3.2B - PLUMBING FLOOR PLAN - ENLARGED CW & HW WATER SEG B - FIRE STATION
P4.1 - PLUMBING DETAILS (CONT.)
P4.2 - PLUMBING DETAILS (CONT.)
P4.3 - PLUMBING RISER DIAGRAM - DOMESTIC COLD WATER
P4.4 - PLUMBING RISER DIAGRAM - DOMESTIC HOT WATER
P4.5 - PLUMBING RISER DIAGRAM - WASTE & VENT
P4.6 - ENERGY COMPLIANCE DOCUMENTS

MECHANICAL
M0.1 - MECHANICAL LEGENDS & NOTES
M0.2 - MECHANICAL SCHEDULES
M1.0 - MECHANICAL OVERALL PLAN
M2.1 - MECHANICAL FLOOR PLAN - ADMIN. BUILDING
M2.2 - MECHANICAL ROOF PLAN - ADMIN. BUILDING
M3.1A - MECHANICAL ENLARGED FLOOR PLAN - FIRE STATION
M3.1B - MECHANICAL ENLARGED FLOOR PLAN - APPARATUS BAY
M3.2 - MECHANICAL ROOF PLAN - FIRE STATION
M4.1-M4.3 - MECHANICAL DETAILS (3 SHEETS)
M5.1-M5.12 - ENERGY COMPLIANCE DOCUMENTS (12 SHEETS)

ELECTRICAL
E0.1 - ELECTRICAL LEGENDS & NOTES
E0.2 - LUMINAIRE SCHEDULE
E0.3 - SINGLE LINE DIAGRAM
E0.4 - PANEL SCHEDULES
E1.0 - ELECTRICAL SITE PLAN
E1.1 - ELECTRICAL SITE PHOTOMETRY PLAN
E2.1A - POWER & SIGNAL PLAN SEG A - FIRE STATION
E2.1B - POWER & SIGNAL PLAN SEG B - FIRE STATION
E2.2 - POWER & SIGNAL PLAN - ADMIN. BUILDING
E3.1A - LIGHTING PLAN - FIRE STATION SEG A
E3.1B - LIGHTING PLAN - FIRE STATION SEG B
E3.2 - LIGHTING PLAN - ADMIN. BUILDING
E3.3 - LIGHTING CONTROL RISER DIAGRAM
E3.4 - LIGHTING CONTROLS - SITE
E3.5 - LIGHTING CONTROLS - FIRE STATION SEG A
E3.6 - LIGHTING CONTROLS - FIRE STATION SEG B
E3.7 - LIGHTING CONTROLS - ADMIN. BUILDING
E3.8 - LIGHTING CONTROL DETAILS
E4.1 - FIRE STATION PHOTOMETRY - NORMAL SEG A
E4.2 - FIRE STATION PHOTOMETRY - NORMAL SEG B
E4.3 - FIRE STATION PHOTOMETRY - EMERGENCY EGRESS SEG A
E4.4 - FIRE STATION PHOTOMETRY - EMERGENCY EGRESS SEG B
E4.5 - ADMIN. BUILDING PHOTOMETRY - NORMAL
E4.6 - ADMIN. BUILDING PHOTOMETRY - EMERGENCY EGRESS
E5.1 - TITLE 24 COMPLIANCE DOCUMENTS (PRESCRIPTIVE INDOOR)
E5.2 - TITLE 24 COMPLIANCE DOCUMENTS (PRESCRIPTIVE OUTDOOR)
E5.3 - TITLE 24 COMPLIANCE DOCUMENTS (PRESCRIPTIVE POWER DISTRIBUTION)
E5.4 - TITLE 24 COMPLIANCE DOCUMENTS (PRESCRIPTIVE SOLAR AND BATTERY)
E6.1-E6.3 - ELECTRICAL DETAILS (3 SHEETS)
E7.1 - PV SINGLE LINE DIAGRAM
E7.2 - PV SITE PLAN
E7.3 - PV PLAN ENLARGED
E7.4 - PV SIGNAGE SHEET
E7.5 - PV CUT SHEETS

SHEET INDEX

STK ARCHITECTURE, INC.
42095 ZEVO DR., TEMECULA, CALIFORNIA 92590-3780
Phone: 951.296.9110 Fax: 951.296.6079 Email: stk@stkinc.com

CONSULTANT:

REVIEWED FOR CODE COMPLIANCE

THESE PLANS AND DOCUMENTS HAVE BEEN REVIEWED AND FOUND TO BE IN COMPLIANCE WITH THE 2022 CALIFORNIA CODES AS ADOPTED BY THE JURISDICTION. ISSUANCE OF A PERMIT DOES NOT WAIVE REQUIREMENTS SUBJECT TO APPROVAL BY OTHER DEPARTMENTS AND ANY NOTED CONDITIONS. THE ISSUANCE OF A PERMIT BASED ON THESE PLANS AND DOCUMENTS DOES NOT PREVENT THE APPROVAL OF ANY VIOLATIONS WHICH ARE FOUND TO EXIST AND STANDARDS. NOR RELIEVE THE OWNER, DESIGN PROFESSIONAL OF RECORD, OR CONTRACTOR OF RESPONSIBILITY FOR COMPLIANCE WITH APPLICABLE CODES AND STANDARDS. THESE DOCUMENTS DOES NOT AUTHORIZE CONSTRUCTION SUSPENDED IN VIOLATION OF ANY FEDERAL, STATE OR LOCAL REGULATIONS.

BUILDING BUREAU SUBMITTAL REVIEWED BY: STEVEN M. PS, CASp

THIS SET OF THE PLANS AND SPECIFICATIONS MUST BE KEPT ON THE JOB SITE AT ALL TIMES IT IS UNLAWFUL TO MAKE ANY CHANGES OR ALTERATIONS ON THE PLANS WITHOUT AUTHORIZATION FROM THE ARCHITECT. IT IS UNLAWFUL TO REPRODUCE THESE PLANS WITHOUT PERMISSION OF THE ARCHITECT. ALL RIGHTS RESERVED BY ARCHITECT. © COPYRIGHT STK ARCHITECTURE, SOLUTIONS INC.

PROJECT ADMINISTERED BY:
CITY OF PERRIS

101 NORTH "D" STREET
PERRIS, CA 92570

PROJECT NAME:
FIRE STATION 105 AND ADMINISTRATION BUILDING

PROJECT CIP: F077

2495 MURRIETA ROAD
PERRIS, CA 92585

ISSUE INFORMAT

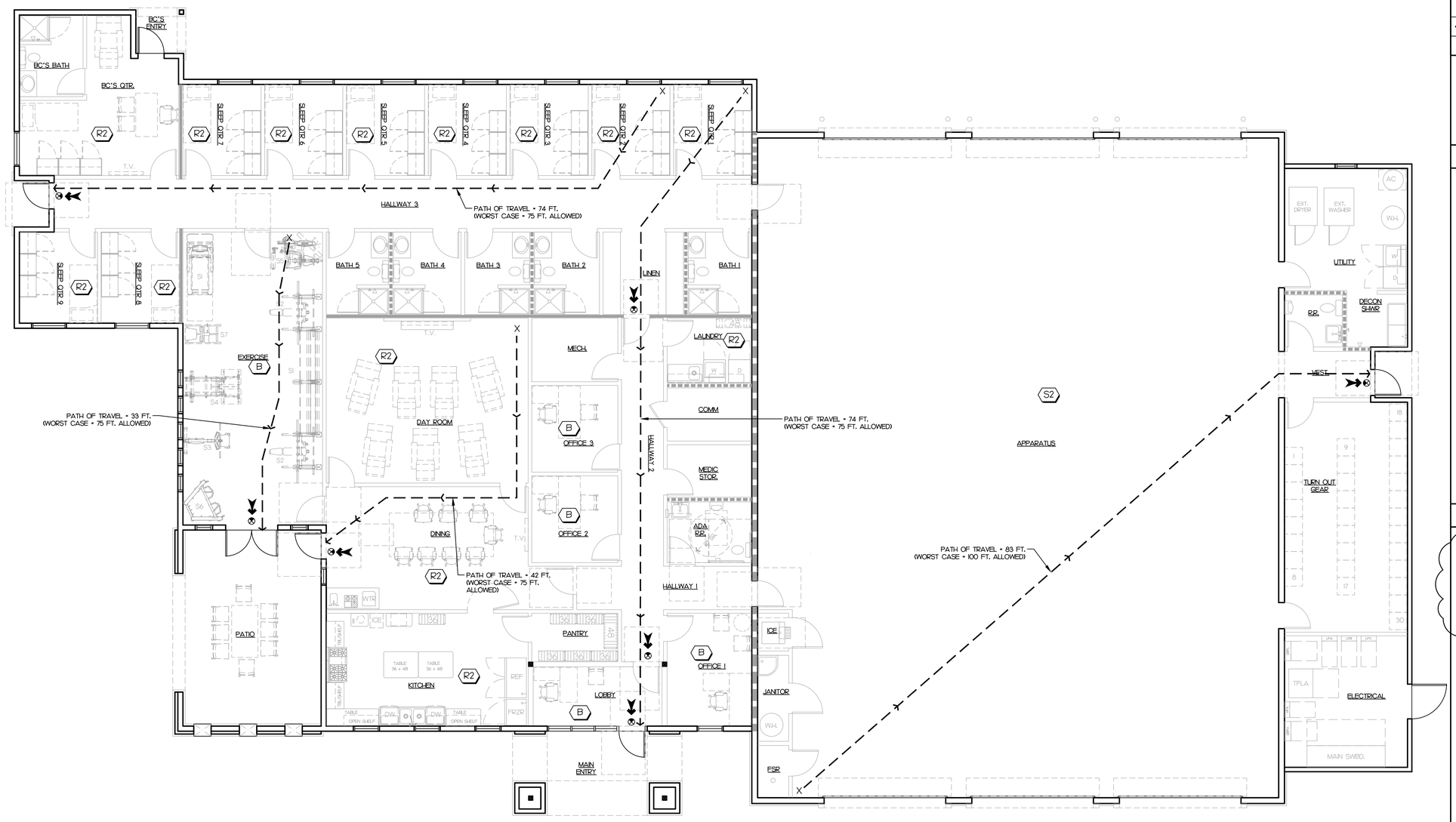

ALLOWABLE AREA CALCULATION PER TABLE 503-504-505
(NON-SEPARATED OCCUPANCY)

OCCUPANCY GROUP	CONSTRUCTION TYPE	ALLOWABLE HEIGHT OF BUILDING (CBC TABLES 504.3 & 504.4)		ALLOWABLE HEIGHT INCREASE FOR AUTOMATIC FIRE SPRINKLERS (CBC TABLES 504.3 & 504.4)	ACTUAL HEIGHT		ALLOWABLE BUILDING AREA PER FLOOR (CBC TABLE 506.2)	ALLOWABLE BUILDING AREA PER FLOOR W/ AUTOMATIC FIRE SPRINKLERS (CBC TABLE 506.2)	ALLOWABLE BUILDING AREA INCREASE BASED ON FRONTAGE (CBC TABLE 506.2)	ACTUAL BUILDING AREA (SF)	ALLOWABLE BUILDING AREA FOR MIXED OCCUPANCIES (CBC SECTION 508.4.2)
		# STORIES	HT.		# STORIES	HT.		AT			
B	V-B	3	60'	NOT USED	1	20'-7"	NOT USED	36,000	NOT USED	1,673	NOT USED
R2		3	60'			20'-7"		28,000		3,050	
S2		3	60'			27'-6"		54,000		4,006	
								TOTAL BUILDING		8,729	

NOTE: THE MOST RESTRICTIVE REQUIREMENTS GOVERN ALL BUILDING OCCUPANCIES

EGRESS LEGEND

Symbol	Remarks
00	ROOM SPACE OCCUPANT LOAD
A3	OCCUPANCY GROUP
0.0	EXIT FLOW BASED ON OCCUPANT LOAD
	PATH OF TRAVEL / EGRESS ROUTE
	EXIT SIGN

AREA
275 SF/50 = OCCUPANT LOAD
LOAD FACTOR

TYPICAL DOOR CLEARANCE

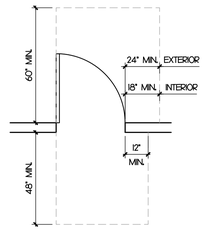

NOTES:

- ALL EXIT/ACCESS DOORS SHALL BE MARKED BY AN APPROVED EXIT SIGN, READILY VISIBLE FROM ANY DIRECTION OF EGRESS TRAVEL.
- DOORS IN THE MEANS OF EGRESS SYSTEM TO BE OPERABLE FROM THE INSIDE WITHOUT USE OF A KEY OR ANY SPECIAL KNOWLEDGE OR EFFORT.

OCCUPANT LOAD

APPARATUS (S2 OCCUPANCY)

OFFICES (B OCCUPANCY)

SLEEP QUARTERS / LIVING (R2 OCCUPANCY)

OCCUPANT LOAD = 10 (PROFESSIONAL FIRE FIGHTERS)

PLUMBING FIXTURES COUNT ANALYSIS

1. TOTAL BUILDING AREA (R2): 4,964 SF
2. OCCUPANCY LOAD = 10 (PROFESSIONAL FIRE FIGHTERS)
3. TABLE 422.1 (R2 - EMPLOYEE USE)

(REQUIRED)	W/C	URINALS	LAVS	DRINKING FOUNTAIN	SERVICE SINK
WOMEN	1	-	1		
MEN	1	1	1	*0	1

*BOTTLE FILLING STATIONS, KITCHEN SINKS ARE AVAILABLE IN PLACE OF DRINKING FOUNTAINS IN GROUP B, CPC 415.2

STK
ARCHITECTURE INC.
42095 ZEVO DR., TEMECULA, CALIFORNIA 92590-3780
Phone: 951.296.9110 Fax: 951.296.6079 Email: stk@stkinc.com

CONSULTANT:

REVIEWED FOR CODE COMPLIANCE

THESE PLANS AND DOCUMENTS HAVE BEEN REVIEWED AND FOUND TO BE IN COMPLIANCE WITH THE CODES ADOPTED BY THE CITY OF PERRIS JURISDICTION. ISSUANCE OF A PERMIT IS RECOMMENDED, SUBJECT TO APPROVAL BY OTHER DEPARTMENTS AND ANY NOTED CONDITIONS. THE REVIEW AND APPROVAL OF THESE PLANS AND DOCUMENTS AND THE ISSUANCE OR APPROVAL OF ANY VIOLATIONS OF APPLICABLE CODES AND STANDARDS, NOR RELIEVE THE OWNER, DESIGN PROFESSIONAL OF RECORD, OR CONTRACTOR OF RESPONSIBILITY FOR COMPLIANCE WITH APPLICABLE CODES AND STANDARDS. THE DOCUMENTS DOES NOT AUTHORIZE CONSTRUCTION TO BEGIN/EXIST IN VIOLATION OF ANY FEDERAL, STATE OR LOCAL REGULATIONS.

BUILDING BUREAU ADMINISTRATION
REVIEWED BY: STEVEN MA, PE, CASp

BUILDING SOLUTIONS INC.

THIS SET OF THE PLANS AND SPECIFICATIONS MUST BE KEPT ON THE JOB SITE AT ALL TIMES IT IS UNLAWFUL TO MAKE ANY CHANGES OR ALTERATIONS ON THE SAME, WITHOUT AUTHORIZATION FROM THE CITY JURISDICTION. THIS REVIEW IS FOR CODE COMPLIANCE ONLY AND IS NOT AN APPROVAL OF PLANS, SPECIFICATIONS OR CALCULATIONS BY ALL APPLICABLE DEPARTMENTS.

PROJECT ADMINISTERED BY:
CITY OF PERRIS

101 NORTH "D" STREET
PERRIS, CA 92570

PROJECT NAME:
FIRE STATION 105
AND ADMINISTRATION
BUILDING

PROJECT CIP: F077

2495 MURRIETA ROAD
PERRIS, CA 92585

ISSUE INFORMATION:

DATE:	INFORMATION:
11-26-25	95% CD SUBMITTAL
02-05-26	1 1st PC RESPONSE
02-19-26	2 2nd PC RESPONSE

SHEET INFORMATION:

STK PROJECT NO.: 365-03-25
SCALE: AS NOTED
DATE: NOVEMBER 2025
PLOT DATE: –
DRAWN BY: JN

SEAL:

LICENSED ARCHITECT ANTONIO FINLEY No. C31476 REN. 07-31-27 STATE OF CALIFORNIA

SHEET TITLE:
EGRESS PLAN - FIRE STATION

SHEET NO.:
T1.2

J:\365-City of Perris\365-03-25 South Perris Fire Station\Architect\pua#377.2 - FS EGRESS PLAN.dwg
04/15/2026 3:34PM

EGRESS PLAN

SCALE: 3/16"=1'-0" 1

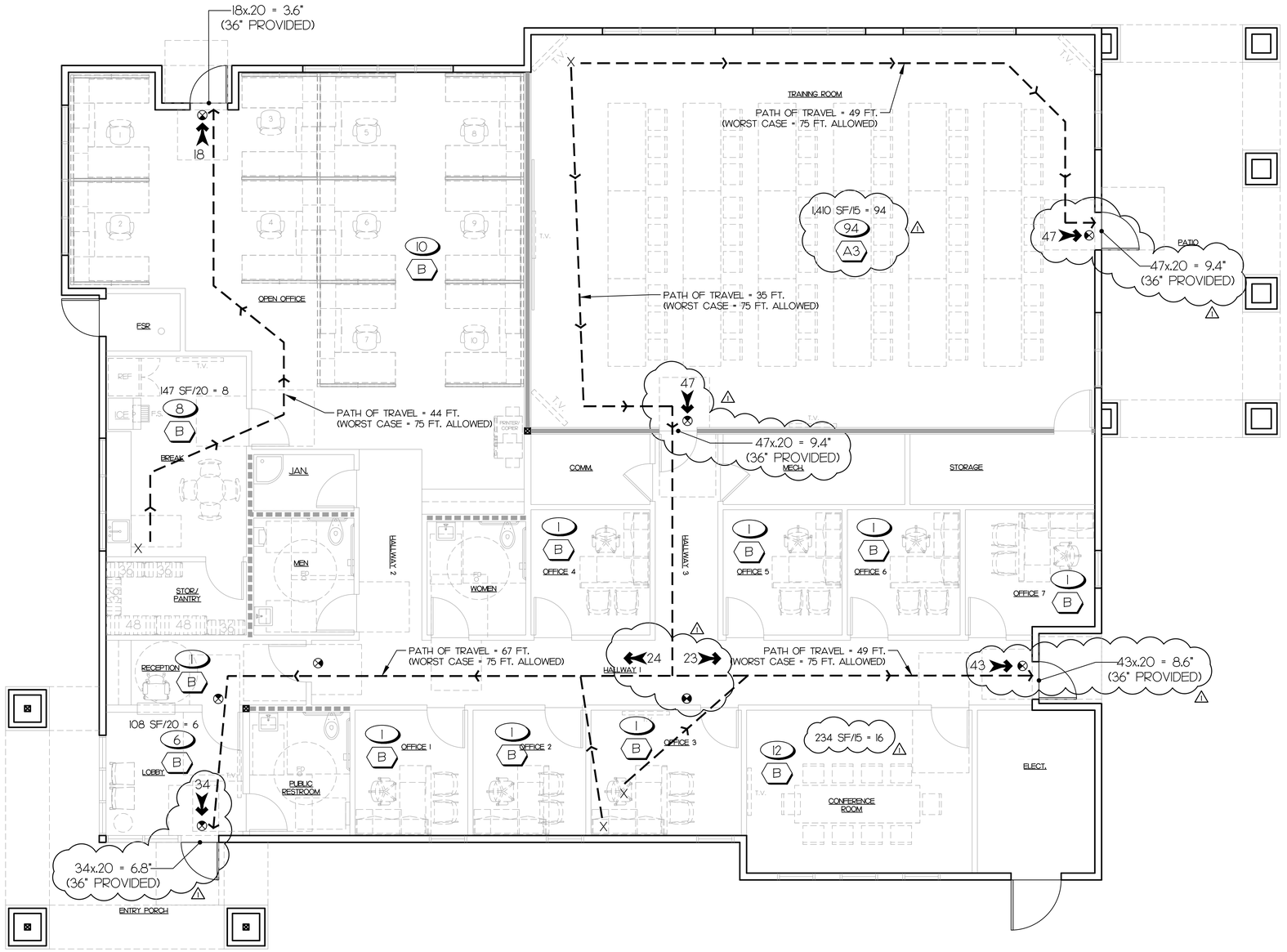

ALLOWABLE AREA CALCULATION PER TABLE 503-504-505
(NON-SEPARATED OCCUPANCY)

OCCUPANCY GROUP	CONSTRUCTION TYPE	ALLOWABLE HEIGHT OF BUILDING (CBC TABLES 504.3 & 504.4)		ALLOWABLE HEIGHT INCREASE FOR AUTOMATIC FIRE SPRINKLERS (CBC TABLES 504.3 & 504.4)	ACTUAL HEIGHT		ALLOWABLE BUILDING AREA PER FLOOR (CBC TABLE 506.2)	ALLOWABLE BUILDING AREA PER FLOOR W/ AUTOMATIC FIRE SPRINKLERS (CBC TABLE 506.2)	ALLOWABLE BUILDING AREA INCREASE BASED ON FRONTAGE (CBC TABLE 506.2)	ACTUAL BUILDING AREA (SF)	ALLOWABLE BUILDING AREA FOR MIXED OCCUPANCIES (CBC SECTION 508.4.2)
		# STORIES	HT.		# STORIES	HT.		AT			
B	V-B	3	60'	NOT USED	1	28'-8"	NOT USED	36,000	NOT USED	5,195	NOT USED

NOTE: THE MOST RESTRICTIVE REQUIREMENTS GOVERN ALL BUILDING OCCUPANCIES

EGRESS LEGEND

Symbol	Remarks
00	ROOM SPACE OCCUPANT LOAD
A3	OCCUPANCY GROUP
0.0	EXIT FLOW BASED ON OCCUPANT LOAD
	PATH OF TRAVEL / EGRESS ROUTE
	EXIT SIGN

AREA
275 SF/50 = OCCUPANT LOAD
LOAD FACTOR

TYPICAL DOOR CLEARANCE

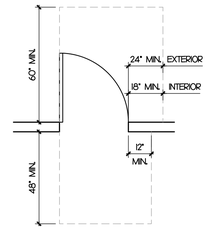

NOTES:

- ALL EXIT/ACCESS DOORS SHALL BE MARKED BY AN APPROVED EXIT SIGN, READILY VISIBLE FROM ANY DIRECTION OF EGRESS TRAVEL.
- DOORS IN THE MEANS OF EGRESS SYSTEM TO BE OPERABLE FROM THE INSIDE WITHOUT USE OF A KEY OR ANY SPECIAL KNOWLEDGE OR EFFORT.

OCCUPANT LOAD

AMIN. BUILDING (B OCCUPANCY)

LOBBY	6
RECEPTION	1
OFFICE #1	1
OFFICE #2	1
OFFICE #3	1
OFFICE #4	1
OFFICE #5	1
OFFICE #6	1
OFFICE #7	1
OPEN OFFICE	10
CONFERENCE ROOM	12
BREAK	8
TRAINING	94
GRAND TOTAL	138

PLUMBING FIXTURES COUNT ANALYSIS

1. TOTAL BUILDING AREA= 5,195 SF
2. OCCUPANCY LOAD FACTOR (CPC 2022, CHAPTER 4, TABLE 4.1):
   - TRAINING (ABOVE 12TH GRADE A-3) = 50: 1,410 SF/50 = 28.2
   - BUSINESS (B) = 150: 3,785 SF/150 = 25.2

   TOTAL OCCUPANT LOAD = 54 (27 MEN, 27 WOMEN)

TABLE 422.1: A-3 OR B (SAME REQ.)

(REQUIRED)	W/C	URINALS	LAVS	DRINKING FOUNTAIN	SERVICE SINK
WOMEN	2	-	1		
MEN	1	1	1	*0	1

*BOTTLE FILLING STATIONS: KITCHEN SINKS ARE AVAILABLE IN PLACE OF DRINKING FOUNTAINS IN GROUP B. CPC 415.2

STK
ARCHITECTURE
42095 ZEVO DR., TEMECULA, CALIFORNIA 92590-3780
Phone: 951.296.9110 Fax: 951.296.6079 Email: stk@stkinc.com

CONSULTANT:

REVIEWED FOR CODE COMPLIANCE

THESE PLANS AND DOCUMENTS HAVE BEEN REVIEWED AND FOUND TO BE IN COMPLIANCE WITH THE CODES AND ORDINANCES OF THE CITY OF PERRIS JURISDICTION. ISSUANCE OF A PERMIT IS RECOMMENDED, SUBJECT TO APPROVAL BY OTHER DEPARTMENTS AND ANY NOTED CONDITIONS. THE ISSUANCE OF A PERMIT BASED ON THESE PLANS AND DOCUMENTS, OR THE APPROVAL OF ANY VIOLATIONS, SHALL NOT PREVENT THE CITY FROM REQUIRING THE CORRECTION OF ERRORS, NOR RELIEVE THE OWNER, DESIGN PROFESSIONAL OF RECORD, OR CONTRACTOR OF RESPONSIBILITY FOR COMPLIANCE WITH ALL APPLICABLE CODES AND STANDARDS. REVIEW OF THESE PLANS AND DOCUMENTS DOES NOT AUTHORIZE CONSTRUCTION THAT IS REJECTED IN VIOLATION OF ANY FEDERAL, STATE OR LOCAL REGULATIONS.

BUILDING BUREAU VOLUNTEER, INC.
REVIEWED BY: STEVEN MA, PE, CASp

THIS SET OF THE PLANS AND SPECIFICATIONS MUST BE KEPT ON THE JOB SITE AT ALL TIMES DURING CONSTRUCTION. IT IS UNLAWFUL TO MAKE ANY CHANGES OR ALTERATIONS WITHOUT AUTHORIZATION FROM THE CITY. OCCUPANCY OF THE BUILDING IS NOT OFFICIAL IS GRANTED BY ALL APPLICABLE DEPARTMENTS.

STK ARCHITECTURE + SOLUTIONS INC.

PROJECT ADMINISTERED BY:
CITY OF PERRIS

101 NORTH "D" STREET
PERRIS, CA 92570

PROJECT NAME:
FIRE STATION 105
AND ADMINISTRATION
BUILDING

PROJECT CIP: F077

2495 MURRIETA ROAD
PERRIS, CA 92585

ISSUE INFORMATION:

DATE:	INFORMATION:
11-26-25	95% CD SUBMITTAL
02-05-26	1 1st PC RESPONSE
02-19-26	2 2nd PC RESPONSE
02-22-26	3 3rd PC RESPONSE
04-27-26	4 4th PC RESPONSE

SHEET INFORMATION:

STK PROJECT NO.:	365-03-25
SCALE:	AS NOTED
DATE:	NOVEMBER 2025
PLOT DATE:	–
DRAWN BY:	JN

SEAL:

LICENSED ARCHITECT
ANTONIO FINAZ
No. C31476
REN. 07-31-27
STATE OF CALIFORNIA

SHEET TITLE:
EGRESS PLAN - ADMIN. BLDG.

SHEET NO.:
T1.3

EGRESS PLAN - ADMIN. BUILDING

SCALE: 1/4"=1'-0"

8

J:\365-City of Perris\365-03-25 South Perris Fire Station\Architecture\ARCH\T1.3 - ADMIN BLDG EGRESS PLAN.dwg
05/04/2026 11:50AM

1. STORM WATER POLLUTION PREVENTION: Newly constructed projects and additions which disturb less than one acre of land shall prevent the pollution of storm water runoff from the construction activities through Local ordinances - SWPPP. The SWPPP shall be designed conforming to the State Storm Water NPDES Construction Permit and be specific to the site. CGBC Section 5.106.1

2. BICYCLE PARKING: Shall comply with the requirements of CGBC 5.106.4.1 and 5.106.4.2. Provide for short term and long term bicycle parking.

3.1 DESIGNATED PARKING for CLEAN AIR VEHICLES: Provide designated parking for low-emitting, fuel-efficient and carpool/van pool vehicles per CGBC Table 5.106.5.2, and mark CLEAN AIR VEHICLE. CGBC 5.106.5.2

3.2 ELECTRIC VEHICLE CHARGING: Provide charging space requiements, amount of spaces and identification per CGBC 5.106.5.3.1-4

4. LIGHT POLLUTION REDUCTION: Design interior and exterior lighting such that zero direct-beam illumination leaves the building site. CGBC 5.106.8

5. GRADING and PAVING: The site shall be planned and developed to keep surface water from entering building. CGBC 5.106.10

6. ENERGY EFFICIENCY: California Energy Code [DSA-SS]. For the purposes of mandatory energy efficiency standards in this code, the California Energy Commission will continue to adopt mandatory building standards. CGBC 5.201.1

7. WATER CONSERVING FIXTURES: Plumbing fixtures and fittings shall meet the Standards Referenced in table 5.303.3.
Reduce potable water use by at least 20 percent. CGBC 5.303.2

8. OUTDOOR WATER USE: The provisions of Section 5.304, Outdoor Water Use reference the mandatory Model Water Efficiency Landscape Ordinance (MWELO) contained within Chapter 2.7, Division 2, Title 23, California Code of Regulations.

9. OUTDOOR WATER USE: REHABILITATED LANDSCAPE PROJECTS EQUAL TO OR GREATER THAN 2,500 SQUARE FEET. Rehabilitated landscape project with an aggregate landscape area equal to or greater than 2.500 square feet requiring a building or landscape permit, plan check, or design review shall comply with CGBC 5.304.2, Item 1 or 2.

10. OUTDOOR WATER USE: Areas equal to or greater than 500 SF. When water is used for outdoor irrigation for new construction projects with an aggregate landscape area equal to or greater than 500 square feet requiring a building or landscape permit, plan check or design review, one of the following shall apply: A local water efficient landscape ordinance that is, based on evidence in the record, at least as effective in conserving water as the updated model ordinance adopted by the Department of Water Resouces (DWR) per Government Code Section 65595(c).The California Department of Water Resources Model Water Efficient Landscape Ordinance (MWELO) commencing with Section 490 of Chapter 2.7, Division 2, Title 23, California Code of Regulations.CGBC 5.304.2

11. OUTDOOR WATER USE IN LANDSCAPE AREAS 2,500 SF and Less: Any project with an aggregate area of 2,500 square feet of less may comply with the performance requirements of MWELO or conform to the prescriptive compliance measures contained in MWELO's Appendix D. CGBC 5.304.4

12. Automatic irrigation controllers that are weather- or soil moisture-based shall be installed at the time of final inspection. CGBC 5.304.3.1

13. SPRINKLERS: Sprinklers shall be designed to prevent spray on structures CGBC 5.407.2.1

14. ENTRIES AND OPENINGS: Exterior entries and openings shall be designed to prevent water intrusion into buildings. CGBC 5.407.2.2.1 Install flashing integrated with a drainage plane. CGBC 5.407.2.2.2

15. CONSTRUCTION WASTE REDUCTION: Reduce construction waste by recycling or salvaging for re-use a minimum of 65 percent of the nonhazardous construction and demolition debris, or meet the local construction and demolition waste management ordinance, whichever is more stringent. CGBC 5.408.3

16. CONSTRUCTION WASTE REDUCTION: A construction waste management plan shall be provided prior to start of construction. CGBC 5.408.1.1

17. CONSTRUCTION WASTE REDUCTION: Provide a construction waste management plan and documentation which complies with CGBC 5.408.1.1

18. EXCAVATED SOIL and LAND CLEARING DEBRIS: 100% of trees, stumps, rocks, and associated vegetation and soils resulting primarily from land clearing shall be reused or recycled. CGBC 5.408.4

19. RECYCLING BY OCCUPANTS: Readily accessible areas for recycling paper, corrugated cardboard, glass, plastics and metals shall be provided to serve the entire building CGBC 5.410.1

20. Provide commisioning requirements as listed. Include owner's project requirement, basis of design, commissioning plan, and all other requirements per CGBC 5.410.2.1-2

21. POLLUTANT CONTROL: All duct openings and other air distribution component openings shall be protected during storage on the construction site until final start-up with tape, plastic, sheet metal, or other acceptable methods to reduce the amount of dust and debris which may collect in the system. CGBC 5.504.3

22. FINISH MATERIAL POLLUTANT CONTROL: Adhesives, adhesive bonding primers, adhesive primers, sealants, sealant primers, and caulks shall comply with local or regional air pollution control or air quality management district rules where applicable, or SCAQMD Rule 1168 VOC limits and prohibition on the use of certain toxic chemicals, except per subsection 2. CGBC 5.504.4.1, subsection 1

23. ADHESIVES, SEALANTS AND CAULKS: Aerosol adhesives, smaller unit sizes of adhesives, and sealant or caulking compounds (in units of product, less packing, which do not weigh more than 1 pound and do not consist of more than 16 fluid ounces) shall comply with statewide VOC standards and other requirements, including prohibitions on the use of certain toxic compounds, of CCR, Title 17, commencing with Section 94507. CGBC 5.504.4.1, subsection 2

24. PAINTS AND COATINGS: VOC Content Limits for Architectural Coatings (Architectural Paints) shall comply with CGBC Table 5.504.4.3, unless more stringent local limits apply. CGBC 5.504.4.3

25. PAINTS AND COATINGS: Aerosol paints and coatings shall meet the requirements of Sections 94522(a)(3), 94522(c)(2), and (d)(2) of California Code of Regulations, Title 17 commencing with Section 94520. CGBC 5.504.4.3.1)

26. CARPET SYSTEMS: Carpets shall meet one of the following: 1. Carpet and Rug Institute's Green Label Plus Program, 2. California Department of Public Health Standard Practice for the testing of VOCs (Specification 01350), 3. NSF/ANSI 140 at the Gold Level. 4. Scientific Certifications Systems Indoor AdvantageTM Gold. CGBC 5.504.4.4

27. CARPET SYSTEMS: Carpet cushion shall meet the requirements of the Carpet and Rug Institute Green Label Program, carpet adhesive shall meet the requirements of Table 5.504.4.1
CGBC 5.504.4.4.1, 5.504.4.4.2

28. COMPOSITE WOOD PRODUCTS: Hardwood plywood, particleboard, and medium density fiberboard composite wood products shall meet the requirements for Formaldehyde Limits in Table 5.504.4.5. and as specified AN ARBs Air Toxics Control Measure for Composite Wood. GBC 5.504.4.5

29. RESILIENT FLOORING SYSTEMS: At least 80 percent of the floor area shall comply with VOC emission limits defined in the 2009 Collaborative for High Performance Schools (CHPS) Low-emitting Materials List or certified under the Resilient Floor Covering Institute (RFCI) FloorScore program. CGBC 5.504.4.7

30. DOCUMENTATION/VERIFICATION of COMPLIANCE: Pollutant control documentation shall be provided to indicate compliance with Section 5.504 and shall include at least one of the following: Product certifications and specifications, chain of custody certifications, or other methods acceptable to the enforcing agency. CGBC 5.504.4.5.2

31. FILTERS: Provide filters with a Minimum Efficiency Reporting Value (MERV) of at least 8 for outside and return air in regularly occupied areas of mechanically ventilated buildings. CGBC 5.504.5.3

32. ENVIRONMENTAL TOBACCO SMOKE: Where outdoor areas are provided for smoking, prohibit smoking within 25 feet of building entries, outdoor air intakes, and operable windows and in buildings. Meet additional and more stringent requirements in applicable ordinances, regulations, and policies. CGBC 5.504.7

33. INDOOR MOISTURE CONTROL: buildings shall comply with CBC Section 1203 (Ventilation) and Chapter 14 (Exterior Walls). CGBC 5.505 Also refer to the requirements of CGBC 5.407 that reference CBC Section 1403.2 (Weather Protection), CEC section 150 (Mandatory Features and Devices), and text indicating the proper design of sprinklers and building openings shall help assure water remains outside the building. CGBC 5.505.1 31. For indoor air quality, meet the requirements of the CEC for outside air delivery and carbon dioxide monitoring. CGBC 5.506

34. HVAC, refrigeration, and fire-suppression equipment shall not contain CFCs or Halon. CGBC 5.508

35. Provide an operation and maintenance manual with content per 5.410.4.5 (when new construction is over 10,000SF) and in a format acceptable to the Enforcing Agency - shall be placed in the building at the time of Final Inspection. CGBC 5.410.4.5

36. ENVIRONMENTAL COMFORT: Roof and wall assemblies exposed to noise sources shall have an STC rating of at least 50, with exterior windows having a minimum of 40 in the following locations, per CBGC 5.507.4 (or as directed by the Building Official):

a) Within the 65 CNEL Noise Contour of a freeway, railroad or industrial source, as determined by the jurisdiction"s Noise Element of the General Plan.
b) Within the 65 CNEL contour of an airport.

37. OUTDOOR AIR QUALITY: Ozone Depletion and Greenhouse Gas Reductions. installations of HVAC, Refrigeration and Fire Suppression Equipment shall comply with SECTIONS 5.508.1.1 AND 5.508.1.2.

38. 5.508.1.1 CHLOROFLUOROCARBONS (CFCS). INSTALL HVAC, REFRIGERATION AND FIRE SUPPRESSION EQUIPMENT THAT DO NOT CONTAIN CFCS.

39. 5.508.1.2 HALONS. INSTALL HVAC, REFRIGERATION AND FIRE SUPPRESSION EQUIPMENT THAT DO NOT CONTAIN HALONS.

04/14/2026 1:49PM J:\365-City of Perris\365-03-25 South Perris Fire Station\Architectural\0T1.4 - CAL GREEN.dwg

CA GREEN BUILDING CODE REQUIREMENTS

A5.602
***CALGreen* VERIFICATION GUIDELINES**
MANDATORY MEASURES CHECKLIST
2022 CALGreen Code with July 1, 2024 Supplement

Application: This checklist shall be used for nonresidential projects that meet one of the following: new construction, building additions of 1,000 square feet or greater, or building alterations with a permit valuation of $200,000 or more pursuant to Section 301.3 AND do not trigger a Tier 1 or Tier 2 requirement:

Y = Yes (section has been selected and/or included)
N/A = Not Applicable (code section does not apply to the project—mainly used for additions and alterations)
O = Other (provide explanation)
[N] = New construction pursuant to Section 301.3
[A] = Additions and/or Alterations pursuant to Section 301.3

Chapter 5 Divisions

DIVISION 5.1 Planning and Design

Requirement	SECTION TITLE	CODE SECTION	Y	N	N/A	O	PLAN SHEET, SPEC, OR ATTACH REFERENCE
Mandatory	Deconstruction and reuse of existing structures, Scope with Exception	5.105.1		X			
Mandatory	Reuse of existing building & Verification of compliance with note	5.105.2 and 5.105.2.1		X			
Mandatory	Storm water pollution prevention for projects that disturb less than 1 acre of land	5.106.1 through 5.106.2			X		
Mandatory	Short-term bicycle parking (with exception)	5.106.4.1.1	X				T1.4
Mandatory	Long-term bicycle parking	5.106.4.1.2 through 5.106.4.1.5			X		
Mandatory	Electric vehicle (EV) charging [N] with Section 5.106.3.1, 5.106.5.3.2 and associated Table 5.106.5.3.1 OR	5.106.5.3.1, 5.106.5.3.2, Table 5.106.5.3.1, 5.106.5.3.2.1, 5.106.5.3.2.2, 5.106.5.3.3, 5.106.5.3.4 and 5.106.5.3.5.	X				T1.4
	Power Allocation Method: Section 5.106.5.3.6 and associated Table 5.106.5.3.6	OR 5.106.5.3.6, Table 5.106.5.3.6 5.106.5.3.3, 5.106.5.3.4 and 5.106.5.3.5			X		
Mandatory	Additions or Alterations to existing buildings or parking facilities [A] with Exceptions	5.106.5.4			X		
Mandatory	Existing buildings or parking areas without previously installed EV capable infrastructure [A].	5.106.5.4.1			X		
Mandatory	Existing buildings or parking areas with previously installed EV capable infrastructure [A].	5.106.5.4.2			X		
Mandatory	Electric vehicle (EV) charging: medium-duty and heavy-duty [N]	5.106.5.5			X		
Mandatory	Electric vehicle charging readiness requirements for warehouses, grocery stores and retail stores with planned off-street loading spaces [N]	5.106.5.5.1			X		
Mandatory	TABLE 5.106.5.5.1	5.106.5.5 and 5.106.5.5.1	X				T1.4
Mandatory	Light pollution reduction [N] (with exceptions, notes and table)	5.106.8 through 5.106.8.2			X		
Mandatory	Grading and paving (exception for additions and alterations not altering the drainage path)	5.106.10	X				T1.4

DIVISION 5.2 Energy Efficiency

Requirement	SECTION TITLE	CODE SECTION	Y	N	N/A	O	PLAN SHEET, SPEC, OR ATTACH REFERENCE
Mandatory	Meet the minimum energy efficiency standard	5.201.1	X				T1.4

DIVISION 5.3 Water Efficiency and Conservation

Requirement	SECTION TITLE	CODE SECTION	Y	N	N/A	O	PLAN SHEET, SPEC, OR ATTACH REFERENCE
Mandatory	Separate meters (new buildings or additions > 50,000 sfthat consume more than 100 gal/day)	5.303.1.1			X		
Mandatory	Separate meters (for tenants in new buildings or additions that consume more than 1,000 gal/day)	5.303.1.2			X		
Mandatory	Water closets shall not exceed 1.28 gallons per flush (gpf)	5.303.3.1	X				PO.1
Mandatory	Wall-mounted urinals shall not exceed 0.125 gpf	5.303.3.2.1	X				PO.1
Mandatory	Floor-mounted urinals shall not exceed 0.5 gpf	5.303.3.2.2					
Mandatory	Single showerhead shall have maximum flow rate of 1.8 gpm (gallons per minute) at 80 psi	5.303.3.3.1	X				PO.1
Mandatory	Multiple showerheads serving one shower shall have acombined flow rate of 1.8 gpm at 80 psi	5.303.3.3.2			X		
Mandatory	Nonresidential lavatory faucets	5.303.3.4.1			X		
Mandatory	Kitchen faucets	5.303.3.4.2			X		
Mandatory	Wash fountains	5.303.3.4.3			X		
Mandatory	Metering faucets	5.303.3.4.4			X		
Mandatory	Metering faucets for wash fountains	5.303.3.4.5			X		
Mandatory	Pre-rinse spray valve	5.303.3.4.6			X		
Mandatory	Food waste disposers	5.303.4.1			X		
Mandatory	Areas of additions or alterations	5.303.5			X		
Mandatory	Standards for plumbing fixtures and fittings	5.303.6	X				T1.4
Mandatory	Outdoor potable water use in landscape areas (with notes)	5.304.1	X				T1.4

DIVISION 5.4 Material Conservation and Resource Efficiency

Requirement	SECTION TITLE	CODE SECTION	Y	N	N/A	O	PLAN SHEET, SPEC, OR ATTACH REFERENCE
Mandatory	Weather protection	5.407.1	X				T1.4
Mandatory	Moisture control: sprinklers	5.407.2.1	X				T1.4
Mandatory	Moisture control: exterior door protection	5.407.2.2.1	X				T1.4
Mandatory	Moisture control: flashing	5.407.2.2.2	X				T1.4
Mandatory	Construction waste management—comply with either: Sections 5.408.1.1, 5.408.1.2, 5.408.1.3 or more stringent local ordinance	5.408.1.1, 5.408.1.2, 5.408.1.3	X				T1.4
Mandatory	Construction waste management: documentation	5.408.1.4	X				T1.4
Mandatory	Universal waste [A]	5.408.2			X		
Mandatory	Excavated soil and land clearing debris (100% reuse orrecycle) with Exception and Notes	5.408.3	X				T1.4
Mandatory	Life Cycle Assessment, Scope, Whole building life cycle assessment with Notes, Building components, Reference study period, and Verification of compliance	5.409.1, 5.409.2, 5.409.2.1, 5.409.2.2 and 5.409.2.3			X		
Mandatory	Life Cycle Assessment, Scope, Product GWP compliance – prescriptive path, 5.409.3.1 with Exception and Exception EQUATION, Verification of compliance and Product GWP Limits Table with Footnotes	5.409.1, 5.409.3, 5.409.3.1, 5.409.3.2 and Table 5.409.3			X		
Mandatory	Recycling by occupants (with exception)	5.410.1	X				T1.4
Mandatory	Recycling by occupants: additions (with exception)	5.410.1.1			X		
Mandatory	Recycling by occupants: sample ordinance	5.410.1.2	X				T1.4
Mandatory	Commissioning new buildings (≥ 10,000 sf) [N]	5.410.2			X		
Mandatory	Owner's or owner representative's Project Requirements (OPR) [N]	5.410.2.1			X		
Mandatory	Basis of Design (BOD) [N]	5.410.2.2			X		
Mandatory	Commissioning plan [N]	5.410.2.3			X		
Mandatory	Functional performance testing [N]	5.410.2.4			X		
Mandatory	Documentation and training [N]	5.410.2.5			X		
Mandatory	Systems manual [N]	5.410.2.5.1			X		
Mandatory	Systems operation training [N]	5.410.2.5.2			X		
Mandatory	Commissioning report [N]	5.410.2.6			X		
Mandatory	Testing and adjusting for new buildings < 10,000 sf ornew systems that serve additions or alterations [A]	5.410.4	X				MO.1
Mandatory	System testing plan for renewable energy, landscapeirrigation and water reuse [A]	5.410.4.2	X				MO.1
Mandatory	Procedures for testing and adjusting	5.410.4.3	X				MO.1
Mandatory	Procedures for HVAC balancing	5.410.4.3.1	X				MO.1
Mandatory	Reporting for testing and adjusting	5.410.4.4	X				
Mandatory	Operation and maintenance (O&M) manual	5.410.4.5	X				MO.1
Mandatory	Inspection and reports	5.410.4.5.1	X				MO.1

DIVISION 5.5 Environmental Quality

Requirement	SECTION TITLE	CODE SECTION	Y	N	N/A	O	PLAN SHEET, SPEC, OR ATTACH REFERENCE
Mandatory	Fireplaces	5.503.1			X		
Mandatory	Woodstoves	5.503.1.1			X		
Mandatory	Temporary ventilation	5.504.1	X				
Mandatory	Covering of ducts openings and protection of mechanical equipment during construction	5.504.3	X				MO.1
Mandatory	Adhesives, sealants, and caulks	5.504.4.1	X				T1.4
Mandatory	Paints and coatings	5.504.4.3	X				T1.4
Mandatory	Aerosol paints and coatings	5.504.4.3.1			X		
Mandatory	Aerosol paints and coatings: verification	5.504.4.3.2	X				T1.4
Mandatory	Carpet systems	5.504.4.4	X				T1.4
Mandatory	Carpet cushion	5.504.4.4.1			X		
Mandatory	Carpet adhesives per Table 5.504.4.1	5.504.4.4.2	X				T1.4
Mandatory	Composite wood products	5.504.4.5			X		
Mandatory	Composite wood products: documentation	5.504.4.5.3			X		
Mandatory	Resilient flooring systems	5.504.4.6	X				T1.4
Mandatory	Resilient flooring: verification of compliance	5.504.4.6.1	X				T1.4
Mandatory	Thermal insulation	5.504.4.7	X				T1.4
Mandatory	Verification of compliance	5.504.4.7.1	X				T1.4
Mandatory	Acoustical ceilings and wall panels	5.504.4.8	X				T1.4
Mandatory	Verification of compliance	5.504.4.8.1	X				T1.4
Mandatory	Filters (with exceptions)	5.504.5.3	X				T1.4
Mandatory	Filters: labeling	5.504.5.3.1	X				T1.4
Mandatory	Environmental tobacco smoke (ETS) control	5.504.7	X				T1.4
Mandatory	Indoor moisture control	5.505.1	X				T1.4
Mandatory	Outside air delivery	5.506.1	X				T1.4
Mandatory	Carbon dioxide (CO2) monitoring	5.506.2	X				T1.4
Mandatory	Acoustical control (with exception)	5.507.4			X		
Mandatory	Exterior noise transmission, prescriptive method (with exceptions)	5.507.4.1			X		
Mandatory	Noise exposure where noise contours are not readily available	5.507.4.1.1	X				T1.4
Mandatory	Performance method	5.507.4.2			X		
Mandatory	Site features	5.507.4.2.1			X		
Mandatory	Documentation of compliance	5.507.4.2.2			X		
Mandatory	Interior sound transmission (with note)	5.507.4.3	X				T1.4
Mandatory	Ozone depletion and greenhouse gas reductions	5.508.1	X				T1.4
Mandatory	Chlorofluorocarbons (CFCs)	5.508.1.1	X				T1.4
Mandatory	Halons	5.508.1.2	X				T1.4
Mandatory	Supermarket refrigerant leak reduction for retail food stores 8,000 square feet or more	5.508.2 through 5.508.2.6.3			X		
	END OF MANDATORY PROVISIONS						

Documentation Author's / Responsible Designer's Declaration Statement	
☐ **Mandatory:** I attest that this mandatory provisions checklist is accurate and complete.	
Signature:	
Company:	Date:
Address:	License:
City/State/Zip:	Phone:

CAL GREEN CHECKLIST

STK ARCHITECTURE, INC.

42095 ZEVO DR., TEMECULA, CALIFORNIA 92590-3780
Phone: 951.296.9110 Fax: 951.296.6079 Email: stk@stkinc.com

CONSULTANT:

REVIEWED FOR CODE COMPLIANCE

THESE PLANS AND DOCUMENTS HAVE BEEN REVIEWED AND FOUND TO BE IN COMPLIANCE WITH THE APPLICABLE CODE REQUIREMENTS OF THE JURISDICTION. ISSUANCE OF A PERMIT IS RECOMMENDED, SUBJECT TO APPROVAL BY OTHER DEPARTMENTS AND ANY NOTED CONDITIONS. THE STAMPING OF THESE PLANS SHALL NOT BE HELD TO PERMIT OR BE AN APPROVAL OF ANY VIOLATION OF APPLICABLE CODES AND STANDARDS, NOR RELIEVE THE OWNER, DESIGN PROFESSIONAL OF RECORD, OR CONTRACTOR OF COMPLIANCE WITH THE APPLICABLE CODES AND STANDARDS. PLAN REVIEW OF DOCUMENTS DOES NOT AUTHORIZE CONSTRUCTION TO PROCEED IN VIOLATION OF ANY FEDERAL, STATE, OR LOCAL REGULATION.

BUILDING BUREAU SOLUTIONS, INC.
REVIEWED BY: STEVE KIM, PE, CASp

THIS SET OF THE PLANS AND SPECIFICATIONS MUST BE KEPT ON THE JOB SITE AT ALL TIMES AND IT IS UNLAWFUL TO MAKE ANY CHANGES OR ALTERATIONS WITHOUT PERMISSION FROM THE CITY. OCCUPANCY OF STRUCTURE(S) IS NOT PERMITTED UNTIL FINAL APPROVAL IS GRANTED BY ALL APPLICABLE DEPARTMENTS.

BBS BUILDING BUREAU SOLUTIONS INC.

PROJECT ADMINISTERED BY:
CITY OF PERRIS

101 NORTH "D" STREET
PERRIS, CA 92570

PROJECT NAME:
FIRE STATION 105 AND ADMINISTRATION BUILDING

PROJECT CIP: F077

2495 MURRIETA ROAD
PERRIS, CA 92585

ISSUE INFORMATION:

DATE:	INFORMATION:
11-26-25	95% CD SUBMITTAL
02-05-26	△1 1st PC RESPONSE
02-19-26	△2 2nd PC RESPONSE

SHEET INFORMATION:

STK PROJECT NO.: 365-03-25
SCALE: AS NOTED
DATE: NOVEMBER 2025
PLOT DATE: –
DRAWN BY: JN

SEAL:

LICENSED ARCHITECT ANTONIO FINALDI No. C31476 REN. 07-31-27 STATE OF CALIFORNIA

SHEET TITLE:
CAL GREEN

SHEET NO.:
T1.4

MEMO

Date: January 15, 2026

To: Nathan Perez, Senior Planner

From: Liset Hernadez, Public Works Manager

By: Chris Baldino, Landscape Inspector

Subject: Public Works Conditions for ADPR26-00001
A proposal to construct a 10,920 sq. Ft. Fire station, 5,195 sq. Ft. administration office building, and two storage facilities totaling 1,000 sq. ft. located at 2495 Murrieta Road within the Public zone of the Green Valley Specific Plan.

---

1. **Dedication and/or Landscape Maintenance Easement.** Offer of Dedication and Landscape Maintenance Easement for City landscape maintenance district shall be provided as follows:
   - **Murrieta Ave -** Provide offer of dedication as needed for a full half width Street (94'ROW), curb gutter, sidewalk, and off-site landscaping requirements, per City General Plan, including a minimum 12' public parkway from face of curb.

2. **Landscape Maintenance Easement and Landscape Easement Agreement -** The developer shall provide, for review and approval, an Offer of Dedication and certificate of acceptance, complete with a legal plat map and legal description to the City of Perris. In addition, if required by the City of Perris, the Developer shall provide a landscape easement and Landscape easement agreement, acceptable to the City of Perris. The City shall record the same with the Riverside County Recorder's Office, and the recorded instrument shall be returned to the City Clerk of the City of Perris for filing, if needed.

3. **Landscaping Plans** – Provide an electronic copy of Construction Landscaping and Irrigation Plans for the off-site landscaping, including any medians or other landscape areas along the dedications shall be submitted to the Planning Department for approval and shall be accompanied by the appropriate filing fee. The landscape and irrigation

plan shall be prepared by a registered landscape architect and conform to the requirements of Chapter 19.70 of the Municipal Code. The location, number, genus, species, and container size of the plants shall be shown. This landscape plan shall be titled "Off-site Landscape Plan for ADPR26-00001" and shall be exclusive of any private property, on-site landscaping. Elements of the Landscape Plan shall include but not be limited to:

a. **Landscape Limits** – Limits of right-of-way areas or easement areas, defined by concrete mow curbs, fully dimensioned, that are to be annexed into the Landscape Maintenance District. A planting palette and hardscape plan intended to meet the design intent of the Landscape Guidelines in effect for the area; or if no such guidelines exist the design intent of neighboring development, as determined by the Special Districts Division, including:
   - **Murrieta Road –** Per the Green Valley Streetscape Landscape design guidelines requirements, planting will consist of the following to match existing development to the west along Murrieta Road: Primary trees: Platanus acerifolia London plane tree, secondary tree Lagerstroemia Natchez Crape Myrtle, in alternating Groups of three. Use of drought resistant shrubs and ground cover including but not limited to the following: Dietes Bicolor, Dodonaea Viscosa Purple leafed hopseed, Muhlenbergia Capillaris Pink Muhly, Salvia Greggii Furmans's Red, Westringia Fruticosa Wynabbie Gem costal rosemary.

b. **Irrigation** – A list of irrigation system components intended to meet the performance, durability, water efficiency, and anti-theft requirements for Special District landscape areas as determined by the Special Districts Division. Components shall include but not be limited to Rainbird XBT-20PC w/ Diffuser, or equal on flexible PVC risers, Sentry Guard Cable Guard and Union Guard, and backflow Wilkens Model 375 (or equal). The controller shall include an ET based controller with weather station that is centrally controlled capable and wi-fi ready (Weather Trak Pro3, or equal, with Rain Sensor). At the discretion of the Special Districts Division public landscape areas utilizing no more than 6 valves/stations, programmed to irrigate consecutively, and none simultaneously, may propose the use of an alternative ET based controller with weather station that is centrally controlled capable and wi-fi ready, such as the Weathermatic System or equal. The proposed system shall be complete with wireless weather station, aircard with flow, one year bundle service, blade antenna and flow sensor, and ET programmed. Use of irrigation system

components not covered in this paragraph may be used, upon the discretionary approval of the Public Works Director.

c. **Benefit Zone Quantities** – Include a Benefit Zone quantities table (i.e. SF of planting areas, turf, number of trees, SF. of hardscape, etc.) in the lower right-hand corner of the cover sheet for off-site landscape areas, indicating the amount of landscaping the district will be required to maintain.

d. **Meters** – All electrical and water meters shall be in locations that are easily accessible to maintenance staff while not visually obtrusive in the street scene and away from street intersections. Show location of separate water and electrical utility meters intended to serve maintenance district areas exclusively. Show locations of water and electrical meter for landscaping. Show location of water and electrical meter for flood control. Show location of electrical meter for Traffic signal and street lighting district, on respective plans. Coordinate location of meters on landscape and civil engineering plan.

e. **Controllers -** The off-site irrigation controllers are to be located within the right of way (preferably within the off-site landscape area). All point of connection equipment including irrigation controller pedestals, electrical meter pedestals, and backflow preventers are to be in locations that are easily accessible to maintenance staff while not visually obtrusive in the street scene, and away from street intersections. Backflow preventers are to be screened on at least three sides with (5) gallon plant material. The fourth side shall be open to the back of the landscape area to allow the backflow cage to be opened without interference with plant materials. Backflow cages shall meet the required City of Perris Engineering Standards in effect at the time of approval.

f. **Recycled Water** - If applicable. The project landscape architect shall coordinate with EMWD to verify if the site will be served with recycled water and design all irrigation and landscape plans to meet the requirements of EMWD and provide additional irrigation components as needed.

g. **EMWD Landscape Plan Approval** – The project landscape architect shall submit a copy of all irrigation plans and specifications to EMWD for approval. The project landscape architect must confirm with EMWD that the plans have been approved by EMWD and submit written proof of approval by EMWD prior to the City approving the final Landscape Plans. Until the final landscape plan has been approved by the City of Perris, the maintenance areas depicted cannot be accepted

by the City for maintenance. The developer shall coordinate both reviews to ensure acceptability of plans by both EMWD and the City of Perris, prior to approval by either agency.

h. **Landscape Weed Barrier** - Weed cloth with a minimum expected life of 10-years shall be required under all gravel, rock, or cobble areas.

i. **Wire Mesh and Gravel at Pull Boxes -** Provide wire mesh and gravel layer within valve boxes to prevent rodent intrusion.

j. **Concrete Maintenance Band at Medians and Mortar Cobble Turn Lane** – Provide 12" wide concrete maintenance band (safety edge) around entire median. At turn pockets provide mortared cobble creek bed, round stone sized 6" to 12".

k. **Perimeter Walls Graffiti Coating –** Provide anti-graffiti coating to all perimeter walls. Acceptable products shall include Vitrocem Anti-Graffiti Coating or equal.

l. **Slopes 3:1 Maximum -** Any proposed slope will not exceed a 3:1 ratio. Slopes exceeding a 3:1 ratio shall require construction of appropriate reinforcing garden walls.

m. **SB 1383 Mulch Compliance –** All mulch procured for use on City landscape areas must be produced from green waste sourced from a permitted/registered facility under 14 CCR 18993.1(4)(B). Visit https://www2.calrecycle.ca.gov/SolidWaste/Site/Search for facility searches. Developer must turn over invoices for such mulch that identify the Direct Procurement or Direct Service Provider name.

4. **Landscape Inspections.** The project applicant shall inform the on-site project manager and the landscape contractor of their responsibility to call for only "OFF-SITE" landscape and irrigation inspections at the appropriate stages of construction. Inspections shall be scheduled for at least two working days (Monday through Friday) during normal staff hours, prior to the actual inspection. Contact Public Works Special Districts Division at (951) 657-3280 to schedule inspections.
   - **Inspection #1** – Trenches open, irrigation installed, and system pressurized to 150 PSI for four hours.
   - **Inspection #2 –** Soil prepared, and plant materials positioned and ready to plant.
   - **Inspection #3** – Landscaping installed, with all equipment and

irrigation system fully operational, including water meter and electric meter.
   - **Inspection #4 – (Turn-Over) –** Developer shall call for an inspection to allow the City to review and identify any potential irrigation system defects, dead plants, weed, debris or graffiti; stressed, diseased, or dead trees; mulch condition, hardscape or other concerns with the landscape installation; or to accept final turn over of the landscape installation. At his sole expense, the Developer shall be responsible for rectifying system and installation deficiencies. If in the opinion of the City's Landscape Inspector the landscape installation is in substantial compliance with the approved landscaping plans, the irrigation and communication system is functioning as intended, and the landscape installation is found to be acceptable to the City, then the Inspector shall recommend to the City's Special District Coordinator to accept turn-over of water and electrical accounts, wi-fi communication contracts and the entire landscape installation.

5. **Reserved.**

6. **Street/Off-Site Improvements.** The applicant shall submit street improvement plans, accompanied by the appropriate filing fee to the City Engineering Department. Details of treatments off-site improvements, including lighting, shall meet both the City Engineer's Design Guidelines, and the additional requirements of the Special Districts Division. Components shall include, but not be limited to:
   a. **Street Lighting-**If Street lighting is required; lighting shall meet the type, style, color, and durability requirements necessary for energy efficiency goals, maintenance, and longevity of improvements of the City Engineer's Office. Streetlights will be owned by City of Perris not SCE. Streetlights shall be constructed per LS-3 account billing standard, which shall include an individually metered pedestal for streetlights.
   b. **Acceptance By Public Works/Special Districts-** Lighting District facilities required by the City Engineer's Office shall be installed and fully operational and approved by final inspection by the City Engineer's Office, and the City's Consulting Traffic Signal Inspection Team (Riverside County TLMA) at (951) 955-6815. Prior to acceptance for maintenance of "Off-site" traffic signal and lighting facilities by the Public Works Special Districts Division, the developer shall contact the Public Works Special Districts Division at (951) 657-3280 to schedule the delivery of all required

turn-over submittal items. Prior to acceptance into Lighting District 84-1, coordinate turnover information pertaining to Street Lights, and Traffic Signal Electrical/SCE Service Meters with Wildan Financial Services, the City's Special Districts Consulting Firm at (951) 587-3564. (i.e. Provide electrical meter number, photo of pedestal, and coordinate "request for transfer of billing information" with SCE and City for all new service meters). Developers shall pay 18-month energy charges to the City of Perris for all off-site street lighting. Call Wildan Financial Services, Inc. for the amount due, and to obtain receipt for payment. Obtain and provide a clearance form from Riverside County TLMA indicating completion of all punch list items from traffic signal construction. Submit one large format photocopy of Traffic Signal as-built plans and timing sheets.

7. **Water Quality Management Plans.** The applicant shall submit a Preliminary and Final WQMP, accompanied by the appropriate filing fee to the Planning Department and City Engineering Department, respectively. Details for treatment control facilities shall meet both the Riverside County WQMP Design Guidelines, and the additional requirements of the Special Districts Division intended to reduce long term maintenance costs and longevity of improvements. Components shall include, but not be limited to:
   - **Storm Drain Screens-**If off-site catch basins are required by the City Engineer's Office, connector pipe screens shall be included in new catch basins to reduce sediment and trash loading within storm pipe. Connector pipe screens shall meet the type, style, and durability requirements of the Public Work's Special Districts Division.
   - **WQMP Inspections-** The project applicant shall inform the on-site project manager and the water quality/utilities contractor of their responsibility to call for both "ON-SITE" and OFF-SITE" WQMP Inspections at the appropriate stages of construction. Contact CGRM at (909) 455-8520 to schedule inspections.
   - **Acceptance By Public Works/Special Districts-**Both on-site and off-site flood control/water quality facilities required for the project, as depicted in the Final WQMP, shall be installed and fully operational, and approved by final inspection by the City's WQMP Consultant, CGRM. The Developer shall obtain a final Clearance Letter from CGRM indicating compliance with all applicable Conditions of Approval for the approved WQMP. The developer shall deliver the same to the Public Works' Special Districts Division. In addition, prior to acceptance by the City, the developer shall submit a Covenant and Agreement describing on-going maintenance

responsibilities for on-site facilities per the approved WQMP, to the Public Works Special Districts Division. The Public Works' Special Districts Division will review and approve the Covenant and Agreement. The City shall record the same with the Riverside County Recorder's Office, and the recorded instrument shall be returned to the City Clerk of the City of Perris for filing.

8. **Flood Control District #1 Maintenance Acceptance.** Flood Control District facilities required by the City Engineer's Office shall be installed and fully operational, and approved by final inspection by the City Engineer's Office. Prior to acceptance for maintenance of "Off-site" flood control facilities by the Public Works' Special Districts Division the developer shall contact the Public Works Special Districts Division at (951) 657-3280 to schedule the delivery of all required turn-over submittal items including as-built storm drain plans in electronic PDF format, one large format photo-copy of as-built plans, storm drain video report in electronic format, and hardcopy of video report with industry standard notations and still photos made during video runs (i.e. facilities sizes, off-sets or damage, facility type, dirt and debris, etc.). The flood control facilities shall be turned over in a condition acceptable to the City, and the developer shall make all necessary repairs and perform initial maintenance to the satisfaction of the City.

9. **(A.) Reserved.**
   (B.) Reserved.

10. **Prior to Certificate of Occupancy (Industrial/Commercial).** The issuance of occupancy certificate(s) is ***stringent*** upon meeting the Conditions of Approval set forth by Public Works. The following should be understood by Developer:
   a. Issuance of Temporary Certificate of Occupancy
      i. Upon no Public Works corrections at completion of Condition 4: Landscape Inspection #3, and
      ii. Completion of Conditions 1 through 3 and 6 through 8.
   b. Issuance of Final Certificate of Occupancy
      i. Upon confirmation by Public Works that all conditions set forth in this document have been completed to satisfaction.

STK ARCHITECTURE, INC.
42095 ZEVO DR., TEMECULA, CALIFORNIA 92590-3780
Phone: 951.296.9110 Fax: 951.296.6079 Email: stk@stkinc.com

CONSULTANT:

REVIEWED FOR CODE COMPLIANCE

THESE PLANS AND DOCUMENTS HAVE BEEN REVIEWED AND FOUND TO BE IN COMPLIANCE WITH THE APPLICABLE CODE REQUIREMENTS OF THE JURISDICTION. ISSUANCE OF A PERMIT IS RECOMMENDED, SUBJECT TO APPROVAL BY OTHER DEPARTMENTS AND ANY NOTED CONDITIONS. THE STAMPING OF THESE PLANS SHALL NOT BE HELD TO PERMIT OR BE AN APPROVAL OF ANY VIOLATION OF APPLICABLE CODES AND STANDARDS, NOR RELIEVE THE OWNER, DESIGN PROFESSIONAL OF RECORD, OR CONTRACTOR OF COMPLIANCE WITH THE APPLICABLE CODES AND STANDARDS. PLAN REVIEW OF DOCUMENTS DOES NOT AUTHORIZE CONSTRUCTION TO PROCEED IN VIOLATION OF ANY FEDERAL, STATE, OR LOCAL REGULATION.

BUILDING BUREAU SOLUTIONS, INC.
REVIEWED BY: STEVE KIM, PE, CASp

THIS SET OF THE PLANS AND SPECIFICATIONS MUST BE KEPT ON THE JOB SITE AT ALL TIMES AND IT IS UNLAWFUL TO MAKE ANY CHANGES OR ALTERATIONS WITHOUT PERMISSION FROM THE CITY. OCCUPANCY OF STRUCTURE(S) IS NOT PERMITTED UNTIL FINAL APPROVAL IS GRANTED BY ALL APPLICABLE DEPARTMENTS.

BBS BUILDING BUREAU SOLUTIONS INC.

PROJECT ADMINISTERED BY:
CITY OF PERRIS

101 NORTH "D" STREET
PERRIS, CA 92570

PROJECT NAME:
FIRE STATION 105 AND ADMINISTRATION BUILDING

PROJECT CIP: F077

2495 MURRIETA ROAD
PERRIS, CA 92585

ISSUE INFORMATION:

DATE:	INFORMATION:
11-26-25	95% CD SUBMITTAL
02-05-26	1 1st PC RESPONSE
02-19-26	2 2nd PC RESPONSE

SHEET INFORMATION:
STK PROJECT NO.: 365-03-25
SCALE: AS NOTED
DATE: NOVEMBER 2025
PLOT DATE: –
DRAWN BY: JN

SEAL:
LICENSED ARCHITECT ANTONIO FINALDI No. C31476 REN. 07-31-27 STATE OF CALIFORNIA

SHEET TITLE:
CONDITIONS OF APPROVAL

SHEET NO.:
T1.5

04/14/2026 1:50PM J:\365-City of Perris\365-03-25 South Perris Fire Station\Architectural\0T1.5-T1.6 - COA.dwg

CITY OF PERRIS
DEVELOPMENT SERVICES DEPARTMENT
PLANNING DIVISION

RECOMMENDED CONDITIONS OF APPROVAL

Administrative Development Plan Review (ADPR) 26-00001 January 20, 2026

PROJECT: Administrative Development Plan Review (ADPR) 26-00001 – A proposal to construct a 10,920 sq. ft. Fire Station, 5,195 sq. ft. Administration Office Building, and two storage facilities totaling 1,000 sq. ft. located at 2496 Murrieta Road within the Public (P) Zone of the Green Valley Specific Plan (GVSP). Applicant: Dave Martinez, City of Perris.

- **GENERAL CONDITIONS:**

1. **Mitigation Monitoring Program.** The project shall at all times comply with the adopted Mitigation Monitoring and Reporting Program (MMRP) for the Green Valley Specific Plan Final EIR certified March 5, 1990, except as updated by the Project Addendum. The MMRP shall be implemented in accordance with the timeline, reporting and monitoring intervals listed.

2. **Administrative Development Plan Approval**. This approval shall be null and void unless substantial construction of the project or commencement of the land use contemplated by this approval has begun within three years of the approval date. The applicant may apply for a maximum of three one-year extensions. A written request for an extension shall be submitted to the Planning Division at least thirty (30) days prior to the expiration date.

3. **Indemnification.** The developer/applicant shall indemnify, protect, defend, and hold harmless the City and any agency or instrumentality thereof and/or any of its officers, employees, and agents from any and all claims, actions, or proceedings against the City or any agency or instrumentality thereof, or any of its officers, employees, and agents, to attack, set aside, void, annul, or seek monetary damages resulting from approval of the City, or any agency or instrumentality thereof, advisory agency, appeal board or legislative body including actions approved by the voters of the City concerning **ADPR26-00001.** The City shall promptly notify the applicant of any claim, action, or proceeding for which indemnification is sought and shall cooperate fully in defense of the action.

- **PLANNING DIVISION**

4. **Municipal Code and Specific Plan Compliance.** The project shall conform to the standards of the Commercial Zone of the *Green Valley Specific Plan* (GVSP) and Chapter 19 of the Perris Municipal Code.

5. **Conformance to Approved Plans.** Development of the project site, building elevations, and conceptual landscaping shall conform substantially to the plans approved by the Public Safety Committee.

6. **Advisory - Signs:** Signs shall be permitted in accordance with Chapter 19.75 Sign Regulations of the Zoning Code and Green Valley Specific Plan. Signs shall be subject to separate review and assessment. A separate application and fee will be required.

7. **State, County, and City Ordinances.** All tenants shall comply with all State, County, and City ordinances, including, but not limited to, an annual fire inspection and maintenance of a City business license.

8. **Temporary Uses.** Per Chapter 19.60 of the City of Perris Municipal Code, any outdoor use of the common space for special events that require temporary structures or tents shall be required to apply for a Temporary Activities and Use Permit as described in Section 19.60.060 of the City of Perris Municipal Code.

Prior to Grading Permit Issuance:

9. **Mitigation Measures.** All applicable mitigation measures shall be satisfied.

10. **Grading Plans**. Grading plans shall be submitted to the City Engineer for review and approval. Grading plans shall be consistent with approved development plans.

11. **Planning Clearance.** The applicant shall first obtain clearance from the Planning Division to verify that all pertinent conditions of approval have been met.

Prior to Building Permit Issuance:

12. **Mitigation Measures.** All applicable mitigation measures shall be satisfied.

13. **Construction Drawings.** All Planning, Public Works, and Engineering conditions of approval and mitigation measures shall be copied on the construction drawings. The Conditions shall be annotated for ease of reference (i.e. Sheet and detail numbers).

14. **Construction Practices.** To reduce potential noise and air quality nuisances, the following items shall be listed as "General Notes" on the construction drawings:

    a. Construction activity and equipment maintenance are limited to weekday hours between 7:00 a.m. and 7:00 p.m. Construction may not occur on weekends or State holidays without the prior consent of the Building Official. Non-noise-generating activities (e.g., interior painting) are not subject to these restrictions.

    b. Construction routes are limited to City of Perris designated truck routes.

    c. Water trucks or sprinkler systems shall be used during clearing, grading, earth moving, excavation, transportation of cut or fill materials, and construction phases to prevent dust from leaving the site and to create a crust after each day's activities cease. At a minimum, this would include wetting down such areas in the late morning and after work is completed for the day and whenever wind exceeds 15 miles per hour.

    d. A person or persons shall be designated to monitor the dust control program and to order increased watering as necessary to prevent the transport of dust off-site. The name and telephone number of such people shall be provided to the City. Also, a board shall be placed at the subject site to include a person and phone number for the public to call in case of dirt and dust issues.

    e. Project applicants shall provide construction site electrical hook-ups for electric hand tools, such as saws, drills, and compressors, to eliminate the need for diesel-powered electric generators or provide evidence that electrical hook-ups at construction sites are not practical or prohibitively expensive.

15. **ADA Compliance.** The project shall conform to all disabled access requirements in accordance with the State of California, Title 24, and the Federal Americans with Disabilities Act (ADA).

16. **Mechanical Equipment.** All mechanical equipment, including air conditioning units, other outdoor equipment, etc., shall be screened from the public right-of-way by a view obscuring fence, wall, or landscaping to the satisfaction of the Planning Division.

17. **Trash Enclosures.** A covered trash enclosure constructed to City standards is required. The trash enclosure shall be easily accessible to the tenant and be screened by landscaping from public view. The split-face blocked wall trash enclosure shall have an overhead solid trellis cover.

During Construction:

18. **Mitigation Measures.** All applicable mitigation measures shall be satisfied.

19. **Waste Hauling and Disposal.** The project shall use only the City-approved waste hauler for all construction and other waste disposal.

20. Temporary Construction Fencing. A six-foot high temporary chain link fence (with view obscuring mesh) is required along the perimeter of each phase during construction. The fence shall limit public access to each construction site.

Prior To Issuance of Occupancy Permits:

21. **Final Inspection.** The applicant shall obtain occupancy clearance from the Planning Division by scheduling a final Planning inspection after final sign-offs from the Building Division and Engineering Department. Planning Staff shall verify that all pertinent conditions of approval have been met. The applicant shall have all the required paving, parking, walls, site lighting, landscaping, and automatic irrigation installed and in good condition.

22. **Occupancy Clearance.** The applicant shall have all required paving, parking, screen walls, colors, and materials (per approved elevation plans), site lighting, landscaping, and automatic

irrigation installed and in good condition prior to Planning sign-off.

Operational Conditions:

23. **Property Maintenance.** The project shall comply with the provisions of Perris Municipal Code 7.06 regarding Landscape Maintenance and Chapter 7.42 regarding Property Maintenance in perpetuity for the life of the development. In addition, the project shall comply with the one-year landscape maintenance schedule identified in the Public Works Department Conditions of Approval No. 4 dated January 15, 2025.

24. **Graffiti and Property Maintenance.** The project shall comply with the Perris Municipal Code Chapter 7.42 regarding Property Maintenance. The site shall be maintained graffiti-free state at all times. Graffiti located on site shall be removed within 48 hours. Graffiti shall be painted over in panels and not patches. In addition, it will match the color of the wall or material surface. Furthermore, the applicant shall apply an anti-graffiti coating on the walls.

25. **Future Obligation of Buyers and Lessees.** If applicable, all future buyers and lessees shall be informed of their obligation to comply with these Conditions of Approval. The applicant shall provide a copy of these conditions and inform the buyer or lessee of their obligation to maintain compliance with all local and City ordinances, including but not limited to an annual fire inspection and maintenance of a City business license.

- **ENGINEERING DEPARTMENT**

26. The project shall adhere to the requirements of the City Engineer as indicated in the attached Engineering Conditions of Approval dated **January 21, 2025.** On and off-site improvement plans shall be submitted for review and approval by the City Engineer.

- **PUBLIC WORKS DEPARTMENT**

27. The project shall adhere to the requirements of the Public Works Administration Department as indicated in the attached Conditions of Approval dated **January 15, 2026.**

- **BUILDING & SAFETY DIVISION**

28. The project shall adhere to the requirements of the Building & Safety Division as indicated in the attached Conditions of Approval.

- **BUILDING OFFICIAL/FIRE MARSHAL**

29. The proposed project shall adhere to all requirements of the Building Official/Fire Marshal. Fire hydrants shall be located on the project site pursuant to the Building Official and the approved Fire Access Plan. Water, gas, sewer, electrical transformers, power vaults and separate fire/water supply lines (if applicable) must be shown on the final set of construction plans pursuant to the requirements of the Building Official. All Conditions

of Approval shall be included in the building plans. See City of Perris website, Office of the Fire Marshal, for examples and relevant information for access and underground plan available at: http://www.cityofperris.org.

END OF CONDITIONS

CITY OF PERRIS
ENGINEERING DEPARTMENT

CONDITIONS OF APPROVAL

January 21, 2026

PLN25-00001 (ADPR)
South Perris Fire Station and Administration Building 111 – CIP F077
Portion of Lot 34 - TM 24648 (MB 226/88-100)
2495 Murrieta Road
APN: 327-210-016

With respect to the Conditions of Approval for the above referenced project, the City of Perris requires that the developer/property owner provides the following street improvements and/or road dedications in accordance with the City of Perris Municipal Code Title 18. It is understood that the site plan correctly shows all existing and proposed elements, traveled ways, right-of-way, and drainage courses with appropriate Q's and their omission may require the site plan to be resubmitted for further consideration. These ordinances and the following conditions are essential parts and requirements occurring in ONE is as binding as though occurring in all. They are intended to be complimentary and to describe the conditions for a complete design of the improvements. Unless otherwise noted, all offsite improvements as conditioned shall be installed prior to issuance of any occupancy permits. All questions regarding the true meaning of the conditions shall be referred to the City Engineer's office.

In the event of a conflict between any conditions stated below, those imposed by the Planning Department and others, and requirements identified in the approved Traffic Impact Analysis, the most stringent in the City's opinion shall prevail.

General Conditions:

1. Provide a copy of the recorded Record of Survey for the Engineering Department.

2. The project shall accept the offsite runoff and convey to acceptable outlet.

3. Prior to commencement of any construction or installation of fencing in public right-of-way, an encroachment permit shall be obtained from the City Engineer's office.

4. All trenches shall be securely covered with steel plates until permanent backfill and street repairs have been completed per City of Perris Standards; temporary backfill of trenches is not acceptable.

5. The driveways shall be per County of Riverside Standard No. 207A and shall include wet set concrete truncated domes in compliance with ADA standards and requirements. The driveways curb returns shall be within the property limits and shall not infringe on adjacent properties.

6. Access to the construction staging area shall be clearly posted and delineated and shall remain separate from public access.

7. The storage of soils, hazardous or deleterious materials, and heavy construction equipment within the staging area is prohibited.

8. All entrance gates shall remain open only when necessary and shall otherwise be firmly secured in place.

9. Any tracking to and from the project site within public rights-of-way, shall be prevented. The contractor shall ensure the site is cleared of any tracking or loose material at the end of each working day to the satisfaction of the City Engineer.

Prior to issuance of Grading Permit:

10. The project site is within the limits of the FEMA 100-year floodway; a LOMR shall be obtained from FEMA to amend the limits of the floodway.

11. The onsite sewer shall be designed to accommodate both existing and proposed conditions. The plans shall show the sewer connection tied to a septic tank located at the rear (east) of the site. The plans shall also account for sewer connection to the future sewer main in Murrieta Road once constructed. Any additional facilities shall be constructed with appropriate stub-outs to support this future connection.

12. Water improvement plans shall be submitted to the City of Perris and EMWD for review and approval.

13. An approved WQMP shall be provided and the WDID shall be listed on the plans.

Prior to issuance of Building Permit:

14. A compaction certificate from the Soils Engineer in compliance with the approved geotechnical/soils report and an elevation certification from the Engineer of Record in compliance with the approved plans.

15. Paved access shall be provided to the proposed buildings per the Precise Grading Plans.

Prior to issuance of Certificate of Occupancy:

16. Associated existing signing and striping shall be refreshed and any appurtenances damaged or broken during the development of this project shall be repaired or removed and replaced to the satisfaction of the City Engineer. Any survey monuments damaged or destroyed shall be reset by qualified professional pursuant to the California Business and Professional Code 8771.

STK ARCHITECTURE, INC.
42095 ZEVO DR., TEMECULA, CALIFORNIA 92590-3780
Phone: 951.296.9110 Fax: 951.296.6079 Email: stk@stkinc.com

CONSULTANT:

REVIEWED FOR CODE COMPLIANCE
THESE PLANS AND DOCUMENTS HAVE BEEN REVIEWED AND FOUND TO BE IN COMPLIANCE WITH THE APPLICABLE CODE REQUIREMENTS OF THE JURISDICTION. ISSUANCE OF A PERMIT IS RECOMMENDED, SUBJECT TO APPROVAL BY OTHER DEPARTMENTS AND ANY NOTED CONDITIONS. THE STAMPING OF THESE PLANS SHALL NOT BE HELD TO PERMIT OR BE AN APPROVAL OF ANY VIOLATION OF APPLICABLE CODES AND STANDARDS, NOR RELIEVE THE OWNER, DESIGN PROFESSIONAL OF RECORD, OR CONTRACTOR OF COMPLIANCE WITH THE APPLICABLE CODES AND STANDARDS. PLAN REVIEW OF DOCUMENTS DOES NOT AUTHORIZE CONSTRUCTION TO PROCEED IN VIOLATION OF ANY FEDERAL, STATE, OR LOCAL REGULATION.
BUILDING BUREAU SOLUTIONS, INC.
REVIEWED BY: STEVE KIM, PE, CASp
THIS SET OF THE PLANS AND SPECIFICATIONS MUST BE KEPT ON THE JOB SITE AT ALL TIMES AND IT IS UNLAWFUL TO MAKE ANY CHANGES OR ALTERATIONS WITHOUT PERMISSION FROM THE CITY. OCCUPANCY OF STRUCTURE(S) IS NOT PERMITTED UNTIL FINAL APPROVAL IS GRANTED BY ALL APPLICABLE DEPARTMENTS.
BBS BUILDING BUREAU SOLUTIONS INC.

PROJECT ADMINISTERED BY:
CITY OF PERRIS

101 NORTH "D" STREET
PERRIS, CA 92570

PROJECT NAME:
FIRE STATION 105 AND ADMINISTRATION BUILDING

PROJECT CIP: F077

2495 MURRIETA ROAD
PERRIS, CA 92585

ISSUE INFORMATION:

DATE:	INFORMATION:
11-26-25	95% CD SUBMITTAL
02-05-26	1 1st PC RESPONSE
02-19-26	2 2nd PC RESPONSE

SHEET INFORMATION:
STK PROJECT NO.: 365-03-25
SCALE: AS NOTED
DATE: NOVEMBER 2025
PLOT DATE: –
DRAWN BY: JN

SEAL:
LICENSED ARCHITECT ANTONIO FINALDI No. C31476 REN. 07-31-27 STATE OF CALIFORNIA

SHEET TITLE:
CONDITIONS OF APPROVAL

SHEET NO.:
T1.6

04/14/2026 1:50PM J:\365-City of Perris\365-03-25 South Perris Fire Station\Architectural\0T1.5-T1.6 - COA.dwg

CITY OF PERRIS

SOUTH PERRIS FIRE STATION - CIP F077

GRADING GENERAL NOTES

1. ALL WORK SHALL CONFORM TO THE REQUIREMENTS OF THE CITY OF PERRIS STANDARD DETAILS AND SPECIFICATIONS, THE RIVERSIDE COUNTY STREET IMPROVEMENT STANDARDS AND SPECIFICATIONS AND STANDARD PLANS; COUNTY ORDINANCE NO. 461; CALTRANS STANDARD PLANS AND SPECIFICATIONS; CALIFORNIA MANUAL ON UNIFORM TRAFFIC CONTROL DEVICES (M.U.T.C.D); & EASTERN MUNICAPAL WATER DISTRICT (E.M.W.D) STANDARDS.
2. GRADING SHALL NOT START WITHOUT FIRST NOTFYING THE ENGINEERING INSPECTOR FORTY–EIGHT (48) HOURS IN ADVANCE AND HOLDING A PRE– CONSTRUCTION MEETING. AN ONSITE PRE–CONSTRUCTION MEETING IS REQUIRED BEFORE START OF GRADING WITH THE FOLLOWING PEOPLE PRESENT AS APPLICABLE: OWNER, GRADING CONTRACTOR, DESIGN CIVIL ENGINEER, GEOTECHNICAL ENGINEER, ENGINEERING INSPECTOR AND WHEN REQUIRED, THE ARCHAEOLOGIST AND PALEONTOLOGIST. CONTACT THE ENGINEERING DEPARTMENT AT (951) 956–2120 TO SCHEDULE THE PRE– CONSTRUCTION MEETING.
3. CONSTRUCTION ACTIVITIES ARE LIMITED TO WEEKDAYS FROM 8:00 A.M. TO 5:00 P.M. THE CONTRACTOR MUST SUBMIT A WORK REQUEST TO THE ENGINEERING INSPECTOR 48 HOURS IN ADVANCE FOR APPROVAL OF ANY WORK SCHEDULED ON WEEKENDS OR HOLIDAYS. OVERTIME INSPECTION COSTS WILL BE THE CONTRACTOR/PROPERTY OWNER/DEVELOPER'S RESPONSIBILITY.
4. A DETAILED SCHEDULE SHALL BE PROVIDED AT THE PRE–CONSTRUCITON MEETING.
5. AN APPROVED ORIGINAL WATER QUALITY MANAGEMENT PLAN (WQMP) BINDER SHALL BE ON–SITE AT ALL TIMES, IF APPLICABLE.
6. REACH OUT TO THE WQMP INSPECTOR AT THE BEGINNING OF GRADING ACTIVITY TO REVIEW REQUIREMENTS AND COORDINATE SCHEDULING.
7. CONSTRUCTION PROJECTS THAT DISTURB ONE ACRE OR MORE, OR ON SITES THAT ARE PART OF A LARGER COMMON PLAN OF DEVELOPMENT THAT DISTURB ONE ACRE OR MORE, SHALL OBTAIN A NATIONAL POLLUTANT DISCHARGE ELIMINATION SYSTEM (NPDES) PERMIT. DEVELOPERS/CONTRACTORS SHALL FILE A NOTICE OF INTENT (NOI) WITH THE STATE WATER RESOURCES CONTROL BOARD (SWRCB), PREPARE A STORM WATER POLLUTION PREVENTION PLAN (SWPPP) AND MONITORING PLAN FOR THE SITE. THE PROJECT SHALL COMPLY WITH THE LATEST REGULATIONS SPECIFIC TO THE NPDES AT THE TIME OF PERMIT ISSUANCE. PRIOR TO CONSTRUCTION, THE PROPERTY OWNER/DEVELOPER SHALL PROVIDE TO THE CITY OF PERRIS A COPY OF THE NOI WITH A VALID WASTE DISCHARGE IDENTIFICATION (WDID) NUMBER.
8. A HAUL ROUTE PERMIT SHALL BE OBTAINED FROM THE ENGINEERING DEPARTMENT. THE PERMIT SHALL BE OBTAINED PRIOR TO THE COMMENCEMENT OF EXPORT OR IMPORT OF MATERIALS.
9. MAXIMUM CUT AND FILL SLOPE = 2:1.
10. ALL GRADING SHALL BE DONE IN CONFORMANCE WITH THE RECOMMENDATIONS OF THE PRELIMINARY SOILS INVESTIGATION BY INLAND FOUNDATION ENGINEERING, INC. DATED 09/23/25. TWO SETS OF FINAL COMPACTION REPORT SHALL BE SUBMITTED TO THE ENGINERRING DEPARTMENT, WHICH SHALL INCLUDE FOUNDATION DESIGN RECOMMENDATIONS AND CERTIFICATION THAT GRADING HAS BEEN DONE IN CONFORMANCE WITH THE RECOMMENDATIONS OF THE SITE INVESTIGATION REPORT.
11. ANY STORM DRAIN MANHOLE SHALL HAVE THE CITY OF PERRIS MANHOLE COVER.
12. ALL TRENCHES SHALL BE SECURELY COVERED WITH STEEL PLATES UNTIL PERMANENT BACKFILL AND STREET REPAIRS HAVE BEEN COMPLETED PER CITY OF PERRIS STANDARDS; TEMPORARY BACKFILL OF TRENCHES WILL NOT BE ACCEPTED.
13. PRIOR TO START OF THE GRADING ACTIVITY, LOCATION FOR STOCKPILING OF EXCESS OR OVEREXCAVATION OF MATERIAL SHALL BE APPROVED BY THE ENGINEERING INSPECTOR.
14. SANITARY FACILITIES SHALL BE PROVIDED AND MAINTAINED ON THE SITE AT ALL TIMES.
15. THE PROTECTION OF ALL UTILITIES IS THE RESPONSIBILITY OF THE PERMITTEE.
16. ALL EXISITING DRAINAGE COURSES ON THE PROJECT SITE SHALL CONTINUE TO FUNCTION UNTIL THE FACILITIES TO HANDLE STORM WATER ARE INSTALLED AND FUNCTIONAL. APPROVED PROTECTIVE MEASURES AND TEMPORARY DRAINAGE PROVISIONS SHALL BE USED TO PROTECT ADJACENT PROPERTIES DURING ALL CONSTRUCTION PHASES. IN ALL CASES, THE PERMITEE SHALL BE HELD LIABLE FOR ANY DAMAGE DUE TO THE OBSTRUCTION OF NATURAL DRAINAGE PATTERNS.
17. ANY EXISTING SEWER, CESSPOOL AND SEPTIC TANK SYSTEMS SHALL BE REMOVED AND/OR ABANDONED IN COMPLIANCE WITH THE APPLICABLE CODES AS APPROVED BY THE BUILDING OFFICIAL.
18. BEFORE THE BUILDING PERMIT IS ISSUED, A LICENSED SURVEYOR MUST SUBMIT PAD CERTIFICATION(S) TO THE ENGINEERING INSPECTOR. ADDITIONALLY, THE CIVIL ENGINEER OF RECORD SHALL PROVIDE A FINAL CERTIFICATION OF COMPLETION PER THE APPROVED GRADING PLAN BEFORE THE CERTIFICATE OF OCCUPANCY IS GRANTED.
19. WRITTEN PERMISSION AND/OR EASEMENTS IS REQUIRED FROM ANY ADJACENT PROPERTY OWNERS WHENEVER WORK ENCROACHES ONTO ADJACENT PROPERTIES INCLUDING THE ALTERATION OF WATER COURSES.
20. THE PROPERTY OWNER/CONTRACTOR SHALL CLEAN AND/OR REMOVE TRACKING OF MATERIAL DAILY WITHIN PUBLIC RIGHTS–OF–WAY TO THE SATISFACTION OF THE ENGINEERING INSPECTOR.
21. PROPOSED REVISIONS TO THE GRADING PLAN SHALL BE SUBMITTED AS A DELTA REVISION PLAN SET AND PROVIDED TO THE ENGINEERING DEPARTMENT FOR REVIEW AND APPROVAL. THE ORIGINAL APPROVED PLANS SHALL NOT BE CHANGED UNTIL THE REVISION HAS BEEN APPROVED BY THE CITY ENGINEER.
22. DEWATERING OF CONTAMINATED GROUNDWATER OR DISCHARGING CONTAMINATED SOILS VIA SURFACE EROSION IS PROHIBITED. DEWATERING OF NON–CONTAMINATED GROUNDWATER REQUIRES A NATIONAL POLLUTANT DISCHARGE ELIMINATION SYSTEM PERMIT FROM THE STATE REGIONAL WATER QUALITY CONTROL BOARD.
23. PAVEMENT SECTIONS MUST BE APPROVED BY THE CITY'S ENGINEERING DEPARTMENT. THE SOILS ENGINEER SHALL SUBMIT PAVEMENT STRUCTURAL SECTION RECCOMENDATIONS BASED ON "R" VALUE ANALYSIS OF THE SUBGRADE SOILS, AND CITY APPROVED TRAFFIC INDICES. "R" VALUE TESTS SHALL BE IN ACCORDANCE WITH STATE OF CALIFORNIA TESTING METHOD 301 OR ASTM D2844 OF THE SUBGRADE SOILS.

ESTIMATE OF EARTHWORK QUANTITIES

RAW CUT	60	C.Y.
RAW FILL	14,730	C.Y.
TOTAL (NET FILL)	14,670	C.Y.

NOTE: THESE QUANTITIES ARE THE ENGINEERS VOLUME CALCULATIONS AND DO NOT REFLECT ANY LOSSES. REFER TO THE SOILS ENGINEER'S REPORT FOR LOSSES DUE TO SHRINKAGE, SUBSIDENCE OR ANY OTHER FACTORS CALLED OUT BY THE SOILS ENGINEER. ANY EXCESS DIRT CREATED FROM THIS PROJECT SHALL BE SPREAD OVER THE SITE PER THE SOILS ENGINEERS RECOMMENDATIONS.

NOTIFICATIONS

NOTE: THE CONTRACTOR SHALL NOTIFY THE FOLLOWING UTILITIES OR AGENCIES FORTY–EIGHT (48) HOURS PRIOR TO STARTING CONSTRUCTION OR EXCAVATION.

CITY OF PERRIS	1–951–943–6100
EASTERN MUNICIPAL WATER DISTRICT (E.M.W.D)	1–951–928–3777
FRONTIER TELEPHONE	1–855–679–3074
SOUTHERN CALIFORNIA GAS COMPANY	1–877–238–0092
SOUTHERN CALIFORNIA EDISON COMPANY	1–800–684–8123
AT&T	1–800–310–2355
LEVEL 3 COMMUNICATIONS/LUMEN	1–909–473–1569
UNDERGROUND SERVICE ALERT (U.S.A.)	1–800–422–4133

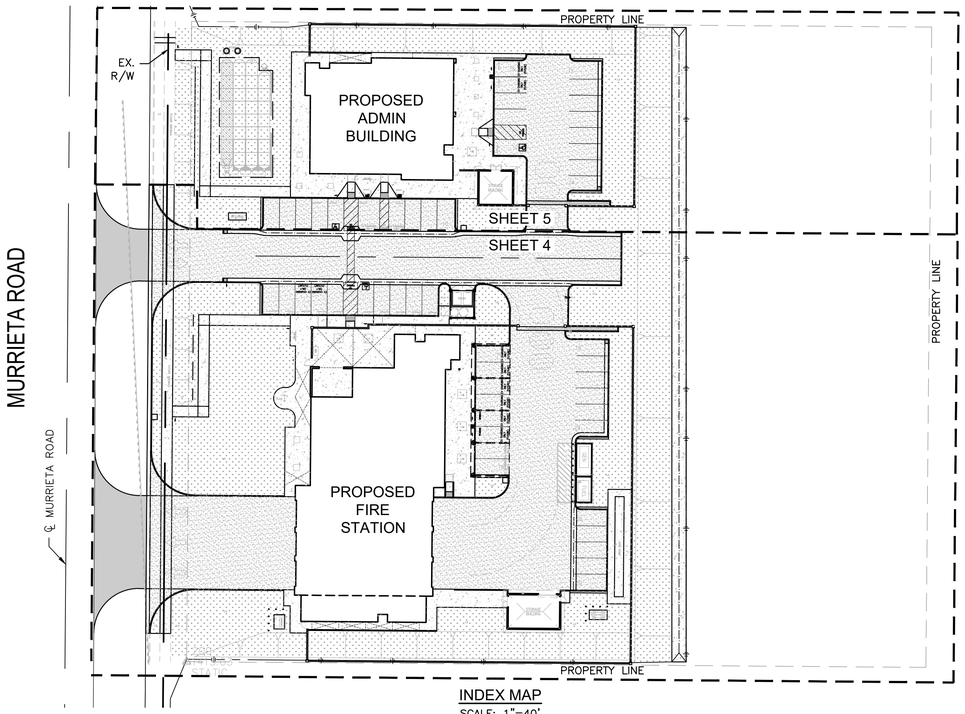

INDEX MAP

SCALE: 1"=40'

0 20 40 80

FEET

SITE ADDRESS

2495 MURRIETA RD
PERRIS, CA 92585

TOTAL DISTURBED AREA

2.3 ACRES

ASSESSORS PARCEL NUMBER

327–210–016

SHEET INDEX

DESCRIPTION	SHT NO.
TITLE SHEET	C–1
DETAILS	C–2
SECTIONS AND DETAILS	C–3
PRECISE GRADING PLAN	C–4
PRECISE GRADING PLAN	C–5
UTILITY PLAN	C–6
UTILITY PLAN	C–7
EROSION CONTROL PLAN	C–8
EROSION CONTROL PLAN	C–9

BENCHMARK

2 MILES NORTH ON MURRIETA ROAD FROM CATHOLIC CHURCH IN SUN CITY, 700' NORTH OF INTERSECTION OF MURRIETA ROAD AND ETHANAC ROAD, 40' WEST OF MURRIETA ROAD & LEVEL WITH THE ROAD, 3' NORTHEAST OF THE SOUTH EAST CORNER OF 8' CHAIN LINK FENCE OF E.M.W.D MURRIETA PUMPING STATION, 2' NORTH OF MARKER POST, SET BRASS DISK IN THE TOP OF CONCRETE POST STAMPED "600–31–68"

ELEVATION = 1416.80 NAV88 (VERTCON3)

BASIS OF BEARING

THE BEARINGS SHOWN HEREON ARE BASED UPON THE CALIFORNIA COORDINATE SYSTEM OF 1983, CCS83, ZONE 6, (2017.50) IN ACCORDANCE WITH THE CALIFORNIA PUBLIC RESOURCES CODE SECTIONS 8801–8819; SAID BEARINGS ARE BASED LOCALLY UPON FIELD–OBSERVED TIES TO THE FOLLOWING CALIFORNIA SPATIAL REFERENCE NETWORK, OR EQUIVALENT STATION:

STATION	LATITUDE	LONGITUDE	ELLIPSOID HEIGHT
MLFP	33° 55' 6.24658"	117° 19' 4.60799"	473.685(M)
BILL	33° 34' 41.66956"	117° 03' 52.52037"	470.770(M)
P584	33° 53' 33.36190"	116° 57' 5.86395"	739.474(M)

NOTE TO CONTRACTOR

THE CONTRACTOR SHALL OBTAIN APPROVAL FROM THE GEOTECHNICAL ENGINEER FOR ALL IMPORTED SOILS PRIOR TO DELIVERY TO THE SITE. ALL IMPORT MATERIAL SHALL BE TESTED, VERIFIED, AND APPROVED BY THE GEOTECHNICAL ENGINEER FOR SUITABILITY AND COMPLIANCE WITH THE PROJECT GEOTECHNICAL RECOMMENDATIONS BEFORE PLACEMENT AND COMPACTION.

LEGEND

CENTER LINE
RIGHT OF WAY
PROPERTY LINE
FLOWLINE
EXISTING EDGE OF PAVEMENT
EXISTING TELECOMMUNICATIONS
EXISTING ELECTRIC
EXISTING WATER LINE
EXISTING IMPROVEMENTS
EXISTING ELEVATION CONTOURS 1420
PROPOSED ELEVATION CONTOURS (1420)
PROPOSED IMPROVEMENTS
PROPOSED RETAINING WALL
SIDE SLOPE

TOPOGRAPHY SOURCE

ENGINEERING RESOURCES OF SOUTHERN CALIFORNIA, INC.

DATE: 08/06/2025

1861 W REDLANDS BLVD
REDLANDS, CA 92373

PH: (909) 890–1255

HATCH LEGEND

CONSTRUCT PCC SIDEWALK
CONSTRUCT PCC IMPROVEMENTS
LANDSCAPE AREA

ABBREVIATIONS

AC	ASPHALT CONCRETE
℄	CENTER LINE
C&G	CURB AND GUTTER
FF	FINISHED FLOOR
FL	FLOW LINE
FS	FINISHED SURFACE
GB	GRADE BREAK
NTS	NOT TO SCALE
PL	PROPERTY LINE
RL	RIDGE LINE
R/W	RIGHT OF WAY
SWR	SEWER
TC	TOP OF CURB
TD	TOP OF DITCH
TF	TOP OF FOOTING
TG	TOP OF GRATE
TW	TOP OF WALL
TYP.	TYPICAL

SOIL ENGINEER

INLAND FOUNDATION ENGINEERING, INC.
1310 SOUTH SANTA FE AVE. PO BOX 937
SAN JACINTO, CA. 92581

PH: (951) 654–1555

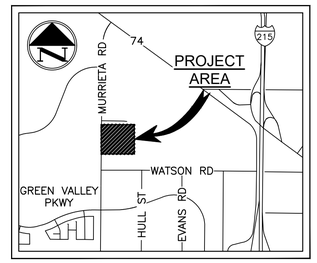

VICINITY MAP

N.T.S.

EROSION CONTROL GENERAL NOTES

1. IN CASE OF EMERGENCY CALL CITY OF PERRIS, ENGINEERING DEPARTMENT AT (951)956–2120. (RESPONSIBLE PERSON) (24 HR #)
2. TOTAL DISTURBED AREA 2.3 ACRES, WDID # ____, RISK LEVEL (1) 2, 3 (CIRCLE ONE AS DETERMINED BY STATE PERMIT FOR SITES GREATER THAN ONE ACRE.)
3. AS THE ENGINEER/QSD OF RECORD, I HAVE SELECTED APPROPRIATE BMPS TO EFFECTIVELY MINIMIZE THE NEGATIVE IMPACTS OF THIS PROJECT'S CONSTRUCTION ACTIVITIES ON STORMWATER QUALITY. THE PROJECT OWNER/DEVELOPER AND CONTRACTOR ARE AWARE THAT THE SELECTED BMPS MUST BE INSTALLED, MONITORED, AND MAINTAINED TO ENSURE THEIR EFFECTIVENESS. AS THE ENGINEER/QSD OF RECORD, I HAVE SELECTED APPROPRIATE BMPs TO EFFECTIVELY MINIMIZE THE NEGATIVE IMPACTS OF THIS PROJECT'S CONSTRUCTION ACTIVITIES ON STORM WATER QUALITY. THE PROJECT OWNER/DEVELOPER AND CONTRACTOR ARE AWARE THAT THE SELECTED BMPs MUST BE INSTALLED MONITORED AND MAINTAINED TO ENSURE THEIR EFFECTIVENESS.

(SIGNATURE) (DATE) (LECENSE #)

4. A STANDBY CREW FOR EMERGENCY WORK SHALL BE AVAILABLE AT ALL TIMES DURING THE RAINY SEASON. NECESSARY EROSION AND SEDIMENT CONTROL MATERIALS SHALL BE AVAILABLE ON SITE AND STOCKPILED AT CONVENIENT LOCATIONS TO FACILITATE RAPID IMPLEMENTATION OR CONSTRUCTION OF TEMPORARY DEVICES OR TO REPAIR ANY DAMAGED EROSION CONTROL MEASURES WHEN RAIN IS IMMINENT.
5. DEVICES SHALL NOT BE MOVED OR MODIFIED WITHOUT THE APPROVAL OF THE ENGINEERING INSPECTOR. ALL DAMAGED BMP'S SHALL BE IMMEDIATELY REMOVED AND REPLACED.
6. ALL REMOVABLE PROTECTIVE DEVICES SHOWN SHALL BE IN PLACE AT THE END OF EACH WORKING DAY WHEN THE FIVE–DAY RAIN PROBABILITY FORECAST EXCEEDS 40 PERCENT.
7. EROSION CONTROL SHALL BE IN PLACE IN THE FIELD DURING THE RAINY SEASON (OCTOBER 15 TO MAY 31) AND ANYTIME DURING THE YEAR WHEN THE FIVE–DAY RAIN PROBABILITY FORECAST EXCEEDS 40 PERCENT.
8. AFTER EACH RAINSTORM, THE PERFORMANCE OF THE EROSION CONTROL SYSTEM SHALL BE EVALUATED AND REVISED AND REPAIRED AS DIRECTED BY THE ENGINEERING INSPECTOR.
9. CUT AND FILL SLOPES EQUAL TO OR GREATER THAN 3' IN VERTICAL HEIGHT SHALL BE PLANTED WITH GRASS OR GROUND COVER TO PROTECT THE SLOPE FROM EROSION AND INSTBAILITY IN ACCORDANCE WITH ORDINANCE NO. 457 PRIOR TO FINAL GRADING INSPECTION.
10. A GUARD SHALL BE POSTED ON THE SITE WHENEVER THE DEPTH OF WATER IN ANY DEVICE EXCEEDS TWO FEET. THE DEVICE SHALL BE DRAINED OR PUMPED DRY WITHIN 24 HOURS AFTER EACH RAINSTORM. PUMPING AND DRAINING OF ALL BASINS AND DRAINAGE DEVICES MUST COMPLY WITH THE APPROPRIATE BMP FOR DEWATERING OPERATIONS.
11. ALL SLOPES TO BE PLANTED SHALL BE COVERED WITH DROUGHT TOLERANT PLANT (OR EQUIVALENT) GROUND COVER, SPACED 12" APART. SLOPES EXCEEDING 15' IN VERTICAL HEIGHT SHALL BE PLANTED WITH APPROVED TREE SPACING NO MORE THAN 20' APART, SHRUBS NO MORE THAN 10' APART, OR A COMBINATION OF BOTH, WITH A MAXIMUM SPACING OF 15'. GRASS MIX OR GROUND COVER IS ALSO REQUIRED. SLOPES OVER 4' IN VERTICAL HEIGHT SHALL INCLUDE AN IN– GROUND IRRIGATION SYSTEM. SLOPES 4' OR LESS MAY BE IRRIGATED WITH A HOSE BIB AT THE TOP OR BOTTOM, WITH A HOSE NO LONGER THAN 40' IN LENGTH. THE IRRIGATION SYSTEM SHALL BE EQUIPPED WITH A PROPER BACKFLOW DEVICE AS PER U.P.C
12. EVERY EFFORT SHOULD BE MADE TO ELIMINATE THE DISHCHARGE OF NON– STORM WATER FROM THE PROJECT SITE AT ALL TIMES
13. DRAINAGE INLETS ADJACENT TO GRADING OPERATIONS SHALL HAVE SEDIMENT CONTROL DEVICES IN PLACE AT ALL TIMES (YEAR–ROUND) AS DIRECTED BY THE ENGINEERING INSPECTOR.
14. EXCESS OR WASTE CONCRETE MAY NOT BE WASHED INTO THE PUBLIC RIGHT OF WAY OR ANY OTHER DRAINAGE SYSTEM. PROVISIONS SHALL BE MADE TO RETAIN CONCRETE WASTES ON–SITE UNTIL THEY CAN BE DISPOSED OF AS SOLID WASTE.
15. TRASH AND CONSTRUCTION RELATED SOLID WASTES MUST BE DEPOSITED INTO A COVERED RECEPTACLE TO PREVENT CONTAIMINATION OF RAINWATER AND DISPERSAL BY WIND.

DECLARATION OF ENGINEER OF RECORD

I HEREBY DECLARE THAT IN MY PROFESSIONAL OPINION, THE DESIGN OF THE IMPROVEMENTS AS SHOWN ON THESE PLANS COMPLIES WITH THE CURRENT PROFESSIONAL ENGINEERING STANDARDS AND PRACTICES. AS THE ENGINEER IN RESPONSIBLE CHARGE OF THE DESIGN OF THESE IMPROVEMENTS, I ACCEPT FULL RESPONSIBILITY FOR SUCH DESIGN. I UNDERSTAND AND ACKNOWLEDGE THAT THE PLAN CHECK OF THESE PLANS BY THE CITY OF PERRIS IS A REVIEW FOR THE LIMITED PURPOSE OF ENSURING THAT THESE PLANS COMPLY WITH CITY PROCEDURES AND OTHER APPLICABLE CODES AND ORDINACES. THE PLAN REVIEW PROCESS IS NOT A DETERMINATION OF THE TECHNICAL ADEQUACY OF THE DESIGN OF THE IMPROVEMENTS. SUCH PLAN CHECK DOES NOT THEREFORE RELIEVE ME OF MY DESIGN RESPONSIBILITY.

AS THE ENGINEER OF RECORD, I AGREE TO DEFEND AND INDEMNIFY THE CITY OF PERRIS, ITS OFFICERS, ITS AGENTS, AND ITS EMPLOYEES FROM ANY AND ALL LIABILITY, CLAIMS, DAMAGES, OR INJURIES TO ANY PERSON OR PROPERTY ARISING FROM NEGLIGENT ACTS, ERRORS OR OMISSIONS OF THE ENGINEER OF RECORD, HIS EMPLOYEES, HIS AGENTS, OR HIS CONSULTANTS.

JOHN M. BRUDIN — 41836 — _____ — _____
SUPERVISING CIVIL ENGINEER — P.E. NUMBER — SIGNATURE — DATE

GEOTECHNICAL REVIEW

I HERBY CERTIFY THAT I HAVE REVIEWED THESE PRECISE GRADING PLANS AND FURTHER CERTIFY THAT THESE PLANS ARE BOTH IN CONFORMANCE WITH AND INCORPONETS THE RECOMMENDATION CONTAINED IN A REPORT PREPARED BY ME ENTITLED PROPOSED DEVELOPMENT, CITY OF PERRIS, RIVERSIDE COUNTY, CALIFORNIA, AND ALL ADDENDUMS THEREAFTER AND DATED _____.

ALLEN D. EVANS, P.E., G.E. — 2060 — _____ — _____
SUPERVISING CIVIL ENGINEER — G.E. NUMBER — SIGNATURE — DATE

DIG ALERT DIAL TOLL FREE 811 — AT LEAST TWO DAYS BEFORE YOU DIG — UNDERGROUND SERVICE ALERT OF SOUTHERN CALIFORNIA

DATE	BY	MARK	REVISIONS	APPR.	DATE

ENGINEER — CITY
DESIGNED BY: — DRAWN BY: — CHECKED BY:

PREPARED BY:
ERSG INC.COM
Engineering Resources of Southern California
1861 West Redlands Blvd.
Redlands, CA 92373
P: 909.890.1255
JOHN M. BRUDIN — DATE

SEAL: REGISTERED PROFESSIONAL ENGINEER — JOHN M. BRUDIN — No. 41836 — CIVIL — STATE OF CALIFORNIA

APPROVED BY: — DATE: _____
CITY ENGINEER

CITY OF PERRIS ENGINEERING DEPARTMENT
24 S. D ST. SUITE 100
PERRIS CA 92570
951–956–2120

SCALE: AS SHOWN
DATE:
BENCHMARK: SEE ON SHEET 1

CITY OF PERRIS, CALIFORNIA
SOUTH PERRIS FIRE STATION
CIP F077
TITLE SHEET

FOR: CITY OF PERRIS — W.O.

SHEET NO. C-1 OF 9 SHEETS
FILE NO.

GRADING CONSTRUCTION NOTES

1. CONSTRUCT 9-INCH PCC PAVEMENT OVER 12-INCH OF CLASS 2 AGGREGATE BASE COMPACTED 95% RELATIVE COMPACTION.
2. CONSTRUCT 12-INCH PCC PAVEMENT OVER 12-INCH OF CLASS 2 AGGREGATE BASE COMPACTED 95% RELATIVE COMPACTION, SEE SHEET C-2.
3. CONSTRUCT 6" PCC CURB PER RIVERSIDE COUNTY STD 204.
4. CONSTRUCT 6" PCC CURB AND GUTTER PER RIVERSIDE COUNTY STD 200.
5. CONSTRUCT 4" THICK PCC SIDEWALK OVER COMPACTED SUBGRADE PER RIVERSIDE COUNTY STD 400.
6. CONSTRUCT COMMERCIAL DRIVEWAY APPROACH PER RIVERSIDE COUNTY STD 207A (MODIFIED PER PLANS).
7. CONSTRUCT 4" WHITE LINE THERMOPLASTIC PARKING STRIPING PER ARCHITECT SPECIFICATIONS.
8. CONSTRUCT ADA PARKING STALL PER DETAIL "A" ON SHEET C-2.
9. CONSTRUCT CONCRETE WHEEL STOP PER DETAIL "B" ON SHEET C-2.
10. CONSTRUCT 3-FOOT CROSS GUTTER PER DETAIL "C" ON SHEET C-2.
11. INSTALL YELLOW DETECTABLE WARNING MAT PER DETAIL "D" ON SHEET C-2.
12. INSTALL PSI PACIFIC SOUTHWEST PUMP SYSTEM PER DETAIL ON SHEET C-3, OR APPROVED EQUAL.
13. CONSTRUCT CURB RAMP PER RIVERSIDE COUNTY STD 403, CASE C.
14. CONSTRUCT CURB RAMP PER RIVERSIDE COUNTY STD 403, CASE A.
15. CONSTRUCT CMU WALL PER ARCHITECTURAL PLAN, SEE DETAIL 1 ON SHEET A1.5.
16. CONSTRUCT 0.30' THICK AC OVER 6" OF CLASS 2 AGGREGATE BASE MATERIAL.
17. CONSTRUCT ABOVE GROUND FUEL TANK, GENERATOR, CONCRETE CONTAINMENT POND, SHADE CANOPY, AND PIPE BOLLARDS PER ARCHITECTURAL PLAN, SEE DETAIL 12 ON SHEET A1.2.
18. CONSTRUCT TRASH ENCLOSURE PER ARCHITECTURAL PLAN, SEE DETAIL 2 ON SHEET A1.2.
19. CONSTRUCT CANOPY PER ARCHITECTURAL PLAN, SEE SHEET A1.6.
20. CONSTRUCT MOTORIZED GATE KEYPAD ON PEDESTAL AND PIPE BOLLARDS PER ARCHITECTURAL PLAN, SEE DETAIL 12 ON SHEET A1.3. FIRE DEPARTMENT KNOX KEY SWITCH REQUIRED AT KEYPAD PEDESTAL CONTROL BOX.
21. CONSTRUCT ORNAMENTAL MOTORIZED ROLLING GATE AND COMPONENTS PER ARCHITECTURAL PLAN, SEE DETAIL 5 ON SHEET A1.3.
22. INSTALL 4'X12' ES48E ECOSTREAM BIOFILTER SOLID LID MODULAR WETLANDS SYSTEM PER DETAIL ON SHEET C-2 AND WQMP REPORT, OR APPROVED EQUAL.
23. CONSTRUCT LPG TANK, CONCRETE PAD, AND PIPE BOLLARDS PER ARCHITECTURAL PLAN, SEE DETAIL 5 ON SHEET A1.1.
24. CONSTRUCT 5-INCH PCC PAVEMENT OVER 6-INCH OF CLASS 2 AGGREGATE BASE COMPACTED 95% RELATIVE COMPACTION.
25. CONSTRUCT CURB RAMP PER RIVERSIDE COUNTY STD 403, CASE D, MODIFIED PER PLANS.
26. CONSTRUCT UNDER SIDEWALK DRAIN PER RIVERSIDE COUNTY STD 309. W=3'.
27. CONSTRUCT SHOTCRETE V-DITCH W=8' PER DETAIL "E" ON SHEET C-2.
28. INSTALL ADS MC-3500 STORMTECH CHAMBER PER PLANS AND SEPARATE ADS CHAMBERS DESIGN DOCUMENTS PER DETAIL ON SHEET C-3 AND WQMP REPORT, OR APPROVED EQUAL.

STROM DRAIN NOTES

- (A) INSTALL 24"X24" JENSEN PRECAST DROP INLET BASIN MODEL 2424 WITH GRATE, OR APPROVED EQUAL.
- (B) INSTALL 6" ROUND GRATE COVER PER DETAIL "G" ON SHEET C-2.
- (C) INSTALL 4" HDPE PIPE OR APPROVED EQUAL.
- (D) INSTALL 6" HDPE PIPE OR APPROVED EQUAL.
- (E) INSTALL 9" HDPE PIPE OR APPROVED EQUAL.
- (F) INSTALL 12" HDPE PIPE OR APPROVED EQUAL.
- (G) INSTALL 18" HDPE PIPE OR APPROVED EQUAL.
- (H) 6" CLEAN OUT.
- (J) 9X12 HDPE INCREASER.
- (K) 12X18 HDPE INCREASER.
- (L) 12X12X12 HDPE TEE.
- (M) 12X12X12X12 HDPE CROSS.

EROSION CONTROL NOTES

1. STABILIZED CONSTRUCTION ENTRANCE (TC-1)
2. SILT FENCE (SE-1)
3. FIBER ROLLS (SE-5)
4. GRAVEL BAG BERM (SE-6)
5. STREET SWEEPING AND VACUUMING (SE-7)
6. STORM DRAIN INLET PROTECTION (SE-10)
7. MATERIAL DELIVERY AND STORAGE (WM-1)
8. STOCKPILE MANAGEMENT (WM-3)
9. SPILL PREVENTION AND CONTROL (WM-4)
10. SOLID WASTE MANAGEMENT (WM-5)
11. CONCRETE WASTE MANAGEMENT (WM-8)
12. VEHICLE AND EQUIPMENT FUELING (NS-9)
13. VEHICLE AND EQUIPMENT MAINTENANCE (NS-10)

UTILITY PLAN NOTES

WATER CONSTRUCTION NOTES:

1. INSTALL 2-INCH WATER SERVICE CONNECTION AND METER PER EMWD STD DWG B-344A.
2. INSTALL 1-INCH WATER IRRIGATION SERVICE CONNECTION AND METER PER EMWD STD DWG B-590A.
3. INSTALL 2-INCH REDUCED PRESSURE BACKFLOW PREVENTER PER EMWD STD DWG B-597A.
4. INSTALL 1-INCH REDUCED PRESSURE BACKFLOW PREVENTER PER EMWD STD DWG B-597A.
5. INSTALL 2-INCH 45° ELBOW.
6. INSTALL 2-INCH PVC, SCHEDULE 40 OR APPROVED EQUAL.
7. CONNECT MANIFOLD PER EMWD MANIFOLD STANDARD DETAIL ON SHEET C-2.

SEWER CONSTRUCTION NOTES:

1. INSTALL GREASE INTERCEPTOR PER SEPTIC SYSTEM PLAN, SEE SHEET D-1.
2. INSTALL 4-INCH SCHEDULE 40 PVC OR APPROVED EQUAL.
3. INSTALL 4-INCH SEWER CLEANOUT PER SEPTIC SYSTEM PLAN, SEE SHEET D-1.

FIRE PROTECTION CONSTRUCTION NOTES:

[1] INSTALL 10-INCH FIRE DOUBLE CHECK DETECTOR ASSEMBLY PER EMWD STD DWG B-657.

[2] INSTALL POST INDICATOR AND FIRE DEPARTMENT CONNECTION VALVE PER DETAIL "H" ON SHEET C-2.

[3] INSTALL 10-INCH PVC C900 OR APPROVED EQUAL.

[4] INSTALL 6-INCH PVC C900 OR APPROVED EQUAL.

[5] INSTALL 6-INCH DIA. FIRE HYDRANT PER EMWD STD DWG B-517.

[6] INSTALL 6-INCH 45° ELBOW.

[7] INSTALL 10-INCH 45° ELBOW.

[8] INSTALL 10X6-INCH TEE.

[9] INSTALL 10"X6" REDUCER.

[10] CONNECT FIRE LINE PER DETAIL "J" ON SHEET C-6 AND C-7.

[11] CONSTRUCT 3'X3 CONCRETE PAD PER EMWD STD DWG B-517.

[12] INSTALL 10-INCH 90° ELBOW.

[13] INSTALL 6-INCH 90° ELBOW.

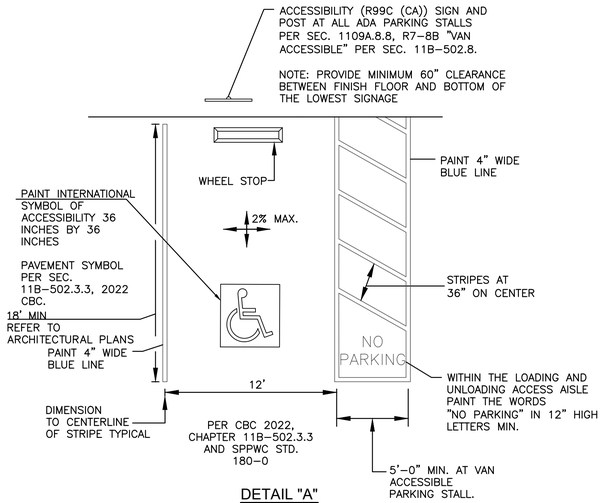

DETAIL "A"
ADA PARKING STALL
N.T.S.

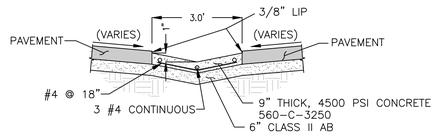

DETAIL "C"
4' CROSS GUTTER
N.T.S.

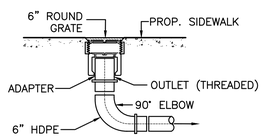

DETAIL "G"
6" DIA. DRAIN
N.T.S.

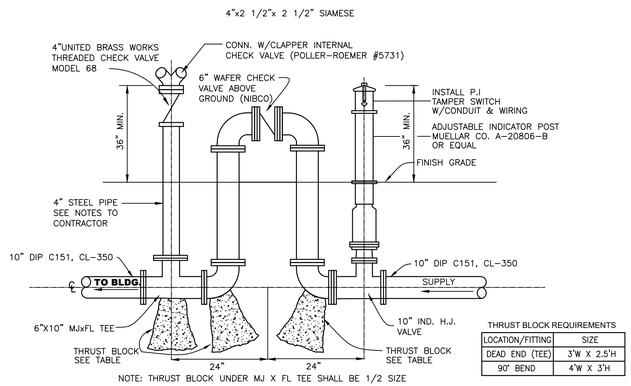

THRUST BLOCK REQUIREMENTS

LOCATION/FITTING	SIZE
DEAD END (TEE)	3'W X 2.5'H
90° BEND	4'W X 3'H

DETAIL "H" - POST INDICATOR FIRE DEPARTMENT CONNECTION
N.T.S.

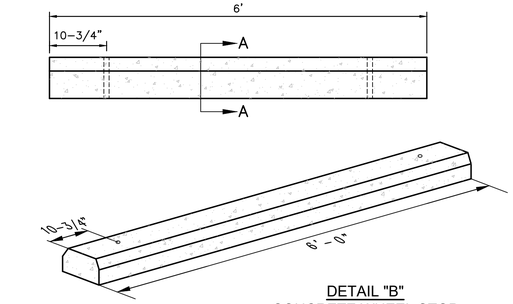

SECTION A-A
N.T.S.

DETAIL "B"
CONCRETE WHEEL STOP
N.T.S.

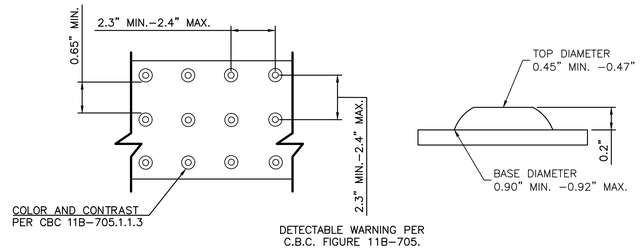

DETECTABLE WARNING PER C.B.C. FIGURE 11B-705.

DETAIL "D"
DETECTABLE WARNING MAT
N.T.S.

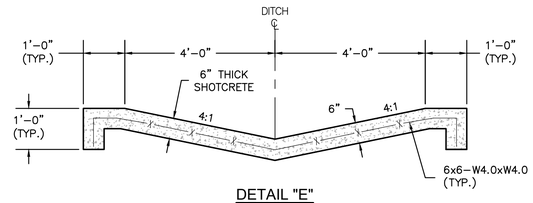

DETAIL "E"
SHOTCRETE V-DITCH
N.T.S.

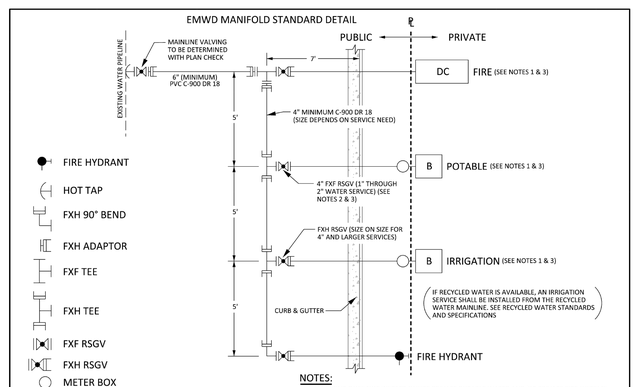

DIG ALERT
DIAL TOLL FREE 811
AT LEAST TWO DAYS BEFORE YOU DIG
UNDERGROUND SERVICE ALERT OF SOUTHERN CALIFORNIA

DATE	BY	MARK	REVISIONS	APPR.	DATE

ENGINEER
DESIGNED BY: DRAWN BY: CHECKED BY:

PREPARED BY:
ERSG INC.COM
Engineering Resources of Southern California
1861 West Redlands Blvd.
Redlands, CA 92373
P: 909.890.1255
JOHN M. BRUDIN DATE

SEAL
REGISTERED PROFESSIONAL ENGINEER JOHN M. BRUDIN No. 41836 CIVIL STATE OF CALIFORNIA

APPROVED BY: DATE:
CITY ENGINEER

CITY OF PERRIS ENGINEERING DEPARTMENT
24 S. D ST. SUITE 100
PERRIS CA 92570
951-956-2120

SCALE: AS SHOWN
DATE:
BENCHMARK: SEE ON SHEET 1

CITY OF PERRIS, CALIFORNIA
SOUTH PERRIS FIRE STATION
CIP F077
DETAILS
FOR: CITY OF PERRIS W.O.

SHEET NO. C-2 OF 9 SHEETS
FILE NO.

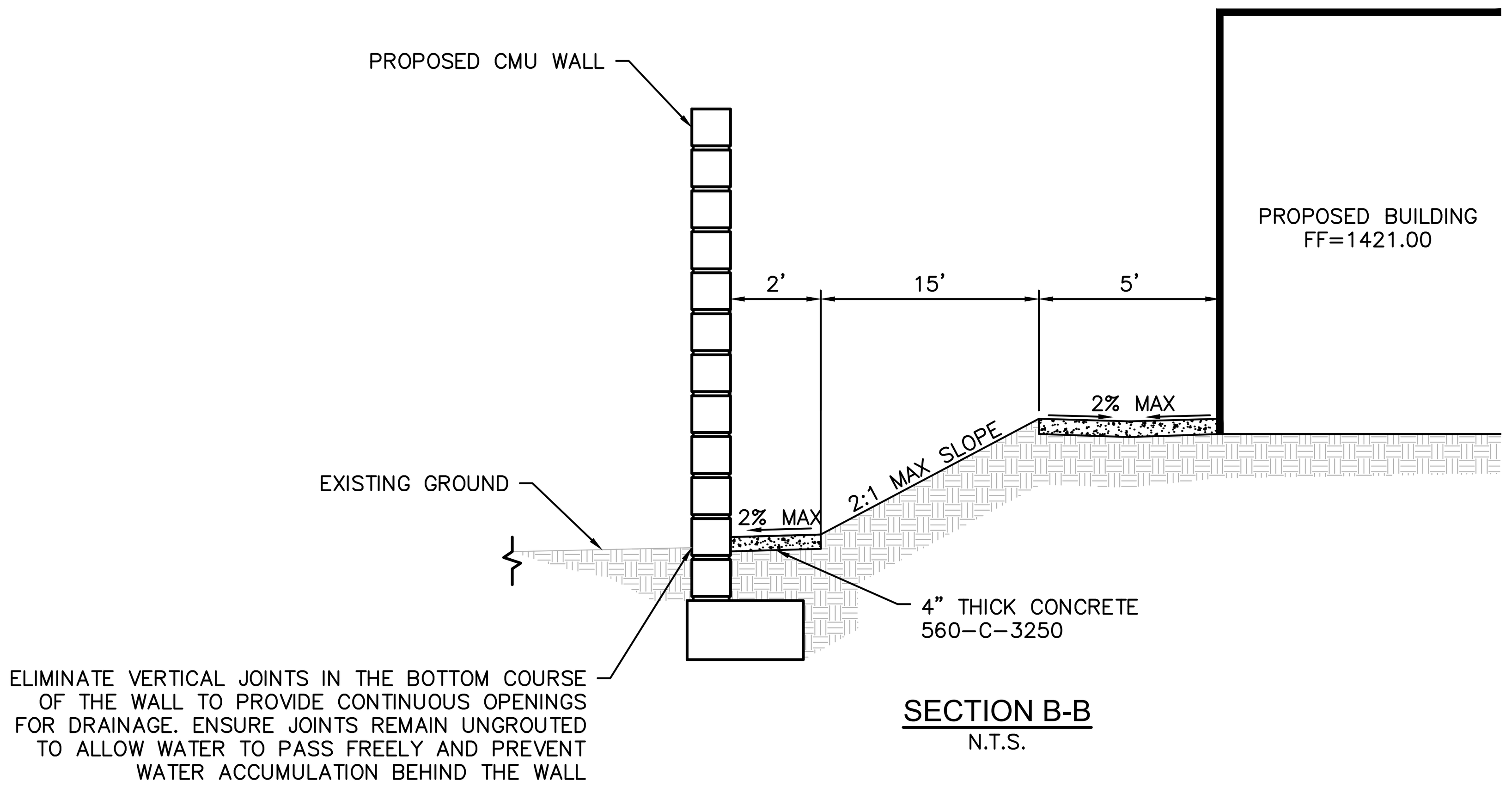

SECTION B-B
N.T.S.

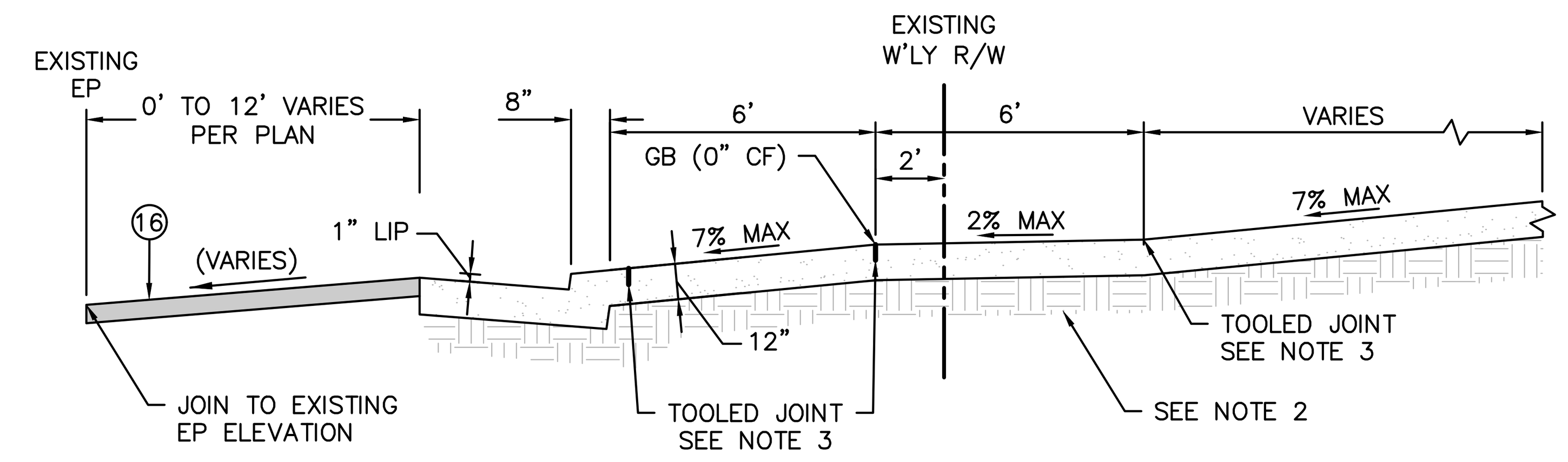

*CROSS SLOPE OF SIDEWALK SHALL BE 2.00% MAX PER PLANS.

SECTION E-E
N.T.S.

NOTES:
1. DRIVEWAY APPROACH SHALL BE 8" CONCRETE WITH MINIMUM CEMENTITIOUS MATERIAL CONTENT=590 LB/CU YD.
2. RELATIVE COMPACTION OF SUBGRADE UNDER DRIVEWAY APPROACH SHALL BE 95% MIN.
3. APPROACHES SHALL HAVE 1 ½" DEEP 3⁄16 " WIDE TOOLED JOINT AT CENTER OF APPROACH AND IS SHOWN HEREON. ALL OTHER SCORE LINES SHALL BE 10'=0" MAX OC.
4. WHEN ABUTTING SOIL HAS A HIGH SULFATE CONTENT, USE A MODIFIED CONCRETE MIX AND PLACE 6" MIN CLASS 2 AGGREGATE BASE AND 6 MIL PLASTIC SHEETING UNDER AND AROUND ALL SIDES OF CONCRETE IMPROVEMENTS. FOR EXPANSIVE SOIL, PLACE 6" MIN CLASS 2 AGGREGATE BASE UNDER CONCRETE IMPROVEMENTS AS DIRECTED BY THE ENGINEER.

ACCEPTABLE FILL MATERIALS: STORMTECH MC-3500 CHAMBER SYSTEMS

MATERIAL LOCATION		DESCRIPTION	AASHTO MATERIAL CLASSIFICATIONS	COMPACTION / DENSITY REQUIREMENT
D	**FINAL FILL:** FILL MATERIAL FOR LAYER 'D' STARTS FROM THE TOP OF THE 'C' LAYER TO THE BOTTOM OF FLEXIBLE PAVEMENT OR UNPAVED FINISHED GRADE ABOVE. NOTE THAT PAVEMENT SUBBASE MAY BE PART OF THE 'D' LAYER	ANY SOIL/ROCK MATERIALS, NATIVE SOILS, OR PER ENGINEER'S PLANS. CHECK PLANS FOR PAVEMENT SUBGRADE REQUIREMENTS.	N/A	PREPARE PER SITE DESIGN ENGINEER'S PLANS. PAVED INSTALLATIONS MAY HAVE STRINGENT MATERIAL AND PREPARATION REQUIREMENTS.
C	**INITIAL FILL:** FILL MATERIAL FOR LAYER 'C' STARTS FROM THE TOP OF THE EMBEDMENT STONE ('B' LAYER) TO 18" (450 mm) ABOVE THE TOP OF THE CHAMBER. NOTE THAT PAVEMENT SUBBASE MAY BE A PART OF THE 'C' LAYER.	GRANULAR WELL-GRADED SOIL/AGGREGATE MIXTURES, <35% FINES OR PROCESSED AGGREGATE. MOST PAVEMENT SUBBASE MATERIALS CAN BE USED IN LIEU OF THIS LAYER.	AASHTO M145[1] A-1, A-2-4, A-3 OR AASHTO M43[1] 3, 357, 4, 467, 5, 56, 57, 6, 67, 68, 7, 78, 8, 89, 9, 10	BEGIN COMPACTIONS AFTER 18" (450 mm) OF MATERIAL OVER THE CHAMBERS IS REACHED. COMPACT ADDITIONAL LAYERS IN 12" (300 mm) MAX LIFTS TO A MIN. 95% PROCTOR DENSITY FOR WELL GRADED MATERIAL AND 95% RELATIVE DENSITY FOR PROCESSED AGGREGATE MATERIALS.
B	**EMBEDMENT STONE:** FILL SURROUNDING THE CHAMBERS FROM THE FOUNDATION STONE ('A' LAYER) TO THE 'C' LAYER ABOVE.	CLEAN, CRUSHED, ANGULAR STONE OR RECYCLED CONCRETE[5]	AASHTO M43[1] 3, 357, 4, 467, 5, 56, 57	NO COMPACTION REQUIRED
A	**FOUNDATION STONE:** FILL BELOW CHAMBERS FROM THE SUBGRADE UP TO THE FOOT (BOTTOM) OF THE CHAMBER.	CLEAN, CRUSHED, ANGULAR STONE OR RECYCLED CONCRETE[5]	AASHTO M43[1] 3, 357, 4, 467, 5, 56, 57	PLATE COMPACT OR ROLL TO ACHIEVE A FLAT SURFACE.[2,3]

PLEASE NOTE:
1. THE LISTED AASHTO DESIGNATIONS ARE FOR GRADATIONS ONLY. THE STONE MUST ALSO BE CLEAN, CRUSHED, ANGULAR. FOR EXAMPLE, A SPECIFICATION FOR #4 STONE WOULD STATE: "CLEAN, CRUSHED, ANGULAR NO. 4 (AASHTO M43) STONE".
2. STORMTECH COMPACTION REQUIREMENTS ARE MET FOR 'A' LOCATION MATERIALS WHEN PLACED AND COMPACTED IN 9" (230 mm) (MAX) LIFTS USING TWO FULL COVERAGES WITH A VIBRATORY COMPACTOR.
3. WHERE INFILTRATION SURFACES MAY BE COMPROMISED BY COMPACTION, FOR STANDARD DESIGN LOAD CONDITIONS, A FLAT SURFACE MAY BE ACHIEVED BY RAKING OR DRAGGING WITHOUT COMPACTION EQUIPMENT. FOR SPECIAL LOAD DESIGNS, CONTACT STORMTECH FOR COMPACTION REQUIREMENTS.
4. ONCE LAYER 'C' IS PLACED, ANY SOIL/MATERIAL CAN BE PLACED IN LAYER 'D' UP TO THE FINISHED GRADE. MOST PAVEMENT SUBBASE SOILS CAN BE USED TO REPLACE THE MATERIAL REQUIREMENTS OF LAYER 'C' OR 'D' AT THE SITE DESIGN ENGINEER'S DISCRETION.
5. WHERE RECYCLED CONCRETE AGGREGATE IS USED IN LAYERS 'A' OR 'B' THE MATERIAL SHOULD ALSO MEET THE ACCEPTABILITY CRITERIA OUTLINED IN TECHNICAL NOTE 6.20 "RECYCLED CONCRETE STRUCTURAL BACKFILL".

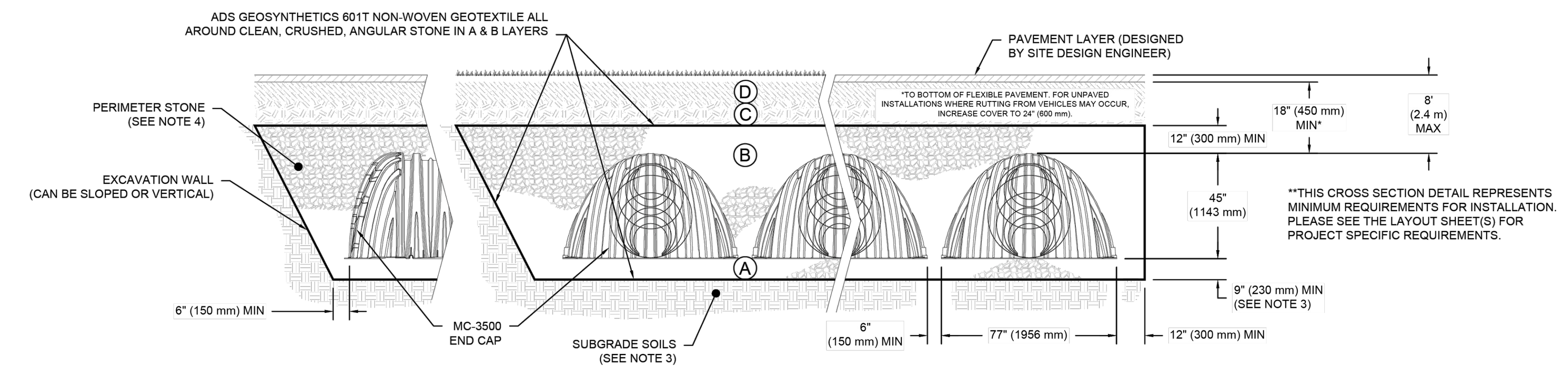

NOTES:
1. CHAMBERS SHALL MEET THE REQUIREMENTS OF ASTM F2418, "STANDARD SPECIFICATION FOR POLYPROPYLENE (PP) CORRUGATED WALL STORMWATER COLLECTION CHAMBERS" CHAMBER CLASSIFICATION 45x76 DESIGNATION SS.
2. MC-3500 CHAMBERS SHALL BE DESIGNED IN ACCORDANCE WITH ASTM F2787 "STANDARD PRACTICE FOR STRUCTURAL DESIGN OF THERMOPLASTIC CORRUGATED WALL STORMWATER COLLECTION CHAMBERS".
3. THE SITE DESIGN ENGINEER IS RESPONSIBLE FOR ASSESSING THE BEARING RESISTANCE (ALLOWABLE BEARING CAPACITY) OF THE SUBGRADE SOILS AND THE DEPTH OF FOUNDATION STONE WITH CONSIDERATION FOR THE RANGE OF EXPECTED SOIL MOISTURE CONDITIONS. REFERENCE STORMTECH DESIGN MANUAL FOR BEARING CAPACITY GUIDANCE.
4. PERIMETER STONE MUST BE EXTENDED HORIZONTALLY TO THE EXCAVATION WALL FOR BOTH VERTICAL AND SLOPED EXCAVATION WALLS.
5. REQUIREMENTS FOR HANDLING AND INSTALLATION:
   - TO MAINTAIN THE WIDTH OF CHAMBERS DURING SHIPPING AND HANDLING, CHAMBERS SHALL HAVE INTEGRAL, INTERLOCKING STACKING LUGS.
   - TO ENSURE A SECURE JOINT DURING INSTALLATION AND BACKFILL, THE HEIGHT OF THE CHAMBER JOINT SHALL NOT BE LESS THAN 3" (75 mm).
   - TO ENSURE THE INTEGRITY OF THE ARCH SHAPE DURING INSTALLATION, a) THE ARCH STIFFNESS CONSTANT AS DEFINED IN SECTION 6.2.8 OF ASTM F2418 SHALL BE GREATER THAN OR EQUAL TO 500 LBS/FT/%. AND b) TO RESIST CHAMBER DEFORMATION DURING INSTALLATION AT ELEVATED TEMPERATURES (ABOVE 73° F / 23° C), CHAMBERS SHALL BE PRODUCED FROM REFLECTIVE GOLD OR YELLOW COLORS.

STANDARD CROSS SECTION MC-3500 CHAMBER
DATE: 08/04/25 | DRAWN: SMW | DRAWING #: 724-320 | CHECKED: JLM

StormTech® Chamber System

ADS — 4640 TRUEMAN BLVD HILLIARD, OH 43026

THIS DRAWING HAS BEEN PREPARED BASED ON INFORMATION PROVIDED TO ADS/STORMTECH UNDER THE DIRECTION OF THE PROJECT'S ENGINEER OF RECORD ("EOR") OR OTHER PROJECT REPRESENTATIVE. THIS DRAWING IS NOT INTENDED FOR USE IN BIDDING OR CONSTRUCTION WITHOUT THE EOR'S PRIOR APPROVAL. EOR SHALL REVIEW THIS DRAWING PRIOR TO BIDDING AND/OR CONSTRUCTION. IT IS THE ULTIMATE RESPONSIBILITY OF THE EOR TO ENSURE THAT THE PRODUCT(S) DEPICTED AND ALL ASSOCIATED DETAILS MEET ALL APPLICABLE LAWS, REGULATIONS, AND PROJECT REQUIREMENTS.

SHEET 1 OF 1

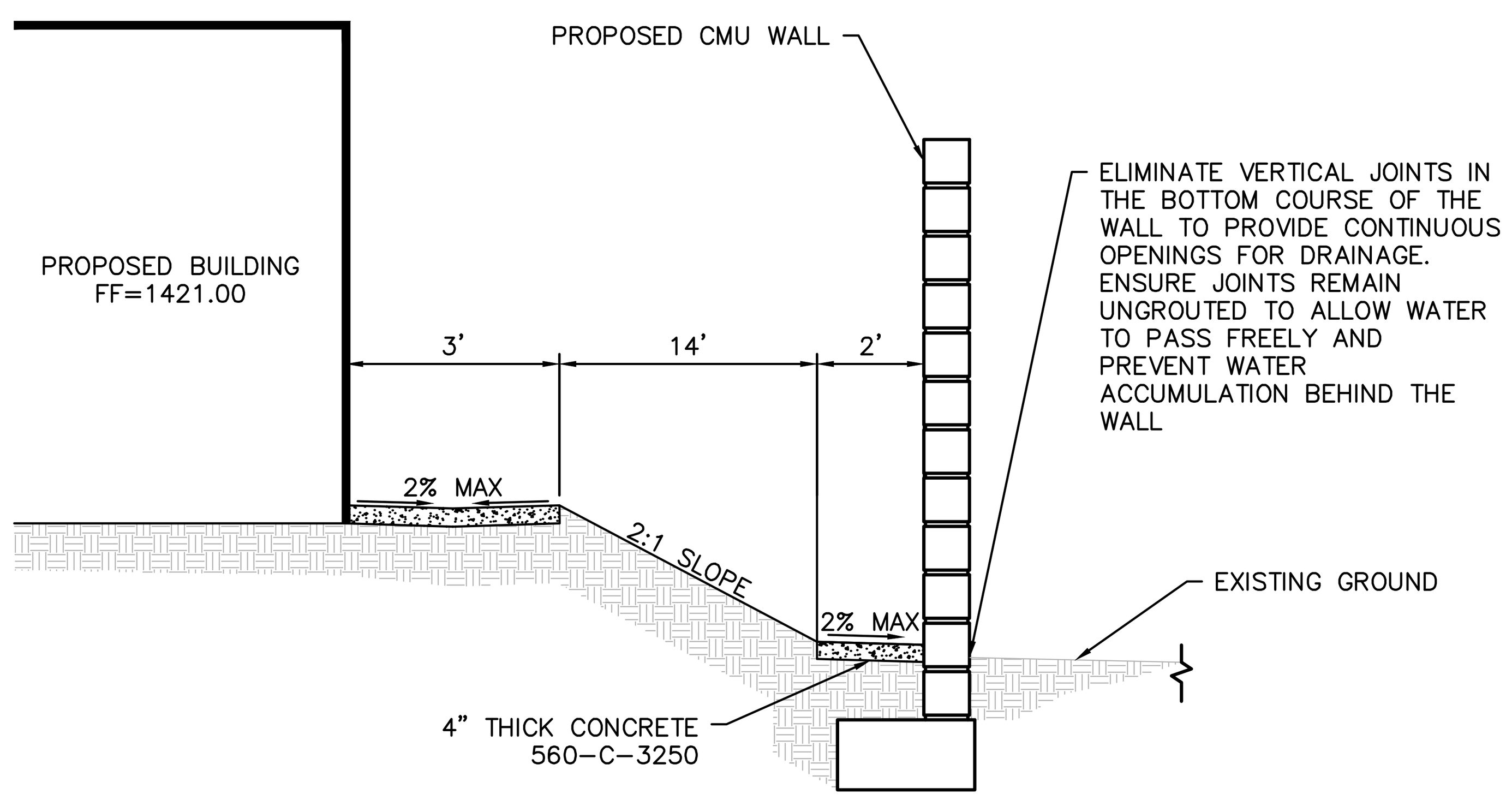

SECTION C-C
N.T.S.

THE ECOSTREAM BIOFILTER™ IS A BIOFILTRATION STORMWATER TREATMENT TECHONOLOGY THAT RELIES ON PHYSICAL, CHEMICAL AND BIOLOGICAL MECHANISMS TO REMOVE TOTAL SUSPENDED SOLIDS, TOTAL PHOSPHORUS, TOTAL NITROGEN, HEAVY METALS, OIL AND GREASE, TRASH AND BACTERIA.

Model	Vault Size (ft)	Media Filtration Area (sf)	Min Inlet to Outlet Depth[1] (in)	Overflow to Outlet Depth (in)	Design Treatment Rate (cfs)	Bypass Standpipe (in)	Solid Lid Size & Number
ES16B	4 x 4	16	32	32	0.147	6	36 in (1x)
ES24B	4 x 6	24	32	32	0.221	6	36 in (1x)
ES32B	4 x 8	32	32	32	0.294	6	36 in (1x)
ES36B	6 x 6	36	32	32	0.331	6	36 in (1x)
ES40B	4 x 10	40	32	32	0.368	6	36 in (1x)
ES48B	4 x 12	48	32	32	0.441	6	36 in (2x)
ES48B	6 x 8	48	32	32	0.441	6	36 in (1x)
ES60B	6 x 10	60	32	32	0.551	8	36 in (1x)
ES72B	6 x 12	72	32	32	0.662	8	36 in (2x)
ES80B	8 x 10	80	32	32	0.735	8	36 in (1x)
ES96B	8 x 12	96	32	32	0.882	10	36 in (2x)
ES112B	8 x 14	112	32	32	1.029	10	36 in (2x)
ES128B	8 x 16	128	32	32	1.176	10	36 in (2x)

[1] A min drop of 29" can be used however the design engineer must review the 3" tailwater (up to the beehive bypass) on the inlet pipe to ensure it does not affect the project's overall design.

NOTES:
- UNDERDRAIN SHOWN IS SCHEMATIC ONLY. FOR DETAILS ON UNDERDRAIN SIZING AND LAYOUT SEE ECOSTREAM INSTALLATION GUIDE FOR DETAILS, KIT NUMBER AND PLACEMENT OPTIONS.

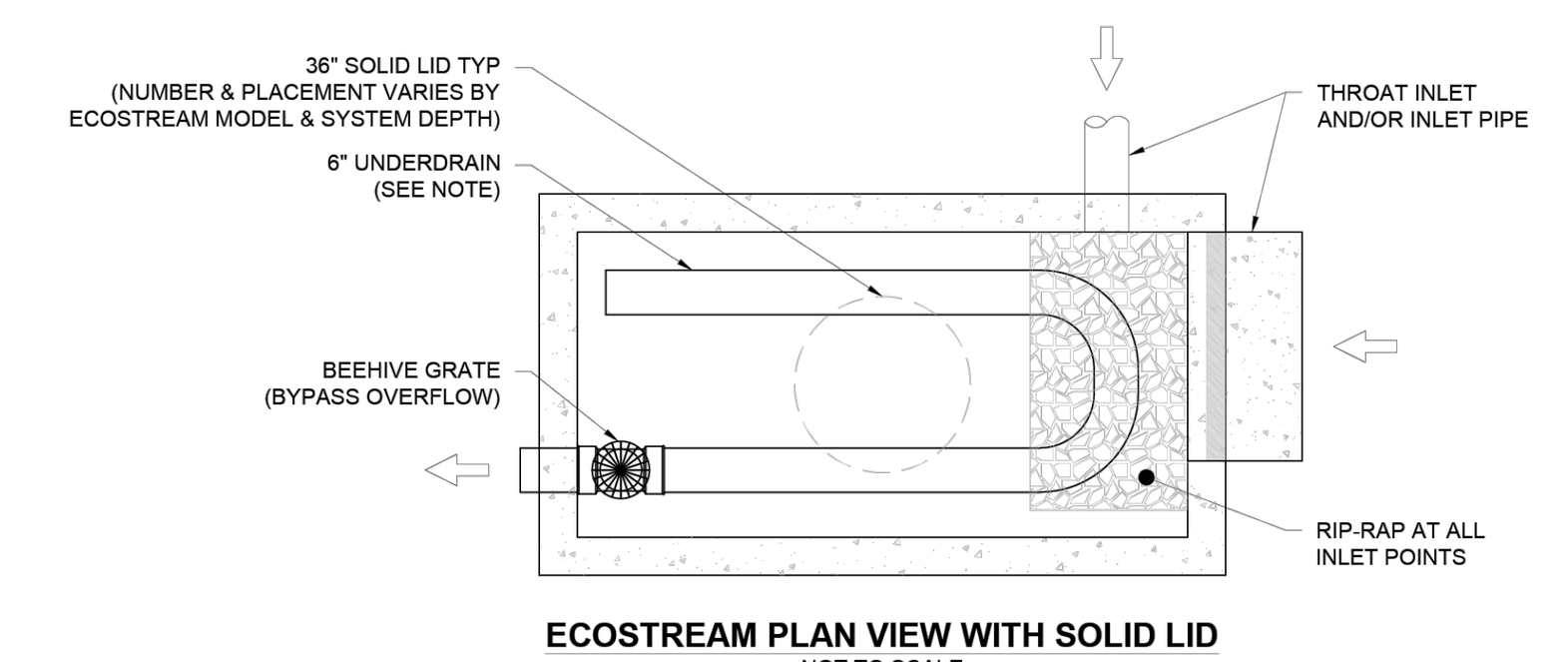

ECOSTREAM PLAN VIEW WITH SOLID LID
NOT TO SCALE

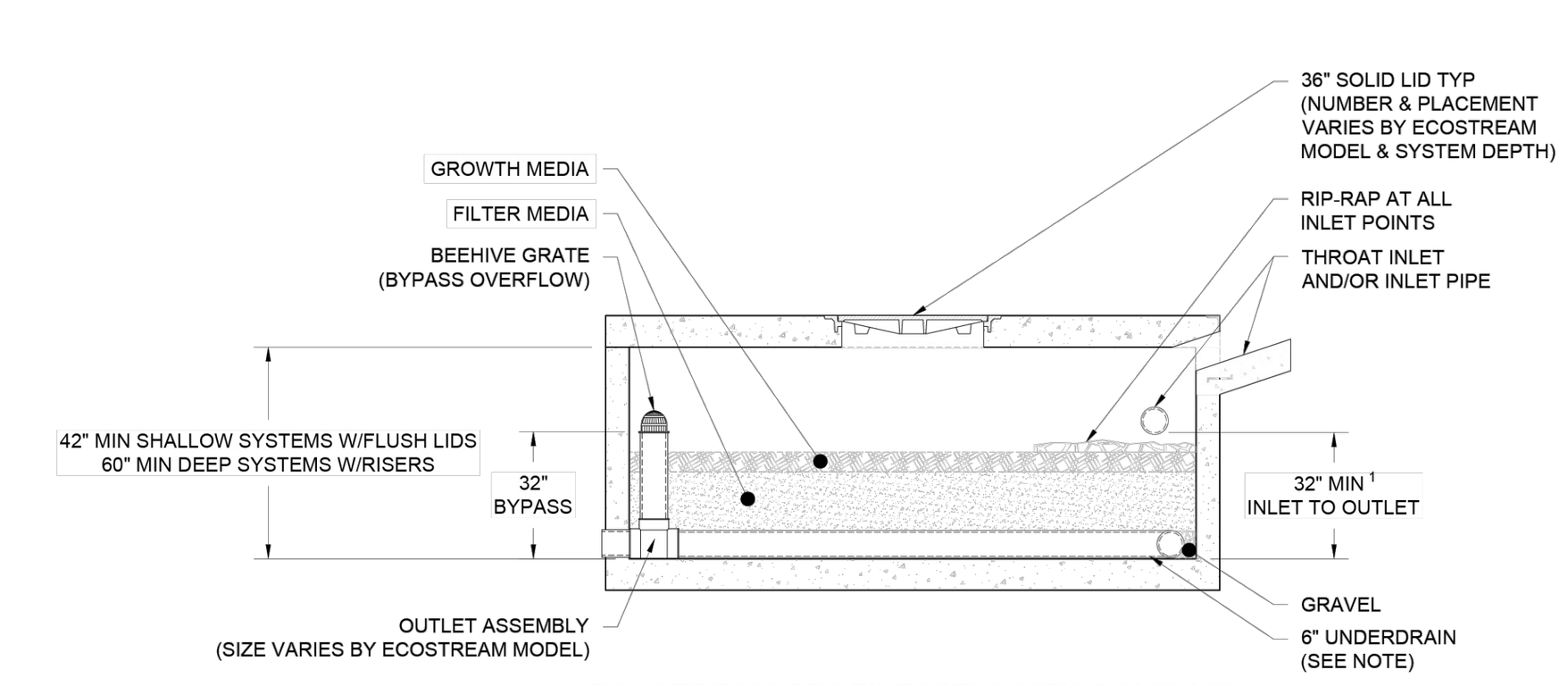

ECOSTREAM PROFILE VIEW WITH SOLID LID
NOT TO SCALE

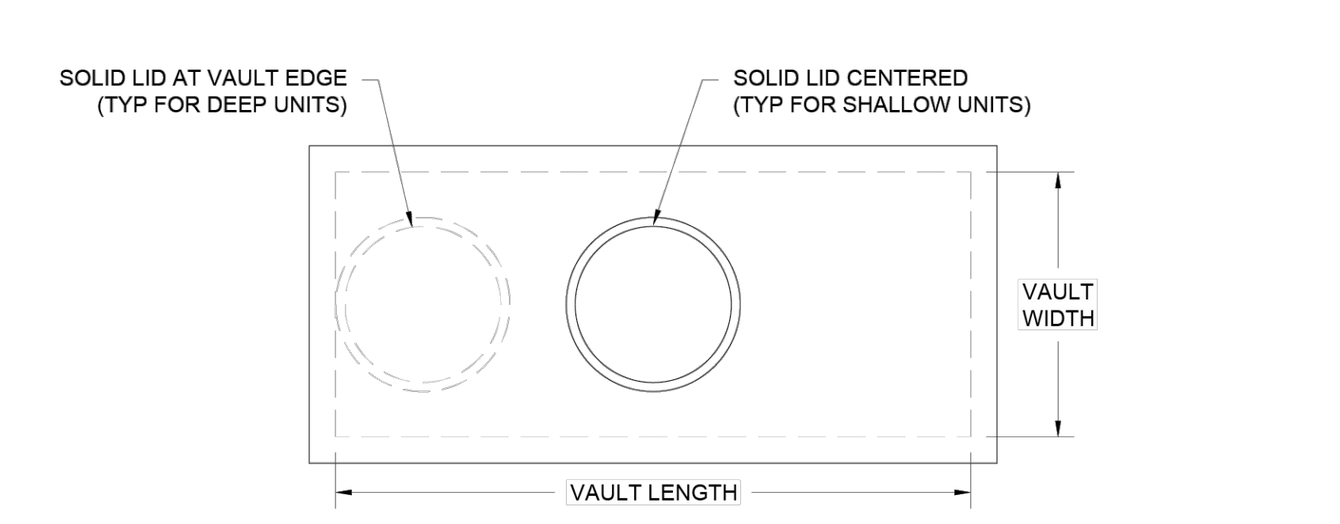

SOLID LID PLACEMENT
SIZE AND NUMBER OF SOLID LIDS VARY BY ECOSTREAM MODEL & SYSTEM DEPTH

ADS ECOSTREAM SPECIFICATIONS

PRODUCTS
A. INTERNAL COMPONENTS: SHALL BE SUBSTANTIALLY CONSTRUCTED OF RECYCLED POLYETHYLENE OR OTHER THERMOPLASTIC MATERIAL APPROVED BY THE MANUFACTURER
B. FILTER MEDIA: FILTER MEDIA SHALL BE BY ADS AND SHALL CONSIST OF A PROPRIETARY BLEND OF FILTER MEDIA.
C. PRECAST CONCRETE VAULT: DESIGNED FOR H-20 TRAFFIC LOADING AND APPLICABLE SOIL LOADS OR AS OTHERWISE DETERMINED BY A LICENSED PROFESSIONAL ENGINEER. THE MATERIALS AND STRUCTURAL DESIGN OF THE DEVICES SHALL BE PER ASTM C478, ASTM C857 AND ASTM C858.

PERFORMANCE
A. THE STORMWATER FILTER SYSTEM SHALL BE AN ONLINE OR OFFLINE DESIGN BASED ON LOCAL REQUIREMENTS CAPABLE OF TREATING 100% OF THE REQUIRED TREATMENT FLOW AT FULL SEDIMENT LOAD CONDITIONS.
B. THE STORMWATER FILTER SYSTEM SHALL HAVE NO MOVING PARTS.
C. THE STORMWATER TREATMENT UNIT SHALL BE DESIGNED TO REMOVE AT LEAST 80% OF SUSPENDED SOLIDS.

ECOSTREAM INSTALLATION NOTES

INSTALLATION OF THE STORMWATER TREATMENT UNIT(S) SHALL BE PERFORMED PER MANUFACTURER'S INSTALLATION INSTRUCTIONS. SUCH INSTRUCTIONS CAN BE OBTAINED BY CALLING ADVANCED DRAINAGE SYSTEMS AT (800) 821-6710 OR BY LOGGING ON TO WWW.ADSPIPE.COM.

ECOSTREAM BIOFILTER SOLID LID INSTALLATION BASIC MEDIA
DATE: 09/04/24 | DRAWN: JLM | DRAWING #: 570-020 | CHECKED: SMW

DATE	DWN	CHK
8/14/2025	JLM	AT

EcoStream™ Biofilter Stormwater Media Filters

ADS — 4640 TRUEMAN BLVD HILLIARD, OH 43026

SHEET 1 OF 1

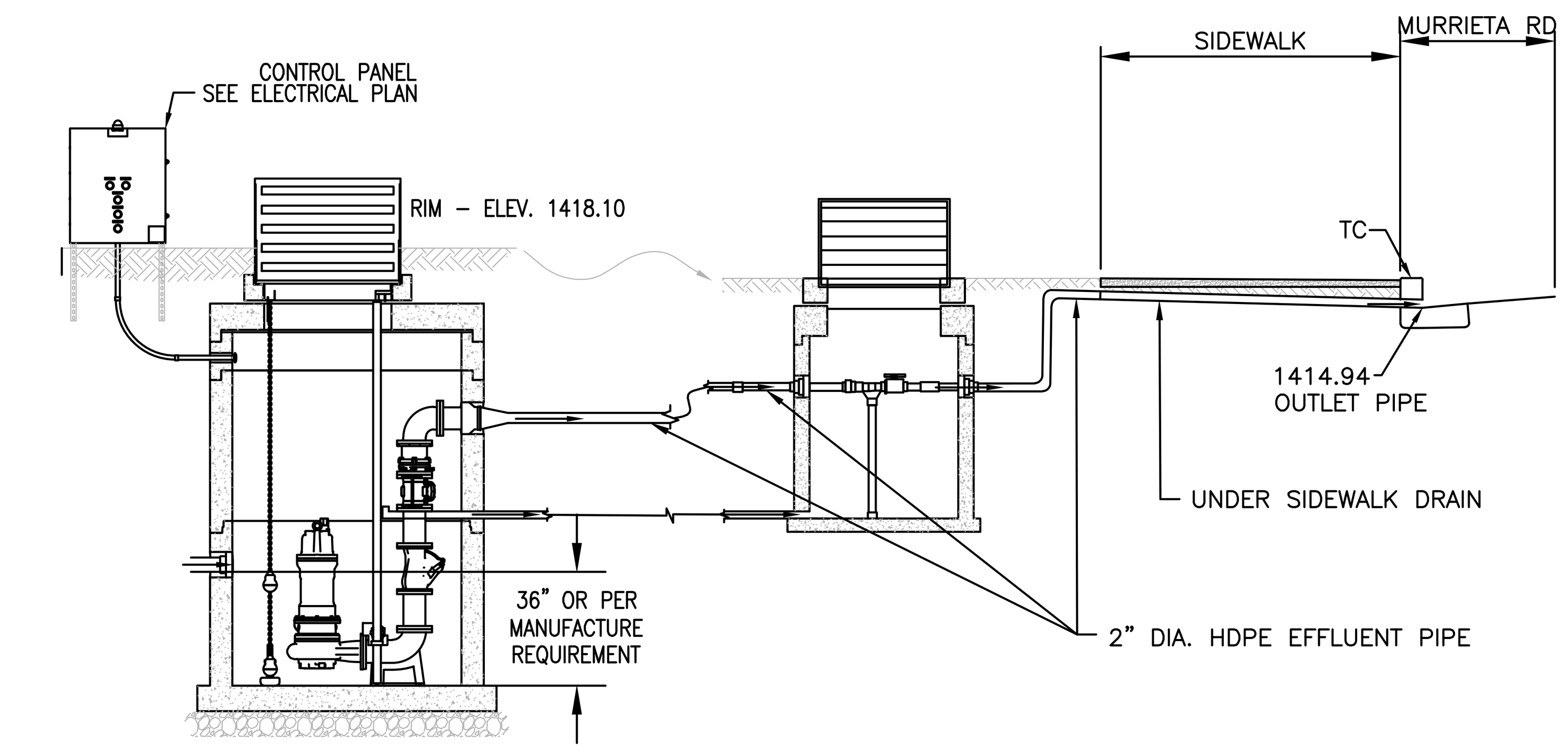

DETAIL "J"
DUPLEX PUMP SYSTEM
N.T.S.

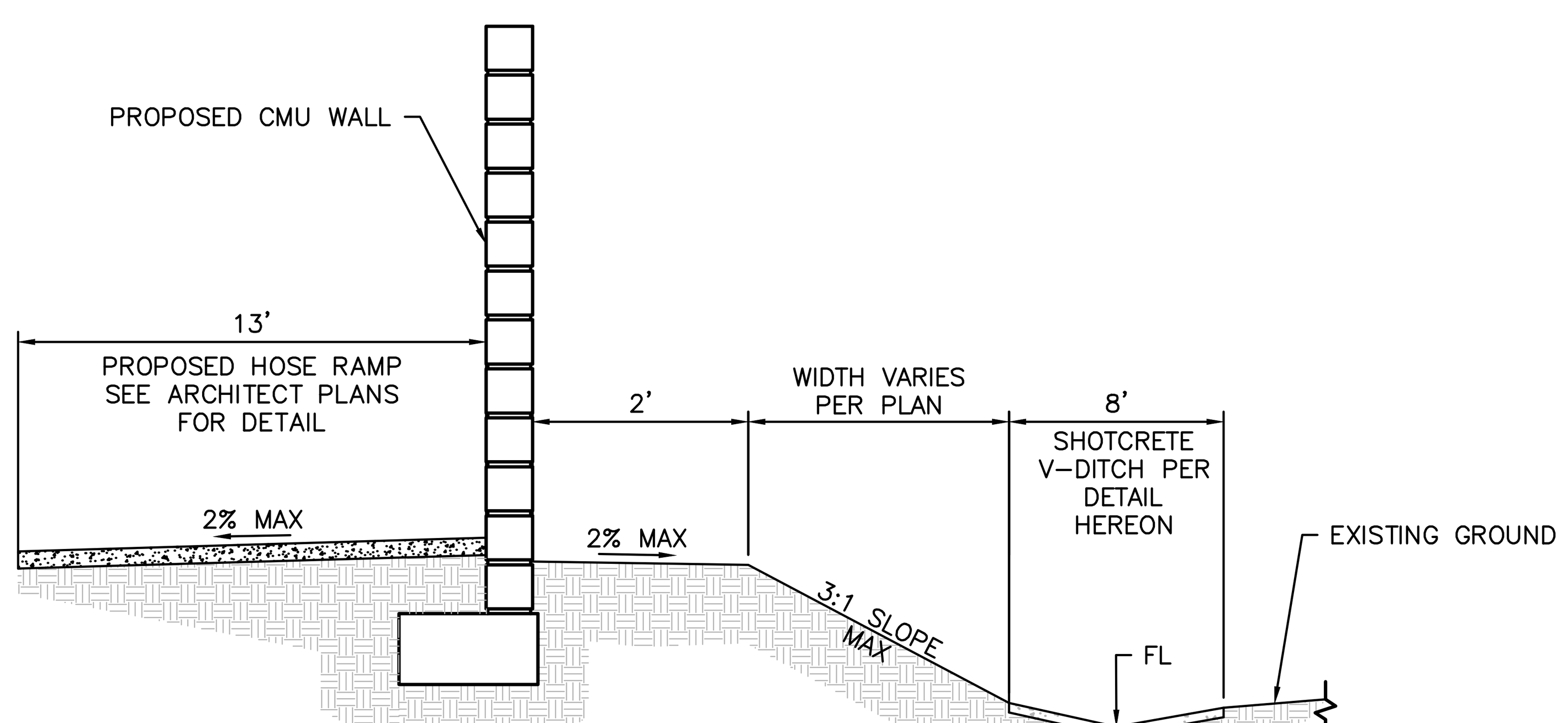

SECTION D-D
N.T.S.

DIG ALERT
DIAL TOLL FREE
811
AT LEAST TWO DAYS BEFORE YOU DIG
UNDERGROUND SERVICE ALERT OF SOUTHERN CALIFORNIA

DATE	BY	MARK		APPR.	DATE
ENGINEER			REVISIONS	CITY	

DESIGNED BY: DRAWN BY: CHECKED BY:

PREPARED BY:
ERSC INC.COM
Engineering Resources of Southern California
1861 West Redlands Blvd.
Redlands, CA 92373
P: 909.890.1255

JOHN M. BRUDIN DATE

SEAL
REGISTERED PROFESSIONAL ENGINEER
JOHN M. BRUDIN
No. 41836
CIVIL
STATE OF CALIFORNIA

APPROVED BY: DATE:

CITY ENGINEER

CITY OF PERRIS
ENGINEERING DEPARTMENT
24 S. D ST. SUITE 100
PERRIS CA 92570
951-956-2120

SCALE: AS SHOWN
DATE:
BENCHMARK:
SEE ON SHEET 1

CITY OF PERRIS, CALIFORNIA
SOUTH PERRIS FIRE STATION
CIP F077
SECTIONS AND DETAILS

FOR: CITY OF PERRIS
W.O.

SHEET NO.
C-3
OF 9 SHEETS
FILE NO.

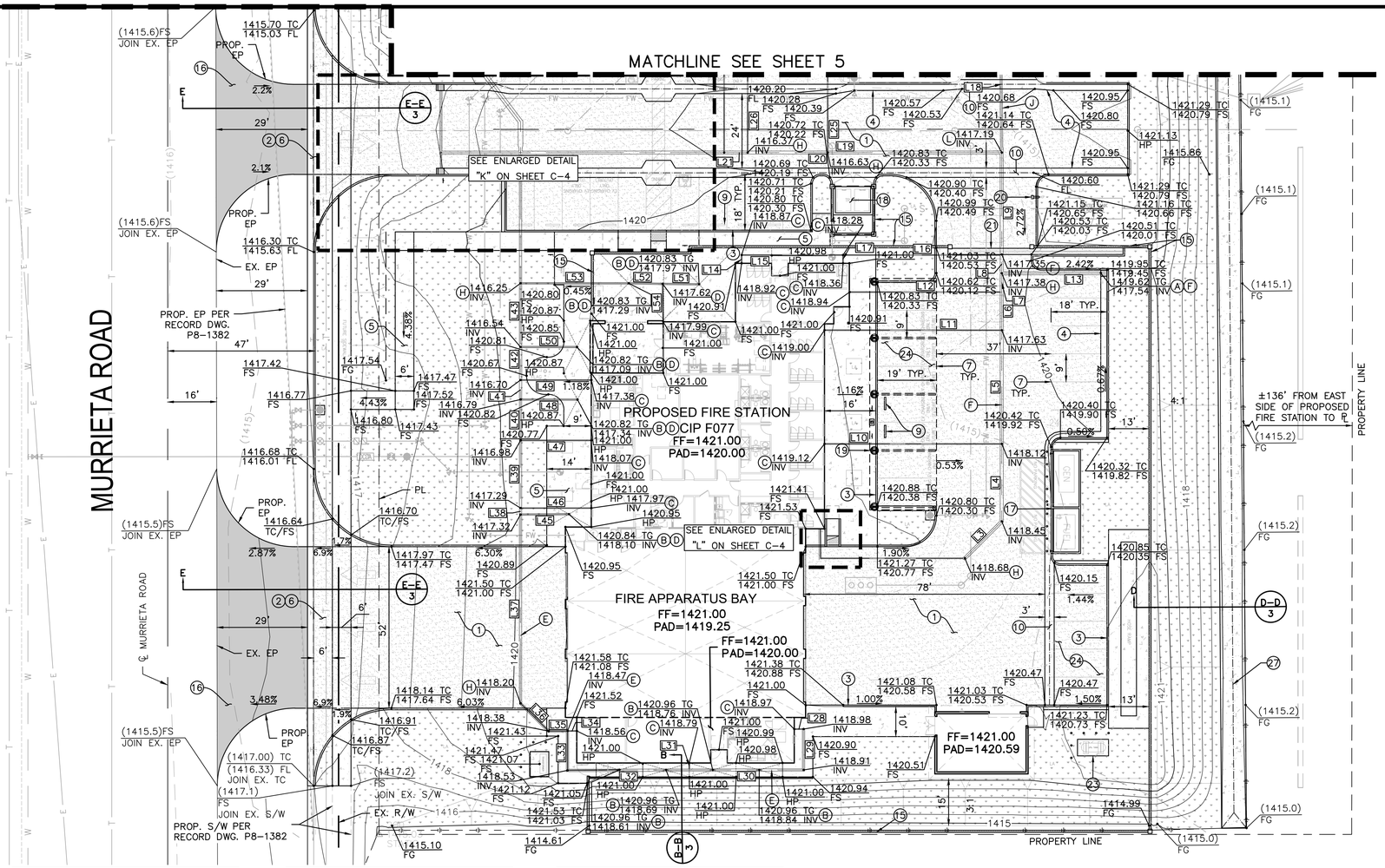

LEGEND

- CONSTRUCT PCC SIDEWALK
- CONSTRUCT PCC IMPROVEMENTS
- LANDSCAPE AREA

GRADING CONSTRUCTION NOTES

1. CONSTRUCT 9-INCH PCC PAVEMENT OVER 12-INCH OF CLASS 2 AGGREGATE BASE COMPACTED 95% RELATIVE COMPACTION.
2. CONSTRUCT 12-INCH PCC PAVEMENT OVER 12-INCH OF CLASS 2 AGGREGATE BASE COMPACTED 95% RELATIVE COMPACTION, SEE SHEET C-2.
3. CONSTRUCT 6" PCC CURB PER RIVERSIDE COUNTY STD 204.
4. CONSTRUCT 6" PCC CURB AND GUTTER PER RIVERSIDE COUNTY STD 200.
5. CONSTRUCT 4" THICK PCC SIDEWALK OVER COMPACTED SUBGRADE PER RIVERSIDE COUNTY STD 400.
6. CONSTRUCT COMMERCIAL DRIVEWAY APPROACH PER RIVERSIDE COUNTY STD 207A (MODIFIED PER PLANS).
7. CONSTRUCT 4" WHITE LINE THERMOPLASTIC PARKING STRIPING PER ARCHITECT SPECIFICATIONS.
8. CONSTRUCT ADA PARKING STALL PER DETAIL "A" ON SHEET C-2.
9. CONSTRUCT CONCRETE WHEEL STOP PER DETAIL "B" ON SHEET C-2.
10. CONSTRUCT 3-FOOT CROSS GUTTER PER DETAIL "C" ON SHEET C-2.
11. INSTALL YELLOW DETECTABLE WARNING MAT PER DETAIL "D" ON SHEET C-2.
13. CONSTRUCT CURB RAMP PER RIVERSIDE COUNTY STD 403, CASE C.
15. CONSTRUCT CMU WALL PER ARCHITECTURAL PLAN, SEE DETAIL 1 ON SHEET A1.5.
16. CONSTRUCT 0.30' THICK AC OVER 6" OF CLASS 2 AGGREGATE BASE MATERIAL.
17. CONSTRUCT ABOVE GROUND FUEL TANK, GENERATOR, CONCRETE CONTAINMENT POND, SHADE CANOPY, AND PIPE BOLLARDS PER ARCHITECTURAL PLAN, SEE DETAIL 12 ON SHEET A1.2.
18. CONSTRUCT TRASH ENCLOSURE PER ARCHITECTURAL PLAN, SEE DETAIL 2 ON SHEET A1.2.
19. CONSTRUCT CANOPY PER ARCHITECTURAL PLAN, SEE SHEET A1.6.
20. CONSTRUCT MOTORIZED GATE KEYPAD ON PEDESTAL AND PIPE BOLLARDS PER ARCHITECTURAL PLAN, SEE DETAIL 12 ON SHEET A1.3. FIRE DEPARTMENT KNOX KEY SWITCH REQUIRED AT KEYPAD PEDESTAL CONTROL BOX.
21. CONSTRUCT ORNAMENTAL MOTORIZED ROLLING GATE AND COMPONENTS PER ARCHITECTURAL PLAN, SEE DETAIL 5 ON SHEET A1.3.
23. CONSTRUCT LPG TANK, CONCRETE PAD, AND PIPE BOLLARDS PER ARCHITECTURAL PLAN, SEE DETAIL 5 ON SHEET A1.1.
24. CONSTRUCT 5-INCH PCC PAVEMENT OVER 6-INCH OF CLASS 2 AGGREGATE BASE COMPACTED 95% RELATIVE COMPACTION.
25. CONSTRUCT CURB RAMP PER RIVERSIDE COUNTY STD 403, CASE D, MODIFIED PER PLANS.
27. CONSTRUCT SHOTCRETE V-DITCH W=8' PER DETAIL "E" ON SHEET C-2.

STROM DRAIN NOTES

- (A) INSTALL 24"X24" JENSEN PRECAST DROP INLET BASIN MODEL 2424 WITH GRATE, OR APPROVED EQUAL.
- (B) INSTALL 6" ROUND GRATE COVER PER DETAIL "G" ON SHEET C-2.
- (C) INSTALL 4" HDPE PIPE OR APPROVED EQUAL.
- (D) INSTALL 6" HDPE PIPE OR APPROVED EQUAL.
- (E) INSTALL 9" HDPE PIPE OR APPROVED EQUAL.
- (F) INSTALL 12" HDPE PIPE OR APPROVED EQUAL.
- (G) INSTALL 18" HDPE PIPE OR APPROVED EQUAL.
- (H) 6" CLEAN OUT.
- (J) 9X12 HDPE INCREASER.
- (K) 12X18 HDPE INCREASER.
- (L) 12X12X12 HDPE TEE.
- (M) 12X12X12X12 HDPE CROSS.

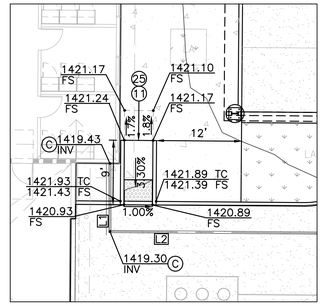

ENLARGED DETAIL "L"
SCALE: 1"=10'

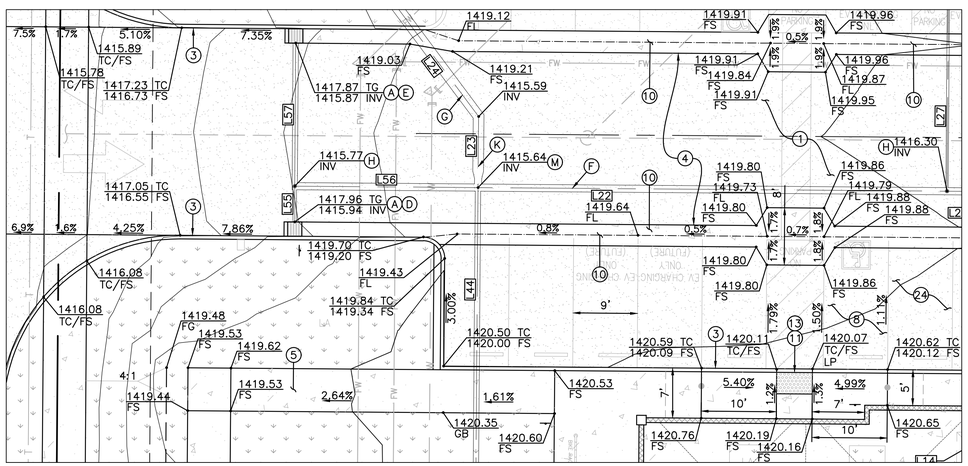

ENLARGED DETAIL "K"
SCALE: 1"=10'

SCALE 1"=20'
0 20 40 60
FEET

STORM DRAIN LINE DATA			
LINE #	LENGTH	DIRECTION	SLOPE
L1	9.5'	S0° 00' 34.66"E	1.34%
L2	46.4'	S89° 33' 24.83"E	1.34%
L3	16.8'	N45° 26' 35.17"E	1.34%
L4	25.0'	N0° 26' 35.17"E	1.34%
L5	36.6'	N0° 26' 35.17"E	1.34%
L6	12.3'	N0° 26' 35.17"E	1.34%
L7	6.1'	N0° 26' 35.17"E	1.34%
L8	5.9'	N0° 26' 35.17"E	0.50%
L9	33.0'	N0° 26' 35.54"E	0.50%
L10	57.0'	S89° 32' 17.46"E	1.76%
L11	57.0'	S89° 32' 18.70"E	2.41%
L12	49.0'	S89° 33' 24.83"E	3.02%
L13	31.9'	N89° 33' 24.83"W	0.50%
L14	2.7'	N0° 26' 35.27"E	1.82%
L15	32.6'	S89° 33' 24.81"E	1.82%
L16	51.1'	S89° 33' 24.81"E	1.82%
L17	2.7'	N0° 26' 35.23"E	3.00%
L18	25.1'	N0° 01' 08.48"W	0.57%
L19	56.0'	N89° 33' 24.73"W	1.00%

STORM DRAIN LINE DATA			
LINE #	LENGTH	DIRECTION	SLOPE
L20	25.8'	N89° 33' 24.73"W	1.00%
L21	7.6'	N89° 33' 24.67"W	1.00%
L22	65.5'	N89° 33' 24.74"W	1.00%
L23	9.9'	N0° 25' 59.64"E	1.00%
L24	19.1'	N36° 42' 22.20"W	0.50%
L25	25.1'	N0° 26' 35.17"E	3.00%
L26	25.1'	N0° 26' 35.27"E	3.00%
L27	25.1'	N0° 26' 35.32"E	3.00%
L28	3.0'	N89° 57' 57.31"E	0.50%
L29	13.2'	S0° 26' 26.45"W	0.50%
L30	36.8'	N89° 39' 15.81"W	0.50%
L31	2.3'	S0° 26' 37.36"W	3.00%
L32	39.2'	N89° 39' 15.81"W	0.50%
L33	12.7'	N0° 23' 11.86"E	0.50%
L34	3.0'	N89° 55' 20.76"W	3.00%
L35	6.1'	N89° 55' 20.76"W	1.44%
L36	12.7'	N44° 55' 20.76"W	1.44%
L37	60.8'	N0° 26' 39.19"E	1.44%
L38	2.1'	N0° 26' 47.52"E	1.44%

STORM DRAIN LINE DATA			
LINE #	LENGTH	DIRECTION	SLOPE
L39	21.8'	N0° 26' 47.52"E	1.44%
L40	13.2'	N0° 26' 47.52"E	1.44%
L41	6.3'	N0° 36' 06.76"E	1.44%
L42	10.6'	N0° 25' 59.64"E	1.44%
L43	20.5'	N0° 25' 59.64"E	1.44%
L44	42.1'	N0° 25' 59.64"E	1.44%
L45	15.6'	S89° 59' 59.00"E	3.00%
L46	22.8'	N89° 33' 12.48"W	3.00%
L47	22.7'	N89° 34' 03.08"W	3.00%
L48	18.3'	S89° 31' 15.86"E	3.00%
L49	22.7'	N89° 34' 02.43"W	3.00%
L50	18.2'	S89° 35' 26.69"E	3.00%
L51	11.8'	N88° 41' 43.41"W	3.00%
L52	10.9'	N88° 41' 43.41"W	3.00%
L53	34.8'	N89° 32' 36.43"W	3.00%
L54	12.2'	N0° 27' 39.80"W	3.00%
L55	5.0'	N0° 00' 00.00"E	3.40%
L56	25.6'	S89° 33' 24.73"E	0.50%
L57	20.0'	N0° 23' 19.53"E	0.50%

DIG ALERT
DIAL TOLL FREE 811
AT LEAST TWO DAYS BEFORE YOU DIG
UNDERGROUND SERVICE ALERT OF SOUTHERN CALIFORNIA

DATE	BY	MARK	REVISIONS	APPR.	DATE
				CITY	

DESIGNED BY: DRAWN BY: CHECKED BY:

PREPARED BY:
ERSC INC.COM
Engineering Resources of Southern California
1861 West Redlands Blvd.
Redlands, CA 92373
P: 909.890.1255
JOHN M. BRUDIN DATE

SEAL
REGISTERED PROFESSIONAL ENGINEER JOHN M. BRUDIN No. 41836 CIVIL STATE OF CALIFORNIA

APPROVED BY: DATE:
CITY ENGINEER

CITY OF PERRIS ENGINEERING DEPARTMENT
24 S. D ST. SUITE 100
PERRIS CA 92570
951-956-2120

SCALE: AS SHOWN
DATE:

BENCHMARK: SEE ON SHEET 1

CITY OF PERRIS, CALIFORNIA
SOUTH PERRIS FIRE STATION
CIP F077
PRECISE GRADING PLAN

FOR: CITY OF PERRIS W.O.

SHEET NO. C-4 OF 9 SHEETS
FILE NO.

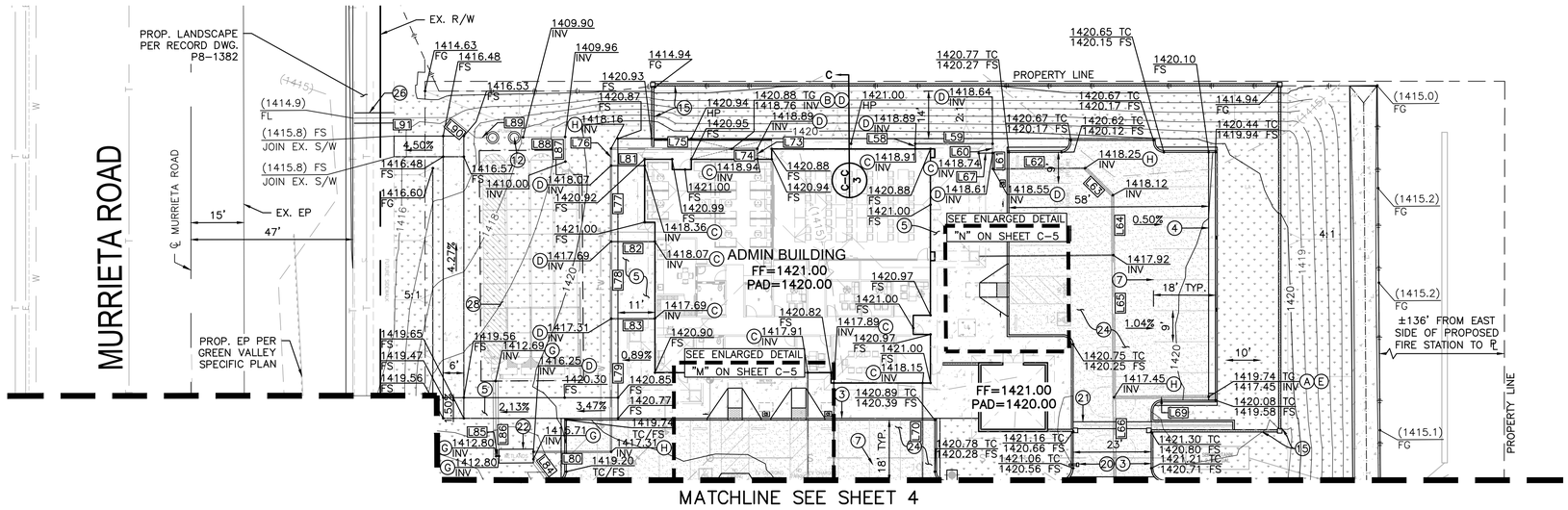

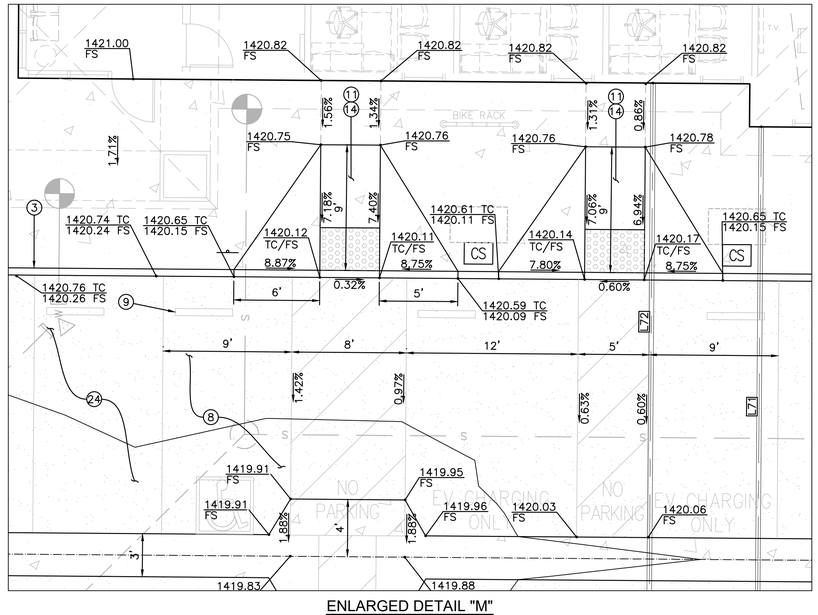

ENLARGED DETAIL "M"
SCALE: 1"=5'

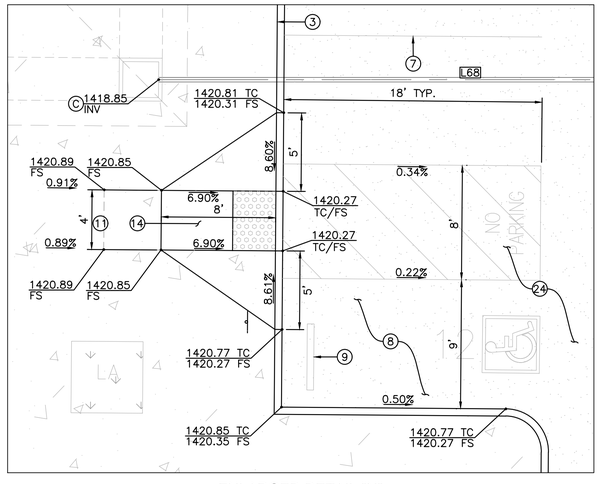

ENLARGED DETAIL "N"
SCALE: 1"=5'

LEGEND

- CONSTRUCT PCC SIDEWALK
- CONSTRUCT PCC IMPROVEMENTS
- LANDSCAPE AREA

GRADING CONSTRUCTION NOTES

1. CONSTRUCT 9-INCH PCC PAVEMENT OVER 12-INCH OF CLASS 2 AGGREGATE BASE COMPACTED 95% RELATIVE COMPACTION.
2. CONSTRUCT 12-INCH PCC PAVEMENT OVER 12-INCH OF CLASS 2 AGGREGATE BASE COMPACTED 95% RELATIVE COMPACTION, SEE SHEET C-2.
3. CONSTRUCT 6" PCC CURB PER RIVERSIDE COUNTY STD 204.
4. CONSTRUCT 6" PCC CURB AND GUTTER PER RIVERSIDE COUNTY STD 200.
5. CONSTRUCT 4" THICK PCC SIDEWALK OVER COMPACTED SUBGRADE PER RIVERSIDE COUNTY STD 400.
6. CONSTRUCT COMMERCIAL DRIVEWAY APPROACH PER RIVERSIDE COUNTY STD 207A (MODIFIED PER PLANS).
7. CONSTRUCT 4" WHITE LINE THERMOPLASTIC PARKING STRIPING PER ARCHITECT SPECIFICATIONS.
8. CONSTRUCT ADA PARKING STALL PER DETAIL "A" ON SHEET C-2.
9. CONSTRUCT CONCRETE WHEEL STOP PER DETAIL "B" ON SHEET C-2.
10. CONSTRUCT 3-FOOT CROSS GUTTER PER DETAIL "C" ON SHEET C-2.
11. INSTALL YELLOW DETECTABLE WARNING MAT PER DETAIL "D" ON SHEET C-2.
12. INSTALL PSI PACIFIC SOUTHWEST PUMP SYSTEM PER DETAIL ON SHEET C-3, OR APPROVED EQUAL.
13. CONSTRUCT CURB RAMP PER RIVERSIDE COUNTY STD 403, CASE C.
14. CONSTRUCT CURB RAMP PER RIVERSIDE COUNTY STD 403, CASE A.
15. CONSTRUCT RETAINING WALL PER ARCHITECTURAL PLAN, SEE DETAIL 1 ON SHEET A1.5.
16. CONSTRUCT 0.30' THICK AC OVER 6" OF CLASS 2 AGGREGATE BASE MATERIAL.
17. CONSTRUCT ABOVE GROUND FUEL TANK, GENERATOR, CONCRETE CONTAINMENT POND, SHADE CANOPY, AND PIPE BOLLARDS PER ARCHITECTURAL PLAN, SEE DETAIL 12 ON SHEET A1.2.
18. CONSTRUCT TRASH ENCLOSURE PER ARCHITECTURAL PLAN, SEE DETAIL 2 ON SHEET A1.2.
19. CONSTRUCT CANOPY PER ARCHITECTURAL PLAN, SEE SHEET A1.6.
20. CONSTRUCT MOTORIZED GATE KEYPAD ON PEDESTAL AND PIPE BOLLARDS PER ARCHITECTURAL PLAN, SEE DETAIL 12 ON SHEET A1.3. FIRE DEPARTMENT KNOX KEY SWITCH REQUIRED AT KEYPAD PEDESTAL CONTROL BOX.
21. CONSTRUCT ORNAMENTAL MOTORIZED ROLLING GATE AND COMPONENTS PER ARCHITECTURAL PLAN, SEE DETAIL 5 ON SHEET A1.3.
22. INSTALL 4'X12' ES48E ECOSTREAM BIOFILTER SOLID LID MODULAR WETLANDS SYSTEM PER DETAIL ON SHEET C-2 AND WQMP REPORT, OR APPROVED EQUAL.
23. CONSTRUCT LPG TANK, CONCRETE PAD, AND PIPE BOLLARDS PER ARCHITECTURAL PLAN, SEE DETAIL 5 ON SHEET A1.1.
24. CONSTRUCT 5-INCH PCC PAVEMENT OVER 6-INCH OF CLASS 2 AGGREGATE BASE COMPACTED 95% RELATIVE COMPACTION.
26. CONSTRUCT UNDER SIDEWALK DRAIN PER RIVERSIDE COUNTY STD 309. W=3'.
27. CONSTRUCT SHOTCRETE V-DITCH W=8' PER DETAIL "E" ON SHEET C-2.
28. INSTALL ADS MC-3500 STORMTECH CHAMBER PER PLANS AND SEPARATE ADS CHAMBERS DESIGN DOCUMENTS PER DETAIL ON SHEET C-3 AND WQMP REPORT, OR APPROVED EQUAL.

STROM DRAIN NOTES

- (A) INSTALL 24"X24" JENSEN PRECAST DROP INLET BASIN MODEL 2424 WITH GRATE, OR APPROVED EQUAL.
- (B) INSTALL 6" ROUND GRATE COVER PER DETAIL "G" ON SHEET C-2.
- (C) INSTALL 4" HDPE PIPE OR APPROVED EQUAL.
- (D) INSTALL 6" HDPE PIPE OR APPROVED EQUAL.
- (E) INSTALL 9" HDPE PIPE OR APPROVED EQUAL.
- (F) INSTALL 12" HDPE PIPE OR APPROVED EQUAL.
- (G) INSTALL 18" HDPE PIPE OR APPROVED EQUAL.
- (H) 6" CLEAN OUT.

STORM DRAIN LINE DATA			
LINE #	LENGTH	DIRECTION	SLOPE
L58	1.5'	N0° 26' 35.23"E	1.14%
L59	22.5'	S89° 33' 24.77"E	1.14%
L60	2.7'	S0° 00' 00.00"E	1.14%
L61	4.6'	S0° 00' 00.00"E	1.14%
L62	26.8'	N90° 00' 00.00"E	1.14%
L63	11.3'	S45° 00' 00.00"E	1.14%
L64	17.4'	S0° 02' 23.22"W	1.14%
L65	41.3'	S0° 02' 23.22"W	1.14%
L66	24.1'	S0° 01' 08.48"E	0.57%
L67	4.1'	N90° 00' 00.00"E	3.21%
L68	39.1'	N90° 00' 00.00"E	2.37%
L69	27.4'	S89° 55' 08.98"E	0.50%
L70	28.2'	N0° 26' 36.76"E	3.00%
L71	28.3'	N0° 26' 36.86"E	3.00%
L72	31.2'	N0° 26' 36.75"E	3.00%
L73	3.0'	N0° 00' 00.00"E	1.72%
L74	7.5'	N90° 00' 00.00"W	1.72%

STORM DRAIN LINE DATA			
LINE #	LENGTH	DIRECTION	SLOPE
L75	35.0'	N89° 25' 20.86"W	1.72%
L76	5.0'	S0° 26' 35.05"W	1.72%
L77	22.1'	S0° 26' 35.05"W	1.72%
L78	22.4'	S0° 26' 35.05"W	1.72%
L79	38.7'	S0° 26' 35.05"W	1.72%
L80	22.5'	N89° 33' 24.95"W	1.72%
L81	9.7'	N89° 33' 24.95"W	3.00%
L82	12.7'	N89° 33' 24.81"W	3.00%
L83	12.7'	N89° 33' 24.81"W	3.00%
L84	7.6'	S36° 42' 22.20"E	0.50%
L85	0.8'	N90° 00' 00.00"W	0.50%
L86	21.8'	N0° 00' 00.00"E	0.50%
L87	7.2'	N0° 00' 00.00"E	0.50%
L88	13.5'	N90° 00' 00.00"W	0.50%
L89	3.7'	N90° 00' 00.00"W	0.50%
L90	9.2'	N49° 55' 15.87"W	0.50%
L91	28.6'	N89° 59' 34.00"W	0.50%

SCALE 1"=20'
0 20 40 60
FEET

DIG ALERT
DIAL TOLL FREE 811
AT LEAST TWO DAYS BEFORE YOU DIG
UNDERGROUND SERVICE ALERT OF SOUTHERN CALIFORNIA

DATE	BY	MARK	REVISIONS	APPR.	DATE
ENGINEER				CITY	
DESIGNED BY:		DRAWN BY:	CHECKED BY:		

PREPARED BY:
ERSC INC.COM
Engineering Resources of Southern California
1861 West Redlands Blvd.
Redlands, CA 92373
P: 909.890.1255
JOHN M. BRUDIN DATE

SEAL
REGISTERED PROFESSIONAL ENGINEER JOHN M. BRUDIN No. 41836 CIVIL STATE OF CALIFORNIA

APPROVED BY: DATE:
CITY ENGINEER

CITY OF PERRIS ENGINEERING DEPARTMENT
24 S. D ST. SUITE 100
PERRIS CA 92570
951-956-2120

SCALE: AS SHOWN
DATE:
BENCHMARK: SEE ON SHEET 1

CITY OF PERRIS, CALIFORNIA
SOUTH PERRIS FIRE STATION
CIP F077
PRECISE GRADING PLAN
FOR: CITY OF PERRIS
W.O.

SHEET NO. C-5 OF 9 SHEETS
FILE NO.

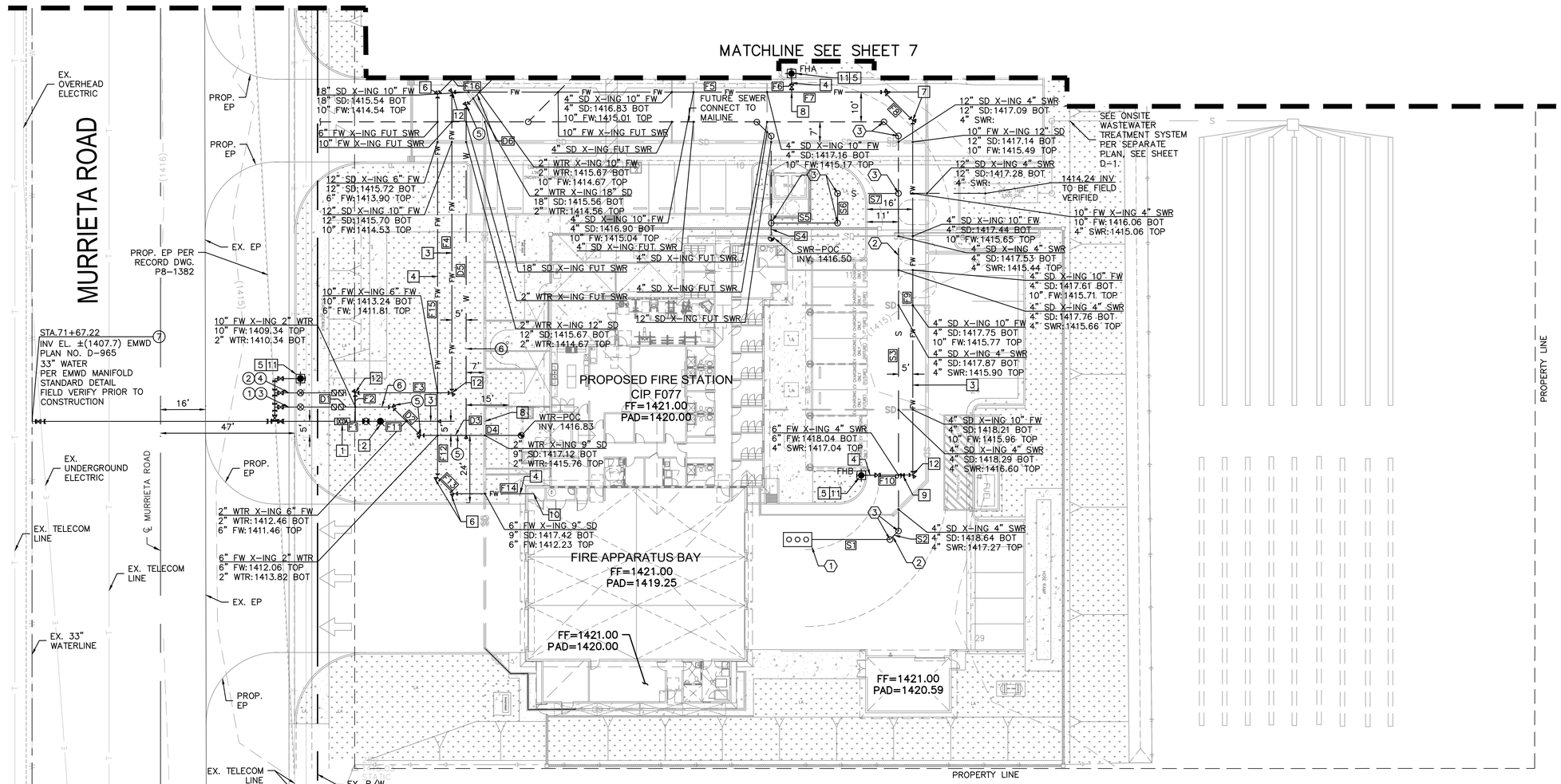

UTILITY PLAN NOTES

WATER CONSTRUCTION NOTES:

1. INSTALL 2-INCH WATER SERVICE CONNECTION AND METER PER EMWD STD DWG B-344A.
2. INSTALL 1-INCH WATER IRRIGATION SERVICE CONNECTION AND METER PER EMWD STD DWG B-590A.
3. INSTALL 2-INCH REDUCED PRESSURE BACKFLOW PREVENTER PER EMWD STD DWG B-597A.
4. INSTALL 1-INCH REDUCED PRESSURE BACKFLOW PREVENTER PER EMWD STD DWG B-597A.
5. INSTALL 2-INCH 45° ELBOW.
6. INSTALL 2-INCH PVC, SCHEDULE 40 OR APPROVED EQUAL.
7. CONNECT MANIFOLD PER EMWD MANIFOLD STANDARD DETAIL ON SHEET C-2.

SEWER CONSTRUCTION NOTES:

1. INSTALL GREASE INTERCEPTOR PER SEPTIC SYSTEM PLAN, SEE SHEET D-1.
2. INSTALL 4-INCH SCHEDULE 40 PVC OR APPROVED EQUAL.
3. INSTALL 4-INCH SEWER CLEANOUT PER SEPTIC SYSTEM PLAN, SEE SHEET D-1.

FIRE PROTECTION CONSTRUCTION NOTES:

1. INSTALL 10-INCH FIRE DOUBLE CHECK DETECTOR ASSEMBLY PER EMWD STD DWG B-657.
2. INSTALL POST INDICATOR AND FIRE DEPARTMENT CONNECTION VALVE PER DETAIL "H" ON SHEET C-2.
3. INSTALL 10-INCH PVC C900 OR APPROVED EQUAL.
4. INSTALL 6-INCH PVC C900 OR APPROVED EQUAL.
5. INSTALL 6-INCH DIA. FIRE HYDRANT PER EMWD STD DWG B-517.
6. INSTALL 6-INCH 45° ELBOW.
7. INSTALL 10-INCH 45° ELBOW.
8. INSTALL 10X6-INCH TEE.
9. INSTALL 10"X6" REDUCER.
10. CONNECT FIRE LINE PER DETAIL "J" ON SHEET C-6 AND C-7.
11. CONSTRUCT 3'X3 CONCRETE PAD PER EMWD STD DWG B-517.
12. INSTALL 10-INCH 90° ELBOW.
13. INSTALL 6-INCH 90° ELBOW.

LEGEND

- TAPPING SLEEVE
- DDCA — DOUBLE CHECK DETECTOR ASSEMBLY
- POST INDICATOR VALVE
- GATE VALVE
- FIRE HYDRANT
- BACKFLOW PREVENTER
- —FW— PROPOSED FIRELINE
- POINT OF CONNECTION
- CLEAN OUT
- F.D.C.
- WATER METER
- THRUST BLOCK
- REDUCER
- —W— PROPOSED WATERLINE
- —SD— PROPOSED STORM DRAIN
- FUTURE SEWER LATERAL

SCALE 1"=20'
0 20 40 60
FEET

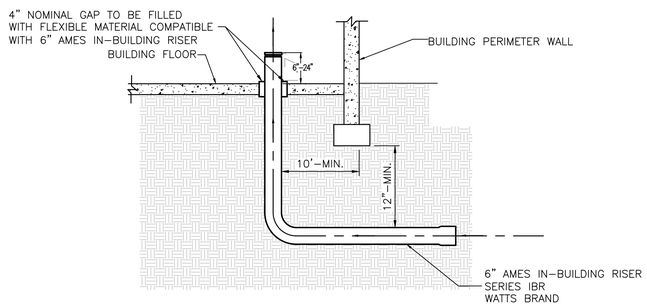

DETAIL "J" - IN-BUILDING RISER
N.T.S.

FIRE WATER LINE DATA		
LINE #	LENGTH	DIRECTION
F1	2.0'	S89° 59' 59.60"E
F2	10.0'	S0° 00' 11.01"W
F3	33.8'	S89° 33' 25.03"E
F4	105.4'	N0° 26' 29.32"E
F5	119.0'	S89° 33' 24.95"E
F6	6.5'	S0° 02' 00.53"W
F7	32.5'	S89° 33' 24.95"E
F8	14.1'	N44° 33' 24.83"W
F9	124.3'	N0° 26' 35.17"E
F10	18.0'	N89° 59' 48.26"W
F11	28.8'	S89° 32' 15.19"E
F12	19.7'	S0° 26' 13.18"W
F13	8.0'	S44° 33' 24.83"E
F14	27.9'	S89° 34' 01.71"E
F15	114.6'	N0° 26' 29.32"E
F16	8.2'	N45° 23' 23.14"E

SEWER LINE DATA		
LINE #	LENGTH	DIRECTION
S1	27.4'	N89° 33' 25.03"W
S2	4.2'	S45° 26' 35.05"W
S3	118.3'	S0° 26' 35.16"W
S4	4.2'	S0° 26' 21.71"W
S5	23.2'	S89° 33' 38.29"E
S6	10.4'	S0° 26' 35.23"W
S7	51.7'	N89° 33' 24.80"W

DOMESTIC WATER LINE DATA		
LINE #	LENGTH	DIRECTION
D1	32.1'	S89° 33' 25.03"E
D2	14.1'	S44° 33' 24.83"E
D3	16.0'	S89° 33' 22.29"E
D4	18.2'	S89° 33' 22.29"E
D5	115.6'	N0° 26' 29.32"E
D6	13.7'	N45° 26' 35.05"E

DIG ALERT
DIAL TOLL FREE 811
AT LEAST TWO DAYS BEFORE YOU DIG
UNDERGROUND SERVICE ALERT OF SOUTHERN CALIFORNIA

DATE	BY	MARK	REVISIONS	APPR.	DATE

ENGINEER
DESIGNED BY: DRAWN BY: CHECKED BY:

PREPARED BY:
ERSC inc.com
Engineering Resources of Southern California
1861 West Redlands Blvd.
Redlands, CA 92373
P: 909.890.1255
JOHN M. BRUDIN DATE

SEAL
REGISTERED PROFESSIONAL ENGINEER JOHN M. BRUDIN No. 41836 CIVIL STATE OF CALIFORNIA

APPROVED BY: DATE:
CITY ENGINEER

CITY OF PERRIS ENGINEERING DEPARTMENT
24 S. D ST. SUITE 100
PERRIS CA 92570
951-956-2120

SCALE: AS SHOWN
DATE:
BENCHMARK: SEE ON SHEET 1

CITY OF PERRIS, CALIFORNIA
SOUTH PERRIS FIRE STATION
CIP F077
UTILITY PLAN
FOR: CITY OF PERRIS
W.O.

SHEET NO. C-6
OF 9 SHEETS
FILE NO.

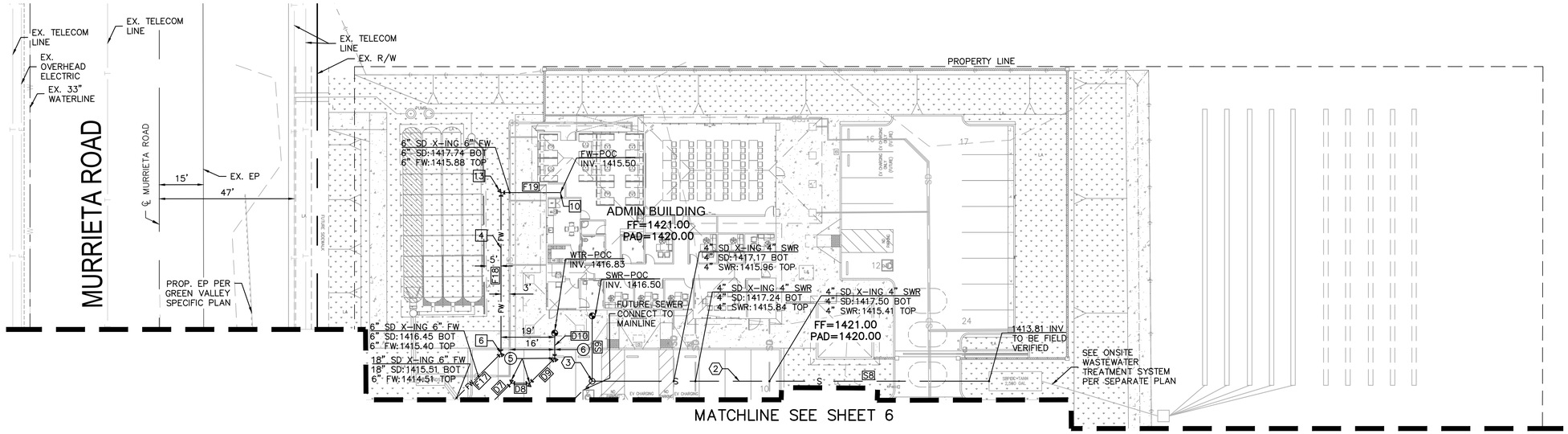

UTILITY PLAN NOTES

WATER CONSTRUCTION NOTES:

(5) INSTALL 2-INCH 45° ELBOW.

(6) INSTALL 2-INCH PVC, SCHEDULE 40 OR APPROVED EQUAL.

SEWER CONSTRUCTION NOTES:

⟨2⟩ INSTALL 4-INCH SCHEDULE 40 PVC OR APPROVED EQUAL.

⟨3⟩ INSTALL 4-INCH SEWER CLEANOUT PER SEPTIC SYSTEM PLAN, SEE SHEET D-1.

FIRE PROTECTION CONSTRUCTION NOTES:

[4] INSTALL 6-INCH PVC C900 OR APPROVED EQUAL.

[5] INSTALL 6-INCH DIA. FIRE HYDRANT PER EMWD STD DWG B-517.

[6] INSTALL 6-INCH 45° ELBOW.

[10] CONNECT FIRE LINE PER DETAIL "J" ON SHEET C-6 AND C-7.

[11] CONSTRUCT 3'X3 CONCRETE PAD PER EMWD STD DWG B-517.

[13] INSTALL 6-INCH 90° ELBOW.

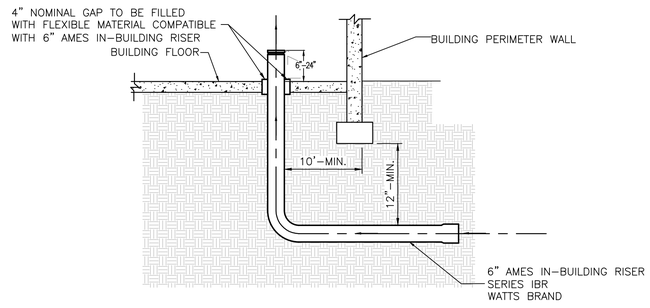

DETAIL "J" - IN-BUILDING RISER
N.T.S.

FIRE WATER LINE DATA		
LINE #	LENGTH	DIRECTION
F6	6.5'	S0° 02' 00.53"W
F17	22.9'	N45° 23' 23.14"E
F18	55.9'	N0° 26' 35.05"E
F19	20.7'	S89° 33' 24.95"E

SEWER LINE DATA		
LINE #	LENGTH	DIRECTION
S8	138.2'	N89° 33' 11.83"W
S9	23.8'	S0° 26' 48.17"W

DOMESTIC WATER LINE DATA		
LINE #	LENGTH	DIRECTION
D7	8.1'	N45° 26' 35.05"E
D8	6.5'	S89° 33' 24.95"E
D9	12.3'	N45° 26' 35.05"E
D10	8.7'	N0° 26' 35.05"E

LEGEND

- TAPPING SLEEVE
- DDCA — DOUBLE CHECK DETECTOR ASSEMBLY
- POST INDICATOR VALVE
- GATE VALVE
- FIRE HYDRANT
- BACKFLOW PREVENTER
- —FW— PROPOSED FIRELINE
- POINT OF CONNECTION
- CLEAN OUT
- F.D.C.
- WATER METER
- THRUST BLOCK
- —W— PROPOSED WATERLINE
- —SD— PROPOSED STORM DRAIN
- FUTURE SEWER LATERAL

SCALE 1"=20'
0 20 40 60
FEET

DIG ALERT
DIAL TOLL FREE 811
AT LEAST TWO DAYS BEFORE YOU DIG
UNDERGROUND SERVICE ALERT OF SOUTHERN CALIFORNIA

DATE	BY	MARK	REVISIONS	APPR.	DATE
ENGINEER				CITY	

DESIGNED BY: DRAWN BY: CHECKED BY:

PREPARED BY:
ERSC INC.COM
Engineering Resources of Southern California
1861 West Redlands Blvd.
Redlands, CA 92373
P: 909.890.1255
JOHN M. BRUDIN DATE

SEAL
REGISTERED PROFESSIONAL ENGINEER — JOHN M. BRUDIN — No. 41836 — CIVIL — STATE OF CALIFORNIA

APPROVED BY: DATE:
CITY ENGINEER

CITY OF PERRIS ENGINEERING DEPARTMENT
24 S. D ST. SUITE 100
PERRIS CA 92570
951-956-2120

SCALE: AS SHOWN
DATE:
BENCHMARK: SEE ON SHEET 1

CITY OF PERRIS, CALIFORNIA
SOUTH PERRIS FIRE STATION
CIP F077
UTILITY PLAN

FOR: CITY OF PERRIS W.O.

SHEET NO. C-7 OF 9 SHEETS
FILE NO.

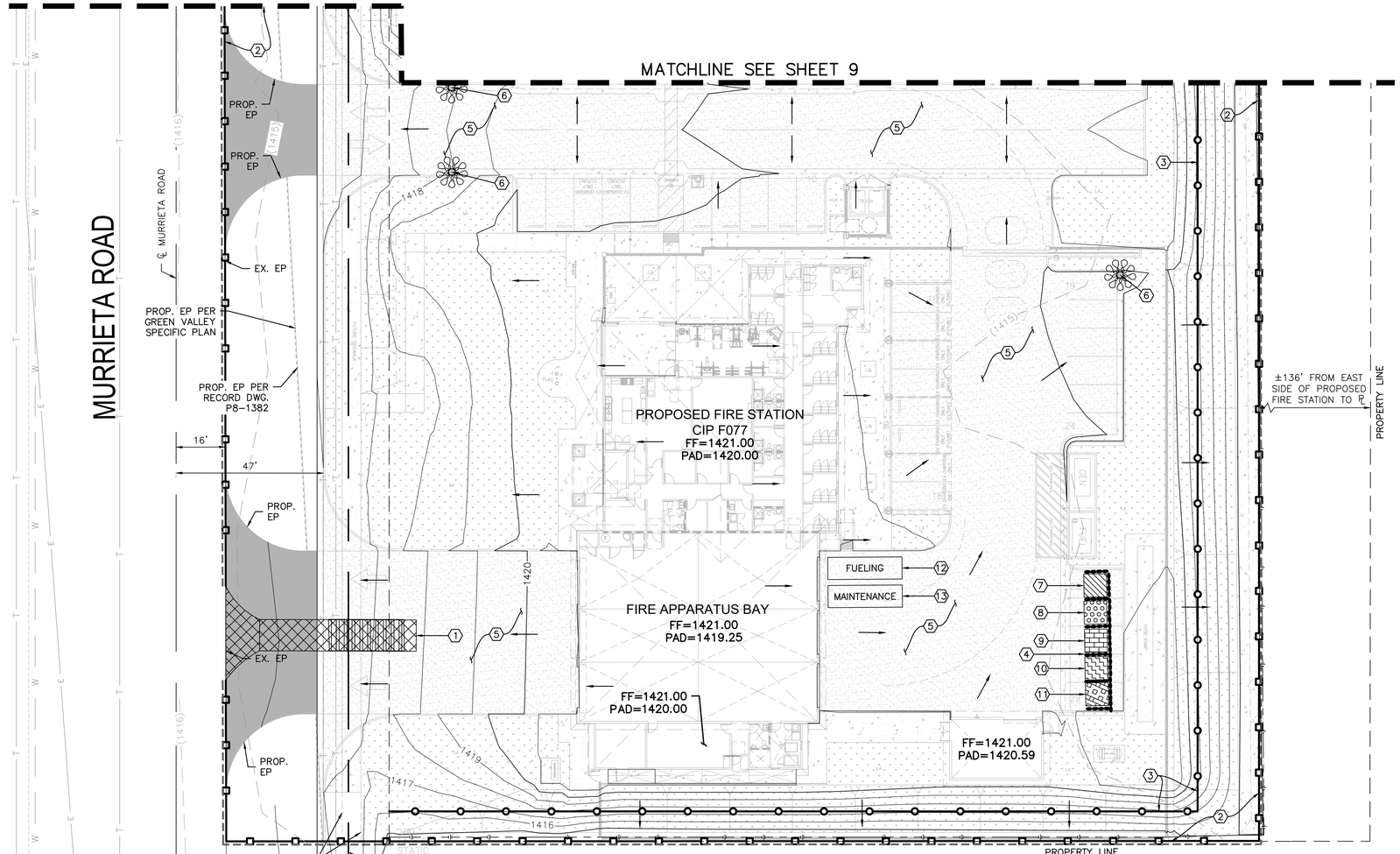

LEGEND

- STABILIZED CONSTRUCTION ENTRANCE
- MATERIAL DELIVERY/STORAGE AREA
- STOCKPILE MANAGEMENT
- SPILL PREVENTION AND CONTROL
- SOLID WASTE MANAGEMENT
- CONCRETE WASTE MANAGEMENT
- GRADING LIMITS
- GRAVEL BAGS
- SILT FENCE
- FIBER ROLLS
- FLOW PATH
- INLET PROTECTION

EROSION CONTROL NOTES

1. STABILIZED CONSTRUCTION ENTRANCE (TC-1)
2. SILT FENCE (SE-1)
3. FIBER ROLLS (SE-5)
4. GRAVEL BAG BERM (SE-6)
5. STREET SWEEPING AND VACUUMING (SE-7)
6. STORM DRAIN INLET PROTECTION (SE-10)
7. MATERIAL DELIVERY AND STORAGE (WM-1)
8. STOCKPILE MANAGEMENT (WM-3)
9. SPILL PREVENTION AND CONTROL (WM-4)
10. SOLID WASTE MANAGEMENT (WM-5)
11. CONCRETE WASTE MANAGEMENT (WM-8)
12. VEHICLE AND EQUIPMENT FUELING (NS-9)
13. VEHICLE AND EQUIPMENT MAINTENANCE (NS-10)

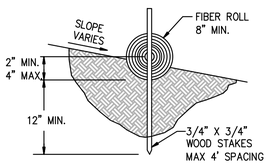

ENTRENCHMENT DETAIL
NOT TO SCALE

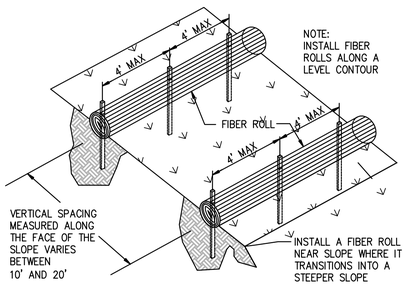

TYPICAL FIBER ROLL INSTALLATION
NOT TO SCALE

3 FIBER ROLL
N.T.S.

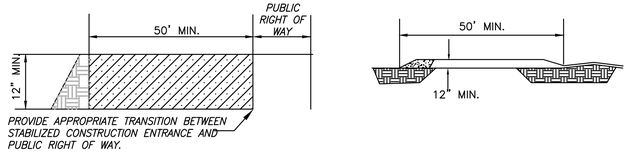

1 STABILIZED CONSTRUCTION ENTRANCE
N.T.S.

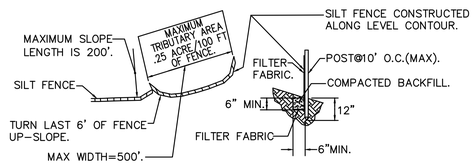

2 SILT FENCE
N.T.S.

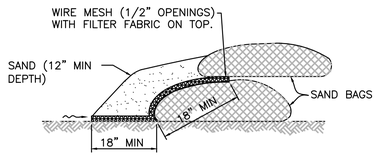

4 GRAVEL BAG BARRIERS
N.T.S.

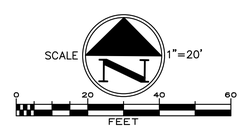

DIG ALERT
DIAL TOLL FREE 811
AT LEAST TWO DAYS BEFORE YOU DIG
UNDERGROUND SERVICE ALERT OF SOUTHERN CALIFORNIA

DATE	BY	MARK	REVISIONS	APPR.	DATE

ENGINEER | CITY
DESIGNED BY: | DRAWN BY: | CHECKED BY:

PREPARED BY:
ERSC INC.COM
Engineering Resources of Southern California
1861 West Redlands Blvd.
Redlands, CA 92373
P: 909.890.1255
JOHN M. BRUDIN DATE

SEAL
REGISTERED PROFESSIONAL ENGINEER JOHN M. BRUDIN No. 41836 CIVIL STATE OF CALIFORNIA

APPROVED BY: DATE:
CITY ENGINEER

CITY OF PERRIS
ENGINEERING DEPARTMENT
24 S. D ST. SUITE 100
PERRIS CA 92570
951-956-2120

SCALE: AS SHOWN
DATE:
BENCHMARK: SEE ON SHEET 1

CITY OF PERRIS, CALIFORNIA
SOUTH PERRIS FIRE STATION
CIP F077
EROSION CONTROL PLAN
FOR: CITY OF PERRIS
W.O.

SHEET NO. C-8 OF 9 SHEETS
FILE NO.

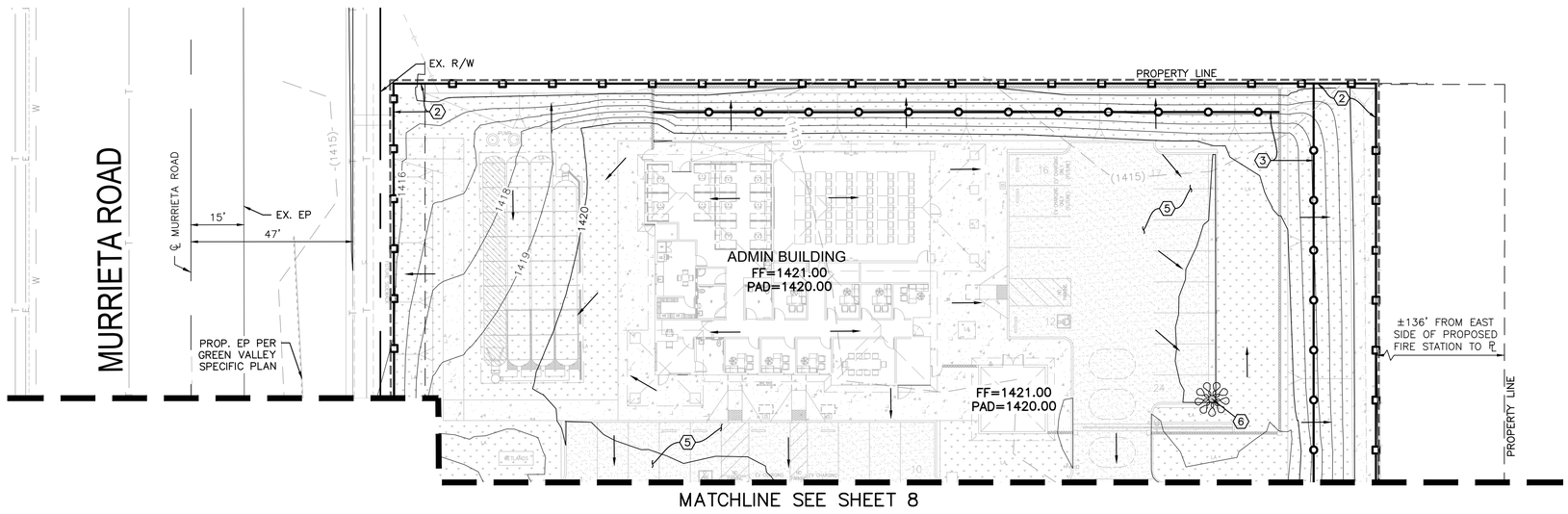

LEGEND

- STABILIZED CONSTRUCTION ENTRANCE
- MATERIAL DELIVERY/STORAGE AREA
- STOCKPILE MANAGEMENT
- SPILL PREVENTION AND CONTROL
- SOLID WASTE MANAGEMENT
- CONCRETE WASTE MANAGEMENT
- GRADING LIMITS
- GRAVEL BAGS
- SILT FENCE
- FIBER ROLLS
- FLOW PATH
- INLET PROTECTION

EROSION CONTROL NOTES

1. STABILIZED CONSTRUCTION ENTRANCE (TC-1)
2. SILT FENCE (SE-1)
3. FIBER ROLLS (SE-5)
4. GRAVEL BAG BERM (SE-6)
5. STREET SWEEPING AND VACUUMING (SE-7)
6. STORM DRAIN INLET PROTECTION (SE-10)
7. MATERIAL DELIVERY AND STORAGE (WM-1)
8. STOCKPILE MANAGEMENT (WM-3)
9. SPILL PREVENTION AND CONTROL (WM-4)
10. SOLID WASTE MANAGEMENT (WM-5)
11. CONCRETE WASTE MANAGEMENT (WM-8)
12. VEHICLE AND EQUIPMENT FUELING (NS-9)
13. VEHICLE AND EQUIPMENT MAINTENANCE (NS-10)

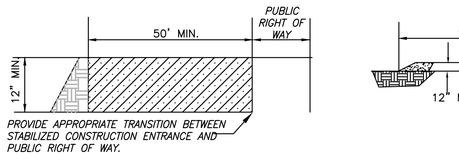

1 STABILIZED CONSTRUCTION ENTRANCE
N.T.S.

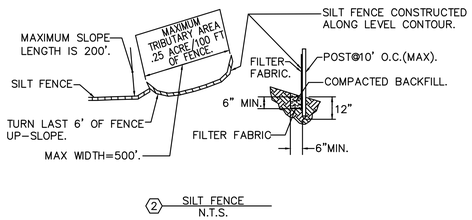

2 SILT FENCE
N.T.S.

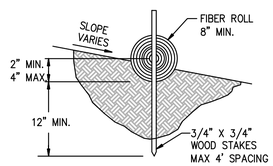

ENTRENCHMENT DETAIL
NOT TO SCALE

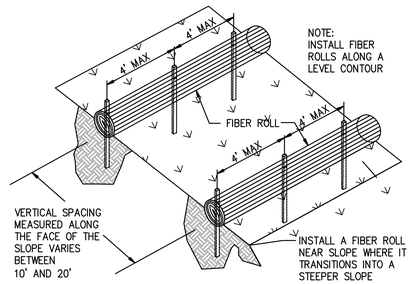

TYPICAL FIBER ROLL INSTALLATION
NOT TO SCALE

3 FIBER ROLL
N.T.S.

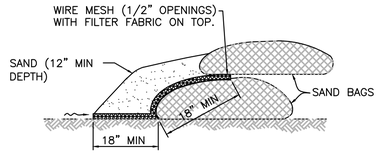

5 SAND BAG BARRIERS
N.T.S.

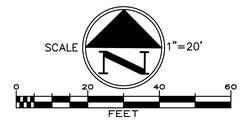

DIG ALERT
DIAL TOLL FREE 811
AT LEAST TWO DAYS BEFORE YOU DIG
UNDERGROUND SERVICE ALERT OF SOUTHERN CALIFORNIA

DATE	BY	MARK	REVISIONS	APPR.	DATE
ENGINEER				CITY	

DESIGNED BY: DRAWN BY: CHECKED BY:

PREPARED BY:
ERSC INC.COM
Engineering Resources of Southern California
1861 West Redlands Blvd.
Redlands, CA 92373
P: 909.890.1255
JOHN M. BRUDIN DATE

SEAL
REGISTERED PROFESSIONAL ENGINEER
JOHN M. BRUDIN
No. 41836
CIVIL
STATE OF CALIFORNIA

APPROVED BY: DATE:
CITY ENGINEER

CITY OF PERRIS ENGINEERING DEPARTMENT
24 S. D ST. SUITE 100
PERRIS CA 92570
951-956-2120

SCALE: AS SHOWN
DATE:
BENCHMARK: SEE ON SHEET 1

CITY OF PERRIS, CALIFORNIA
SOUTH PERRIS FIRE STATION
CIP F077
EROSION CONTROL PLAN

FOR: CITY OF PERRIS W.O.

SHEET NO. C-9 OF 9 SHEETS
FILE NO.

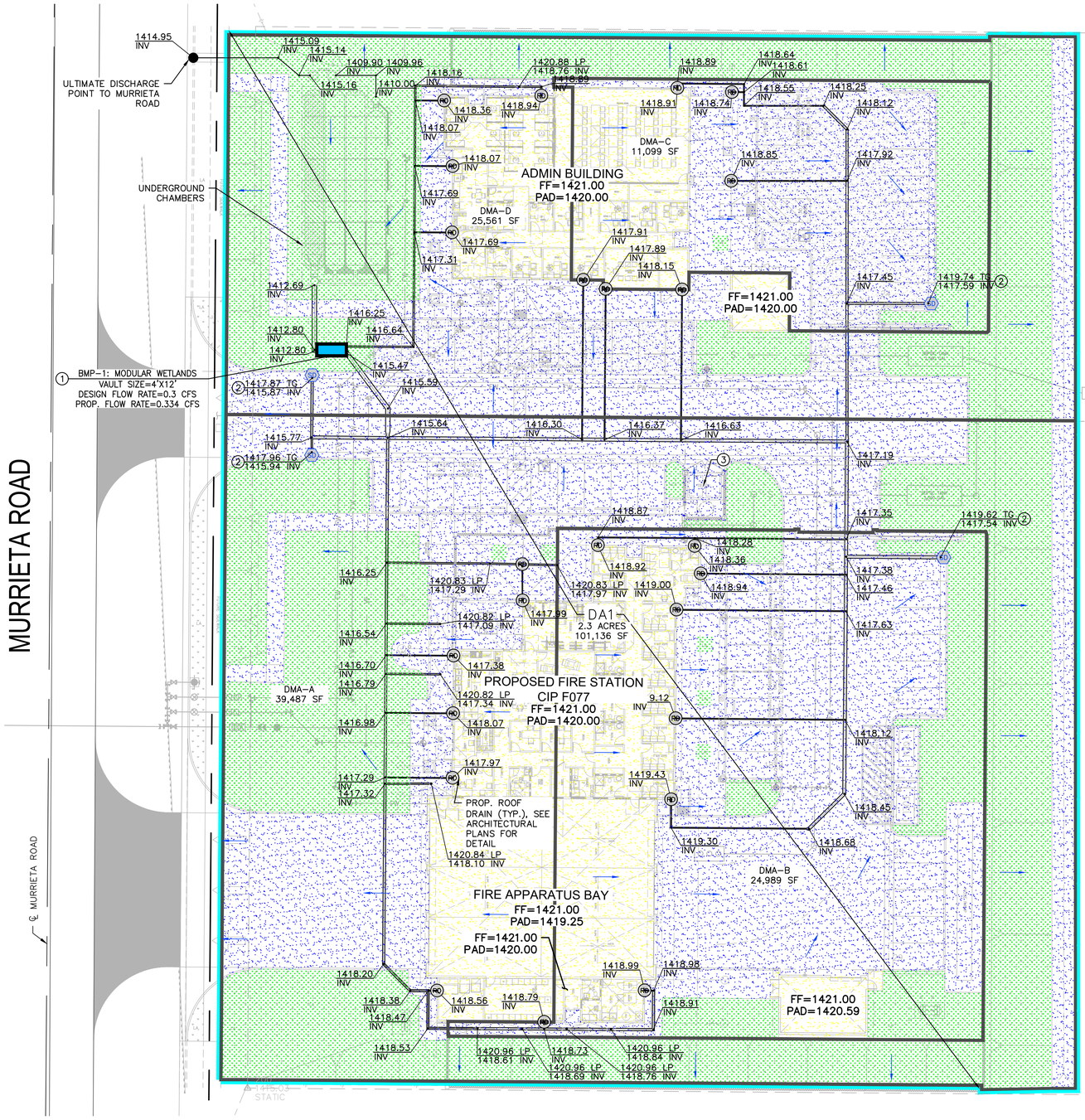

DA ID	AREA (ACRES)	EXISTING IMPERVIOUS AREA	PROPOSED IMPERVIOUS AREA	DESIGN FLOW RATE	PROPOSED FLOW RATE	BMP (SIZE AND TYPE)
DA1	2.3	0%	0.64	0.3 CFS	0.334 CFS	BMP-1: MODULAR WETLANDS

LEGEND

DA1	DRAINAGE AREA (DA)
DMA-A	DRAINAGE MANAGEMENT AREA (DMA)
1.00 ACRES	NET AREA IN ACRES
	DIRECTION OF SURFACE FLOW
	DRAINAGE AREA
	DMA BOUNDARY
SD	PROPOSED STORM DRAIN INLET/OUTLET
RD	PROPOSED ROOF DRAIN LOCATION (SEE ARCHITECTURAL PLANS)
	DISCHARGE LOCATION

HATCH LEGEND

	PROPOSED PERVIOUS AREA (LANDSCAPE)
	PROPOSED IMPERVIOUS AREA
	PROPOSED MODULAR WETLANDS (BMP)

STRUCTURAL BMP NOTES

1. TREATMENT CONTROL BMP – MODULAR WETLANDS (SEE DETAIL BELOW).
2. STORM DRAIN SYSTEM STENCILING/SIGNAGE PER DETAIL "A".
3. COVERED TRASH ENCLOSURE, SEE SHEET A1.2 ON ARCHITECTURAL PLANS FOR DETAIL.

4"

NO DUMPING
DRAINS TO RIVER

DETAIL "A" - STORM DRAIN SIGNAGE
N.T.S.

THE ECOSTREAM BIOFILTER™ IS A BIOFILTRATION STORMWATER TREATMENT TECHONOLOGY THAT RELIES ON PHYSICAL, CHEMICAL AND BIOLOGICAL MECHANISMS TO REMOVE TOTAL SUSPENDED SOLIDS, TOTAL PHOSPHORUS, TOTAL NITROGEN, HEAVY METALS, OIL AND GREASE, TRASH AND BACTERIA.

Model	Vault Size (ft)	Media Filtration Area (sf)	Min Inlet to Outlet Depth* (in)	Overflow to Outlet Depth* (in)	Design Treatment Rate (cfs)	Bypass Handicap (in)	Solid Lid Size & Number
ES16B	4 x 4	16	32	32	0.147	6	36 in (1x)
ES24B	4 x 6	24	32	32	0.221	6	36 in (1x)
ES32B	4 x 8	32	32	32	0.294	6	36 in (1x)
ES40B	4 x 10	40	32	32	0.368	6	36 in (1x)
ES48B	4 x 12	48	32	32	0.441	6	36 in (1x)
ES48B	6 x 8	48	32	32	0.441	6	36 in (1x)
ES60B	6 x 10	60	32	32	0.551	8	36 in (1x)
ES72B	6 x 12	72	32	32	0.662	8	36 in (1x)
ES80B	8 x 10	80	32	32	0.735	8	36 in (1x)
ES96B	8 x 12	96	32	32	0.882	10	36 in (1x)
ES112B	8 x 14	112	32	32	1.029	10	36 in (2x)
ES128B	8 x 16	128	32	32	1.176	10	36 in (2x)

*A min drop of 24" can be used however the design engineer must review the 1" tailwater face to the bioflow bypass) on the inlet pipe to ensure it does not affect the project's overall design.

NOTES:
- UNDERDRAIN SHOWN IS SCHEMATIC ONLY. FOR DETAILS ON UNDERDRAIN SIZING AND LAYOUT SEE ECOSTREAM INSTALLATION GUIDE FOR DETAILS, KIT NUMBER AND PLACEMENT OPTIONS.

ADS ECOSTREAM SPECIFICATIONS

PRODUCTS
A. INTERNAL COMPONENTS: SHALL BE SUBSTANTIALLY CONSTRUCTED OF RECYCLED POLYETHYLENE OR OTHER THERMOPLASTIC MATERIAL APPROVED BY THE MANUFACTURER.
B. FILTER MEDIA: FILTER MEDIA SHALL BE BY ADS AND SHALL CONSIST OF A PROPRIETARY BLEND OF FILTER MEDIA.
C. PRECAST CONCRETE VAULT: DESIGNED FOR H-20 TRAFFIC LOADING AND APPLICABLE SOIL LOADS OR AS OTHERWISE DETERMINED BY A LICENSED PROFESSIONAL ENGINEER. THE MATERIALS AND STRUCTURAL DESIGN OF THE DEVICES SHALL BE PER ASTM C478, ASTM C857 AND ASTM C858.

PERFORMANCE
A. THE STORMWATER FILTER SYSTEM SHALL BE AN ONLINE OR OFFLINE DESIGN BASED ON LOCAL REQUIREMENTS CAPABLE OF TREATING 100% OF THE REQUIRED TREATMENT FLOW AT FULL SEGMENT SURCHARGE.
B. THE STORMWATER FILTER SYSTEM SHALL HAVE NO MOVING PARTS.
C. THE STORMWATER TREATMENT UNIT SHALL BE DESIGNED TO REMOVE AT LEAST 80% OF SUSPENDED SOLIDS.

ECOSTREAM INSTALLATION NOTES

INSTALLATION OF THE STORMWATER TREATMENT UNIT(S) SHALL BE PERFORMED PER MANUFACTURER'S INSTALLATION INSTRUCTIONS. SUCH INSTRUCTIONS CAN BE OBTAINED BY CALLING ADVANCED DRAINAGE SYSTEMS AT (800) 821-6710 OR BY LOGGING ON TO WWW.ADSPIPE.COM.

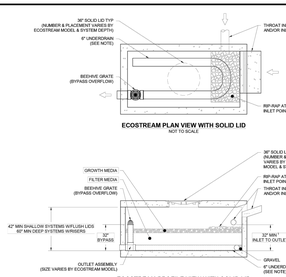

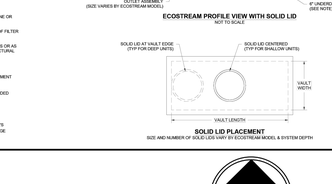

ECOSTREAM BIOFILTER SOLID LID INSTALLATION

DATE	BY	DESCRIPTION
07/15/25	DRAFTER	CHECKED
07/15/25	JAM	JAM

EcoStream™ Biofilter
Stormwater Media Filtration

ADS
ADVANCED DRAINAGE SYSTEMS, INC.

SHEET 1 OF 1

SCALE 1"=20'
0 20 40 60
FEET

POST CONSTRUCTION BMP SITE PLAN

DIG ALERT
DIAL TOLL FREE 811
AT LEAST TWO DAYS BEFORE YOU DIG
UNDERGROUND SERVICE ALERT OF SOUTHERN CALIFORNIA

DATE	BY	MARK	REVISIONS	APPR.	DATE

ENGINEER | CITY
DESIGNED BY: | DRAWN BY: | CHECKED BY:

PREPARED BY:
ERSC inc.com
Engineering Resources of Southern California
1861 West Redlands Blvd.
Redlands, CA 92373
P: 909.890.1255
JOHN M. BRUDIN DATE

SEAL
REGISTERED PROFESSIONAL ENGINEER JOHN M. BRUDIN No. 41836 CIVIL STATE OF CALIFORNIA

APPROVED BY: DATE:
CITY ENGINEER

CITY OF PERRIS ENGINEERING DEPARTMENT
24 S. D ST. SUITE 100
PERRIS CA 92570
951-956-2120

SCALE: AS SHOWN
DATE:
BENCHMARK: SEE ON SHEET 1

CITY OF PERRIS, CALIFORNIA
SOUTH PERRIS FIRE STATION
CIP F077
WQMP MAP
FOR: CITY OF PERRIS
W.O.

SHEET NO. 1 OF 1 SHEETS
FILE NO.

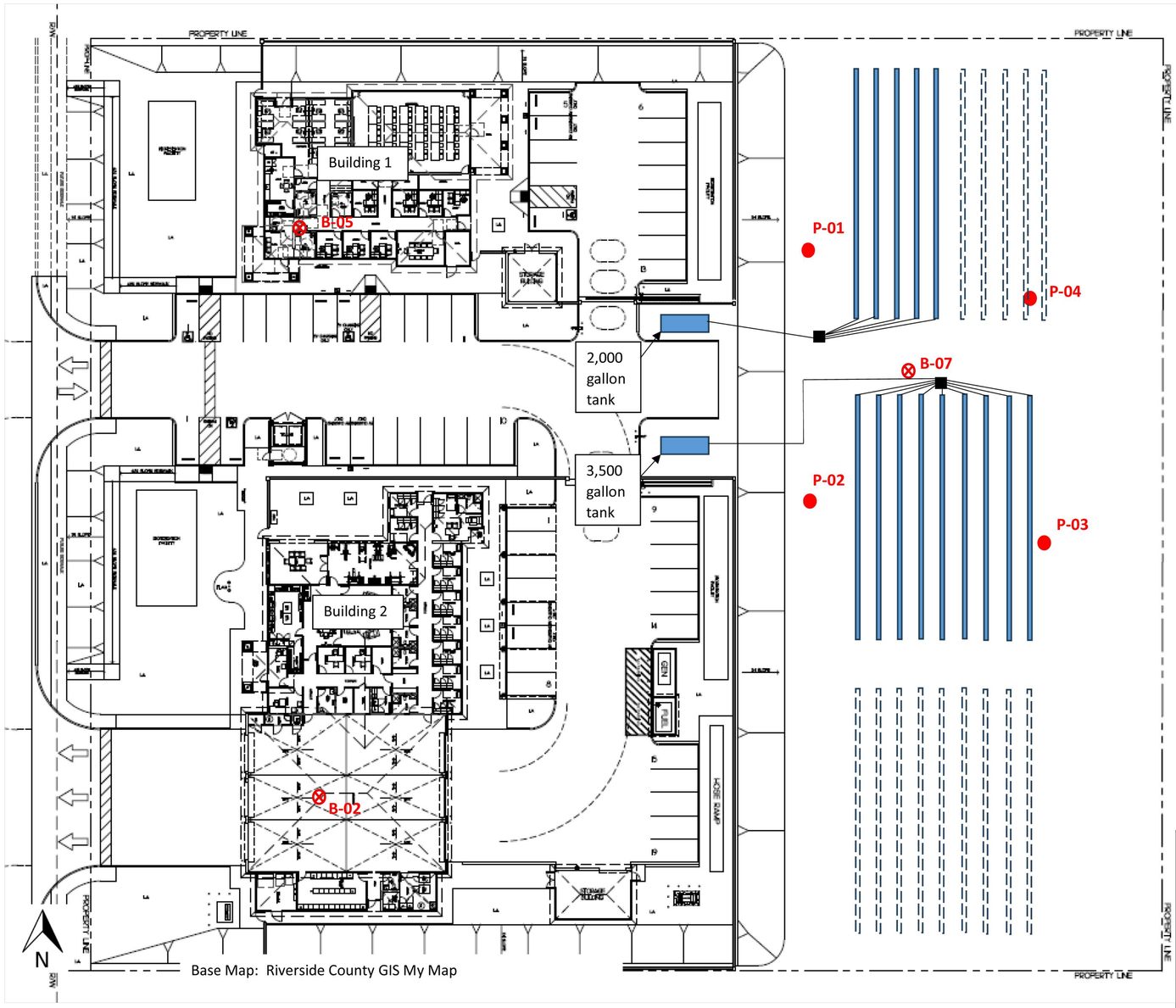

SITE PLAN

South Perris Fire Station

Murrieta Road

Perris, California

● Approximate Location of Percolation Test

⊗ Approximate Boring Location

IFE Inland Foundation Engineering, Inc.

1310 S. Santa Fe Avenue, San Jacinto, CA 92583 | (951) 654-1555

Figure No. 1	STK Architecture, Inc. South Perris Fire Station Murrieta Road, Perris, CA	
	Drawn By: SD	Project No. S168-196
	Scale 1" = 40'	Date: September 2025

NOTES:

THE DRAWING & NOTES SHOWN ON THIS SHEET IS FOR REFERENCE ONLY. SEE APPENDIX "B" FOR THE ONSITE WASTEWATER TREATMENT SYSTEM REPORT

STK ARCHITECTURE, INC.

42095 ZEVO DR., TEMECULA, CALIFORNIA 92590-3780
Phone: 951.296.9110 Fax: 951.296.6079 Email: stk@stkinc.com

CONSULTANT:

REVIEWED FOR CODE COMPLIANCE

THESE PLANS AND DOCUMENTS HAVE BEEN REVIEWED AND FOUND TO BE IN COMPLIANCE WITH THE APPLICABLE CODE REQUIREMENTS OF THE APPROVAL BY OTHER DEPARTMENTS AND ANY NOTED CONDITIONS. THE APPROVAL OF ANY VIOLATION OF APPLICABLE CODES AND STANDARDS, NOR RELIEVE THE OWNER, DESIGN PROFESSIONAL OF RECORD, OR CONTRACTOR OF COMPLIANCE WITH THE APPLICABLE CODES AND STANDARDS. PLAN REVIEW OF DOCUMENTS DOES NOT AUTHORIZE CONSTRUCTION TO PROCEED IN VIOLATION OF ANY FEDERAL, STATE OR LOCAL REGULATION.

BUILDING BUREAU SOLUTIONS, INC.
REVIEWED BY: STEVEN M. PE, CBSE

THIS SET OF THE PLANS AND SPECIFICATIONS MUST BE KEPT ON THE JOB SITE AT ALL TIMES AND IT IS UNLAWFUL TO MAKE ANY CHANGES OR ALTERATIONS WITHOUT PERMISSION FROM THE CITY ODOR AND THE STRUCTURE(S) IS NOT PERMITTED UNTIL FINAL APPROVAL IS OBTAINED BY ALL APPLICABLE DEPARTMENTS.

BUILDING BUREAU SOLUTIONS INC.

PROJECT ADMINISTERED BY:
CITY OF PERRIS

101 NORTH "D" STREET
PERRIS, CA 92570

PROJECT NAME:
FIRE STATION 105 AND ADMINISTRATION BUILDING

PROJECT CIP: F077

2495 MURRIETA ROAD
PERRIS, CA 92585

ISSUE INFORMATION:

DATE:	INFORMATION:
11-26-25	95% CD SUBMITTAL
02-05-26	1st PC RESPONSE
02-19-26	2nd PC RESPONSE

SHEET INFORMATION:

STK PROJECT NO.: 365-03-25
SCALE: AS NOTED
DATE: NOVEMBER 2025
PLOT DATE: –
DRAWN BY: JN

SEAL:

LICENSED ARCHITECT ANTONIO FINALDI No. C31476 REN. 07-31-27 STATE OF CALIFORNIA

SHEET TITLE:
ON-SITE WASTEWATER TREATMENT

SHEET NO.:
D-1

LANDSCAPE DEVELOPMENT PLANS FOR:

TR. 24648
CITY OF PERRIS
SOUTH FIRE STATION AND ADMIN. BUILDING
APN: 327-210-016

EMWD STANDARD RECYCLED WATER IRRIGATION PLAN NOTES

1. THE RECYCLED WATER IRRIGATION SYSTEM SHOWN ON THESE PLANS SHALL BE CONSTRUCTED IN ACCORDANCE WITH THE MOST RECENT EDITION OF THE EMWD RECYCLED WATER IRRIGATION GUIDELINES, AND EMWD STANDARDS AND SPECIFICATIONS FOR DEVELOPER'S PROJECTS.
2. THE USE OF RECYCLED WATER SHALL ADHERE TO CDPH TITLE 22, DIVISION 4, CHAPTER 3 OF THE CALIFORNIA CODE OF REGULATIONS AND THE CURRENT RULES, ORDINANCES, REGULATIONS OF EMWD.
3. EMWD REQUIRES THAT A PRE-CONSTRUCTION CONFERENCE BE SCHEDULED PRIOR TO ANY CONSTRUCTION BY CALLING THE EMWD FIELD ENGINEERING DEPARTMENT AT (951) 928-3777, EXTENSION 4830.
4. THE EASTERN MUNICIPAL WATER DISTRICT OPERATION DEPARTMENT SHALL BE NOTIFIED TWO WORKING DAYS PRIOR TO THE START OF CONSTRUCTION AT (951) 679-3222. ALL WORK PERFORMED WITHOUT BENEFIT OF INSPECTION SHALL BE SUBJECT TO REJECTION AND REMOVAL.
5. WHEN POTABLE WATER IS ONSITE, THE CDPH TITLE 22 REQUIRES A CROSS CONNECTION SHUTDOWN TEST TO PRECEDE THE FINAL RELEASE OF THE IRRIGATION SYSTEM. THIS TEST WILL BE CONDUCTED BY EMWD.
6. THE RECYCLED WATER IRRIGATION PLAN IS CONSIDERED A COMPONENT OF THE RECYCLE WATER IRRIGATION GUIDELINES.
7. EMWD'S REVIEW, ACCEPTANCE AND APPROVAL OF THE RECYCLED WATER IRRIGATION PLAN AND ASSOCIATED DOCUMENTS ARE FOR THE PURPOSES OF DOCUMENTATION OF THE PROJECT SITE AREA AND PROJECT SITE PHASING, POTABLE AND RECYCLED FACILITIES, IRRIGATED AREAS, IRRIGATION SYSTEM COMPONENTS, DATA ACQUISITION OF THE IRRIGATION SYSTEM DEMANDS, AND COMPLIANCE WITH CALIFORNIA DEPARTMENT OF PUBLIC HEALTH (CDPH) TITLE 22, GOVERNING AGENCY(S) CONDITIONS AND EMWD RECYCLED WATER IRRIGATION GUIDELINES.
8. THIS PROJECT SITE IS CONDITIONED FOR THE MANDATORY USE OF RECYCLED WATER FOR LANDSCAPE IRRIGATION PURPOSES AND AS A RESULT THE PROPERTY OWNER IS RESPONSIBLE FOR ENSURING COMPLIANCE WITH THESE REQUIREMENTS FROM ALL TENANTS, LEASE HOLDERS, PROPERTY ASSOCIATIONS, OR ANY AND ALL OTHERS WITH ACCESS TO, OR USE OF THE PROJECT SITE.
9. THE TIME LIMIT ON DRAWING ACCEPTANCE SHALL BE AS INDICATED IN THE EMWD RECYCLED WATER IRRIGATION GUIDELINES AND AS INDICATED IN THE PROJECT CONDITIONS OF APPROVAL. PLAN EXPIRATIONS REQUIRE THE RWIP TO BE RESUBMITTED TO EMWD.
10. THE RECYCLED WATER IRRIGATION PLAN IS A "LIVING" DOCUMENT OF RECORD THAT SHALL BE UPDATED IF THE PROJECT CONDITIONS, THE SITE PLAN, FACILITIES, IRRIGATED AREA, IRRIGATION DEMAND, OR DATA RELATIVE TO THE SITE CHANGES ONCE IT VARIES FROM THE ACCEPTED PLAN. DELTA REVISIONS OF THE PLAN SHALL BE AS DEEMED NECESSARY BY EMWD TO MAINTAIN ACCURATE DOCUMENT RECORDS OF THE PROJECT SITE AND LANDSCAPE IRRIGATION INSTALLATION.
11. ANY PROPOSED CHANGES TO A SYSTEM DURING CONSTRUCTION MUST BE SUBMITTED TO EMWD FOR AUTHORIZATION OF THE CHANGES PRIOR TO THE CHANGE BEING MADE IN THE FIELD.
12. UPON FINAL ACCEPTANCE OF AN IRRIGATION SYSTEM ANY FUTURE MODIFICATIONS MUST BE APPROVED THROUGH EMWD PRIOR TO THE START OF CONSTRUCTION.
13. ALL PUBLIC AND PRIVATE POTABLE WATER MAINS INCLUDING FIRE MAINS, ANY WATER WELLS AND/OR WATER COURSES WITHIN THE RECYCLED WATER PROJECT SHALL BE SHOWN ON THE PLANS.
14. DURING CONSTRUCTION, ALL RECYCLED IRRIGATION SYSTEMS SHALL BE CONNECTED TO A TEMPORARY POTABLE WATER SOURCE AT A T-METER CONNECTION TO A PUBLIC FIRE HYDRANT AS APPROVED BY EMWD. THIS CONNECTION WILL SERVE THE IRRIGATION SYSTEM WITH POTABLE WATER UNTIL THE METER IS RELEASED AT PROJECT APPROVAL. ALL TEMPORARY POTABLE CONNECTIONS FOR CONSTRUCTION OR IRRIGATION MUST BE HI-LINED THROUGH A T-METER AND AN ABOVE GROUND REDUCED PRESSURE (RP) PRINCIPAL BACKFLOW DEVICE WITHIN 3 FEET OF METER. NO PURPLE COLORED PIPING OR APPURTENANCES SHALL BE CONNECTED TO ANY POTABLE WATER SOURCE.
15. REDUCED PRESSURE (RP) PRINCIPAL BACKFLOW DEVICES MUST BE APPROVED AND TESTED BY AN EMWD APPROVED BACKFLOW TESTER (A LIST OF APPROVED TESTERS ARE AVAILABLE UPON REQUEST).
16. CROSS CONNECTIONS BETWEEN RECYCLED WATER LINES AND POTABLE WATER LINES ARE STRICTLY PROHIBITED. FINES MAY BE LEVIED.
17. INTERCONNECTION OF IRRIGATION PRESSURE SUPPLY MAINLINES ORIGINATING FROM MORE THAN ONE METER IS STRICTLY PROHIBITED.
18. NO PONDING, RUNOFF OR OVERSPRAY IS PERMITTED. ADJUST ALL SPRINKLER HEADS TO MINIMIZE OVERSPRAY ONTO SIDEWALKS, STREETS, DRINKING FOUNTAINS, DECORATIVE FOUNTAINS, COMFORT STATIONS, PLAYGROUND EQUIPMENT, PICNIC TABLES, BBQ, PRIVATE LOTS, POTABLE WATER AREAS AND EQUIPMENT, FOOD PREPARATION, OUTDOOR EATING AREAS, OR NON-DESIGNATED USE AREAS MUST NOT BE SUBJECTED TO RECYCLED WATER OVERSPRAY, WINDBLOWN SPRAY, RUNOFF, PONDING, OR UNAUTHORIZED USE. LACK OF PREVENTION, WHETHER BY DESIGN, CONSTRUCTION PRACTICE, OR SYSTEM OPERATION, IS STRICTLY PROHIBITED.
19. HOSE BIBS ARE STRICTLY PROHIBITED ON RECYCLED WATER SYSTEMS. POTABLE QUICK COUPLERS ARE NOT ALLOWED WITHIN THE RECYCLED WATER IRRIGATED AREA.
20. QUICK COUPLING VALVES SHALL BE OF A TYPE APPROVED FOR RECYCLED WATER USE WITH BRASS CONSTRUCTION, A SPECIAL QUICK COUPLER KEY WITH AN ACME THREAD FOR OPENING AND CLOSING THE VALVE. QUICK COUPLER VALVES CANNOT BE LOCATED WITHIN 50 FEET OF FOOD PREPARATION, OUTDOOR EATING AREAS, OR DESIGNATED CHILDREN PLAY EQUIPMENT OR WITHIN THE FENCED PERIMETER SURROUNDING SWIMMING POOLS.
21. ALL ON-SITE RECYCLED WATER PIPING INSTALLED ON THIS PROJECT SHALL BE PURPLE IN COLOR, PANTONE 522C AND IDENTIFIED IN ACCORDANCE WITH THE CURRENT CDPH GUIDELINES AND EASTERN MUNICIPAL WATER DISTRICTS STANDARDS AND SPECIFICATIONS.
22. WARNING TAPE FOR THE RECYCLED WATER PIPING SHALL BE PURPLE IN COLOR, PANTONE 522C, WITH THE WORDS "CAUTION: RECYCLED WATER" IMPRINTED IN MINIMUM 1 INCH HIGH LETTERS. IMPRINTING SHALL BE CONTINUOUS AND PERMANENT. THE WARNING TAPE SHALL BE INSTALLED CONTINUOUSLY ABOVE THE RECYCLED WATER IRRIGATION MAINLINE.
23. WARNING SIGNS AND LABELS SHALL READ "CAUTION: RECYCLED WATER DO NOT DRINK" AND INCLUDE THE INTERNATIONAL SYMBOL FOR DO NOT DRINK. THE LOCATION FOR WARNING SIGNS SHALL BE AS CALLED OUT ON THE PLANS AND AT BOTH SIDES OF ALL DRIVEWAY AND WALKWAY ENTRANCES, AT RECYCLED WATER METERS AND POSTED EVERY 500' ALONG THE RECYCLED WATER USE SITE PERIMETER. FINAL FIELD LOCATIONS SHALL BE AS DIRECTED BY THE DISTRICT REPRESENTATIVE.
24. EACH AUTOMATIC CONTROLLER AND ITS ASSOCIATED EQUIPMENT SHALL BE IDENTIFIED WITH A SIGN BEARING THE WORDS "CAUTION: RECYCLED WATER DO NOT DRINK", WITH LETTERS AT LEAST 1 INCH HIGH ON A PURPLE BACKGROUND AND WITH A "DO NOT DRINK" SYMBOL SIGN. THE SIGNS SHALL BE PLACED AS TO BE READILY SEEN BY ANY OPERATIONS PERSONNEL UTILIZING THE EQUIPMENT.
25. SIGNS OR DECALS WITH "RECYCLED WATER, DO NOT DRINK" AND THE DO NOT DRINK SYMBOL MUST BE POSTED ON PUMP CABINETS, AND ALL ENCLOSURES.
26. RECYCLED WATER SPRINKLERS / SPRAY HEADS MUST HAVE PURPLE CAPS, PURPLE COLLARS, AND THE RISERS HAVE A RECYCLED WATER DECAL. LARGE THROW HEADS MUST HAVE PURPLE INSERTS. PURPLE CAPS AND COLLARS MUST BE FIRMLY AFFIXED TO SPRINKLER HEADS. ALL OTHER ABOVE GROUND EQUIPMENTS MUST BE COLORED PURPLE OR HAVE A "RECYCLED WATER, DO NOT DRINK" DECAL OR SIGN.
27. ALL AUTOMATIC CONTROLLERS MUST BE SET TO OPERATE BETWEEN THE HOURS OF 9:00 P.M. AND 6:00 A.M. UNLESS OTHERWISE PERMITTED BY EMWD.
28. PRIOR TO THE FINAL COVERAGE TEST, ONE (1) COMPLETE SET OF LAMINATED CONTROLLER CHARTS AND IRRIGATION AS-BUILT DRAWINGS SHALL BE PROVIDED TO THE DISTRICT. AT EMWD'S DISCRETION, A SECOND COPY OF CONTROLLER CHARTS SHALL BE PLACED IN THE CONTROLLER CABINET.
29. EDUCATE ALL MAINTENANCE PERSONNEL ON A CONTINUOUS BASIS OF THE PRESENCE OF RECYCLED WATER. PERSONNEL MUST BE INFORMED THAT RECYCLED WATER IS MEANT FOR IRRIGATION PURPOSES ONLY, AND IS NOT APPROVED FOR DRINKING PURPOSES, HAND WASHING, CLEANING OF TOOLS, ETC.

    IN CASE OF EMERGENCY, CONTACT CITY OF PERRIS (NAME)

    AT (951) 956-2120 (PHONE NO.) OR AFTER HOURS,

    CONTACT David Martinez AT (951) 956-2120 (PHONE NO.)

30. AN ON-SITE USER/SUPERVISOR SHALL BE DESIGNATED IN WRITING. THIS INDIVIDUAL SHALL BE FAMILIAR WITH PLUMBING SYSTEMS WITHIN THE PROPERTY, WITH THE BASIC CONCEPTS OF BACKFLOW/CROSS CONNECTION PROTECTION, THE RECYCLED PURVEYOR'S RULES AND REGULATIONS, AND THE SPECIFIC REQUIREMENTS OF A RECYCLED WATER SYSTEM. SAID PERSON IS REQUIRED TO PROVIDE A 24 HOUR CONTACT PHONE NUMBER AND ATTEND APPROVED SITE SUPERVISOR CLASS. COPIES OF THE DESIGNATION, WITH CONTACT PHONE NUMBERS SHALL BE PROVIDED TO EASTERN MUNICIPAL WATER DISTRICT.
31. FAILURE TO COMPLY WITH THESE NOTES AND EMWD'S RULES AND REGULATIONS IS A VIOLATION AND COULD RESULT IN SUSPENSION OF SERVICE UNTIL THE APPROPRIATE CORRECTIVE STEPS HAVE BEEN TAKEN.

OMISSION STATEMENT
AREAS SENSITIVE TO RECYCLED WATER IRRIGATION MUST MEET THE ENVIRONMENTAL RESTRICTIONS ASSOCIATED WITH THE PROJECT SITE AREA.

INITIAL WHICH APPLIES:

_X_ THERE ARE NO DRINKING FOUNTAINS, DECORATIVE FOUNTAINS, PONDS, RESTROOMS, OUTDOOR EATING AREAS, BENCHES, SWIMMING POOLS, PLAYGROUND EQUIPMENT, OR WELLS ON THE SITE.

THE FOLLOWING SHALL BE PROTECTED AGAINST CONTACT WITH RECYCLED WATER OVERSPRAY, MIST, OR RUN-OFF.

_____ ONE OR MORE OF THE FOLLOWING ITEMS EXIST ON SITE AND IS CLEARLY LABELED ON THE PLAN; DRINKING FOUNTAIN, DECORATIVE FOUNTAIN, POND, SWIMMING POOL, RESTROOM, OUTDOOR EATING AREAS, BENCHES, PLAYGROUND EQUIPMENT, WELLS, ETC. A BLUE COLORED POTABLE WATER WARNING TAPE STATING "CAUTION: BURIED WATERLINE BELOW" SHALL BE INSTALLED OVER THE POTABLE WATER SUPPLY LINE FOR THE ITEM AS REQUIRED BY THE EMWD INSPECTOR.

EMWD ON-SITE LANDSCAPE IRRIGATION DISCLAIMER
EMWD'S REVIEW AND APPROVAL OF THE LANDSCAPE DRAWINGS ARE FOR THE PURPOSES OF POINT OF CONNECTION (POC) AND SYSTEM DEMAND DATA ACQUISITION AND DEPARTMENT OF HEALTH SERVICES USE REQUIREMENTS ONLY AND DOES NOT REPRESENT AN ENDORSEMENT OR APPROVAL OF THE HYDRAULIC ADEQUACY AND RELIABILITY OF THE PLANNED IRRIGATION SYSTEM DESIGN. THE ULTIMATE DESIGN OF THE IRRIGATION SYSTEM SHOULD ACCOUNT FOR PRESSURE FLUCTUATIONS THAT ARE COMMON WITHIN THE RECYCLED WATER DISTRIBUTION SYSTEM AND INCLUDE INSTALLATION OF A PUMP (WITH LOW FLOW / LOW PRESSURE CUT OFF SWITCH), TO ENSURE ADEQUATE SYSTEM WATER PRESSURE FOR IRRIGATION.

LANDSCAPE MAINTENANCE RESPONSIBILITY NOTE
IT SHALL BE THE RESPONSIBILITY OF: CITY OF PERRIS
(OWNER/DEVELOPER AND LANDSCAPE MAINTENANCE COMPANY)

TO MAINTAIN ALL ON SITE AND OFF SITE RECYCLED WATER IRRIGATION IN ACCORDANCE WITH EMWD ORDINANCE 68 OR LATEST EDITION.

EMWD TIME LIMITATION NOTE
THE TIME LIMIT ON DRAWING APPROVAL SHALL BE SIX (6) MONTHS FROM THE DATE OF PLAN APPROVAL. IF CONSTRUCTION HAS NOT COMMENCED WITHIN THE STATED TIME, EMWD REQUIRES DRAWING(S) TO BE REVIEWED BY THE DEVELOPER/DESIGN ENGINEER AND/OR ARCHITECT AND RESUBMITTED TO EMWD FOR POSSIBLE CHANGES IN MASTER PLANNED FACILITIES, SPECIFICATIONS AND STANDARDS.

RESPONSIBILITY DISCLAIMER
ALL FACILITIES, EXISTING OR PROPOSED, WERE OBTAINED FROM CIVIL PLAN DRAWING D-110 (CIVIL PLAN NUMBER). ACTUAL SIZE AND LOCATION OF FACILITIES SHALL BE VERIFIED. CONTRACTOR SHALL POTHOLE ALL EXISTING UTILITIES TO VERIFY TIE-IN LOCATIONS, PIPE SIZE AND TYPE PRIOR TO ANY WORK BEING PERFORMED. EMWD AND (LANDSCAPE ARCHITECTURE FIRM) ALHAMBRA GROUP SHALL NOT BE HELD RESPONSIBLE FOR ACTUAL SIZE AND LOCATION. ANY DISCREPANCIES SHALL BE IMMEDIATELY BROUGHT TO THE ATTENTION OF THE DISTRICT ENGINEER.

EMWD - DECLARATION OF RESPONSIBLE CHARGE
I HEREBY DECLARE THAT I AM THE LANDSCAPE ARCHITECT OF WORK FOR THIS PROJECT, THAT I HAVE EXERCISED RESPONSIBLE CHARGE OVER THE DESIGN OF THIS PROJECT AS DEFINED IN SECTION 6703 OF THE BUSINESS AND PROFESSIONS CODE AND THAT THE DESIGN IS CONSISTENT WITH CURRENT STANDARDS.

I UNDERSTAND THAT THE PLAN CHECK OF THE PROJECT DRAWINGS AND SPECIFICATIONS BY THE CITY OF PERRIS, AND EASTERN MUNICIPAL WATER DISTRICT IS CONFINED TO A REVIEW ONLY AND DOES NOT RELIEVE ME, AS THE LANDSCAPE ARCHITECT OF WORK, OF MY RESPONSIBILITIES FOR PROJECT DESIGN.

FIRM NAME & ADDRESS: ALHAMBRA GROUP
41635 ENTERPRISE CIRCLE NORTH, SUITE C, TEMECULA, CA 92590

Vincent Di Donato — SIGNATURE — 4-13-26 — DATE

LA REGISTRATION NUMBER: 2017

EMWD STANDARD NOTE
CONSTRUCTION NOTE
EASTERN MUNICIPAL WATER DISTRICT REQUIRES THAT A PRE-CONSTRUCTION CONFERENCE BE SCHEDULED PRIOR TO ANY CONSTRUCTION BY CALLING THE EASTERN MUNICIPAL WATER DISTRICT FIELD ENGINEERING DEPARTMENT AT (951) 928-3777, EXTENSION 4830.

INSTALLATION NOTES
1. THE RECYCLED WATER IRRIGATION SYSTEM SHOWN ON THESE PLANS SHALL BE CONSTRUCTED IN ACCORDANCE WITH THE MOST RECENT EDITION OF THE EASTERN MUNICIPAL WATER DISTRICT STANDARDS AND SPECIFICATIONS FOR DEVELOPER'S PROJECTS.
2. HOSE BIBS ARE STRICTLY PROHIBITED ON RECYCLED WATER IRRIGATION SYSTEMS. POTABLE QUICK COUPLERS ARE NOT ALLOWED WITHIN THE RECYCLED WATER IRRIGATION AREA.

COLOR CODING NOTES
3. ALL IRRIGATION EMISSION DEVICES, SUCH AS SPRAY HEADS, ROTORS, BUBBLERS, DRIP EMITTERS, OR DRIP ASSEMBLIES SHALL BE IDENTIFIED WITH PURPLE IDENTIFICATION BODIES, COLLARS, CAPS, CONNECTORS, ADAPTERS, ETC. TO PERMANENTLY LABEL THE COMPONENTS AS EMITTING RECYCLED IRRIGATION WATER. THE PURPLE IDENTIFICATION SHALL BE EXPOSED TO THE SURFACE.
4. ALL IRRIGATION RISERS, DRIP LINE, AND COMPONENTS THAT ARE NOT AVAILABLE FROM THE MANUFACTURE WITH PURPLE RECYCLED WATER IDENTIFICATION SHALL BE LABELED WITH RECYCLED WATER DECALS OR STICKERS.
5. ALL IRRIGATION COMPONENTS AND VALVES MUST HAVE A RECYCLED WATER ID TAG AND A VALVE ID TAG IN A PURPLE VALVE BOX WITH A PURPLE LID. THE PURPLE LID SHALL BE HEAT BRANDED WITH THE VALVE LABEL.

RECYCLED WATER AND POTABLE WATER SEPARATION CLEARANCE NOTE
THE RECYCLED WATER IRRIGATION MAINLINE IS SHOWN DIAGRAMMATICALLY FOR CLARITY PURPOSES ONLY. THE RECYCLED WATER IRRIGATION MAINLINE MUST;

6. BE INSTALLED WITH A 4' (FOOT) MINIMUM HORIZONTAL CLEARANCE FROM ALL POTABLE WATERLINES AND FIRE LINES.
7. BE INSTALLED WITH A 1" (FOOT) OF VERTICAL CLEARANCE AND BE LOCATED UNDER ALL POTABLE WATERLINES AND FIRE LINES
8. WHERE THE RECYCLED WATER IRRIGATION MAINLINES MUST BE INSTALLED ABOVE THE POTABLE WATERLINE, A 4" (INCH) MINIMUM VERTICAL CLEARANCE MUST BE MAINTAINED AND THE RECYCLED WATER IRRIGATION MAINLINE MUST BE INSTALLED IN A CONTINUOUS SLEEVE (PVC CLASS 200 PIPE MINIMUM) WHICH EXTENDS A MINIMUM OF 10' (FEET) EACH SIDE OF THE POTABLE WATERLINE OR FIRE LINE.

DECLARATION OF RESPONSIBLE CHARGE

I hereby declare that I am the Landscape Architect of Work for this project, that I have exercised responsible charge over the design of the project as defined in Sections 5615 through 5683 of the California Business and Professions Code, and that the design is consistent with current standards.
I understand that the check of the project plans and specifications by the City of Perris and Eastern Municipal Water District (EMWD) is confined to a review only and does not relieve me, as Landscape Architect of Work, of my responsibilities for project design. The plan check is not a determination of the technical adequacy of the design of these improvements.
The plans and specifications have been prepared in substantial conformance with all special conditions of approval related to landscape improvements.
I agree to comply with the requirements of MMC Chapter 15.04 and submit a complete Landscape Documentation Package.

Landscape Architect's Name: VINCENT DI DONATO
Address: 41635 ENTERPRISE CIRCLE NORTH, SUITE C, TEMECULA, CA 92590
Telephone: (951) 296-6802

OWNER
CITY OF PERRIS
24 S. D STREET, SUITE 100
PERRIS, CA 92570
T: (951) 956-2120

ENGINEER
CITY OF PERRIS
24 S. D STREET, SUITE 100
PERRIS, CA 92570
T: (951) 956-2120

PROJECT INFORMATION
PROJECT IS NEW LANDSCAPE
CITY MAINTAINED/ FIRE STATION

REQUIRED LANDSCAPE INSPECTIONS CFD-MAINTAINED AREAS

Inspections by the City of PERRIS consulting Landscape Architect are required during the installation of landscape improvements on this project. Inspections shall be performed by the consulting Landscape Architect, and the work shall be substantially complete before the project final inspection by the City's Engineering Department.

Inspections shall be scheduled with the City's consulting Landscape Architect at least 48 hours in advance (two working days). Contact information is listed below. The Owner's or Contractor's representative shall schedule inspections only when the landscape contractor agrees that the work is ready for inspection.

When a scheduled inspection visit is made, but must be rescheduled due to the work not being ready, or to the Contractor's absence, the project deposit account will be charged for the additional inspection time.

Engineering Dept: (951) 956-2120
Mobile: (951) 956-2120
Email: DMartinez@cityofperris.org

The Contractor shall schedule the required landscape inspections including, but not limited to, the following (inspections may be combined):

1. Pre-construction meeting prior to start of work
2. Grading and Construction
   a. Finish grading.
   b. Staking of flatwork.
   c. Concrete formwork and reinforcement.
   d. Trail improvements.
   e. Boulder placement.
3. Irrigation
   a. Trenching for irrigation main lines and lateral pipe.
   b. Installation and pressure testing of main lines and lateral lines prior to backfilling trenches.
   c. Installation and testing of backflow prevention devices, remote control valves, control wires, and automatic controllers.
   d. Operation and coverage tests (prior to planting) after irrigation system completion.
4. Planting
   a. Soil preparation and application of amendments (supply delivery slips and invoices).
   b. Completion of finish grading prior to planting.
   c. Approval of plant materials upon delivery to site.
   d. Tree and shrub locations, before excavation of planting pits.
   e. Installation of plant material.
5. Substantial Completion and Maintenance Period
   a. For turnkey projects, developer's representative shall submit bond release.
   b. Initial inspection for substantial completion/punch list preparation, and start of maintenance period.
   c. Final site inspection/satisfactory completion of maintenance period.

Additional inspections may be required as determined by the City Engineer/Consulting Landscape Architect.

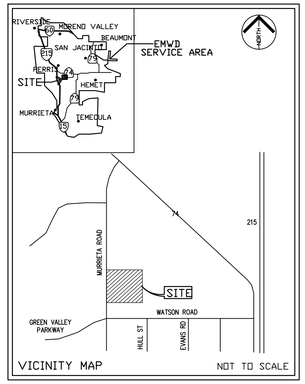

SHEET NUMBER INDEX

SHEET#	PAGE#	DESCRIPTION
1	L-1	TITLE SHEET
2	L-2	SHEET INDEX MAP
3	L-3	IRRIGATION PLAN
4	L-4	IRRIGATION CALC'S AND NOTES
5-8	L-5,L-6,L-7,L-8	IRRIGATION DETAILS
9	L-9	IRRIGATION SPECIFICATIONS
10	L-10	PLANTING PLANS (NOT A PART OF EMWD PLANS)
11	L-11	PLANTING DETAILS and SPECIFICATIONS (NAP EMWD PLANS)

WO 16832

DIG ALERT
Call: TOLL FREE 1-800-227-2600 OR 811
TWO FULL WORKING DAYS BEFORE YOU DIG

BENCH MARK
DESCRIPTION:
LOCATION:
VERTICAL DATUM:
HORIZONTAL DATUM:

ALHAMBRA GROUP
LANDSCAPE ARCHITECTURE
California license #2017
RECREATION FACILITIES PLANNING
41635 Enterprise Circle North, Suite C
TEMECULA, CA 92590 (951) 296-6802
CELL PHONE (951) 970-6156
EMAIL vince@alhambragroup.net

REGISTERED LANDSCAPE ARCHITECT — VINCENT DI DONATO — Vincent Di Donato — 4-13-26 — 9-30-27 EXP. — STATE OF CALIFORNIA

DATE: 4-13-26
DRAWN BY: VD
CHECKED BY: VD

REVISIONS

DATE	BY	MARK	DESCRIPTION	APPR.	DATE
	ENGINEER			EMWD	

ACCEPTED BY:
EASTERN MUNICIPAL WATER DISTRICT
EMWD ENGINEER — DATE

DEPARTMENT	ACCEPTANCE	DATE
DS PLAN CHECKER		
OPERATIONS		
ENGINEERING		
DC ENGINEER		

CITY OF PERRIS
SOUTH PERRIS FIRE STATION
WATER USE IMPROVEMENTS
RWIP
TITLE SHEET

	RWIP:
DDPP.	RWUE: 16832
COORD. 30-D	RWUP:
I.D. 98	SHT. 1 OF 11
S.A. 35	D-

EMWD STANDARD NOTE

CONSTRUCTION NOTE
EASTERN MUNICIPAL WATER DISTRICT REQUIRES THAT A PRE-CONSTRUCTION CONFERENCE BE SCHEDULED PRIOR TO ANY CONSTRUCTION BY CALLING EASTERN MUNICIPAL WATER DISTRICT RECYCLED WATER PROGRAM COORDINATOR AT (951) 928-3777, EXTENSION 4412.

INSTALLATION NOTES
1. THE RECYCLED WATER IRRIGATION SYSTEM SHOWN ON THESE PLANS SHALL BE CONSTRUCTED IN ACCORDANCE WITH THE MOST RECENT EDITION OF THE EASTERN MUNICIPAL WATER DISTRICT STANDARDS AND SPECIFICATIONS FOR DEVELOPER'S PROJECTS.
2. HOSE BIBS ARE STRICTLY PROHIBITED ON RECYCLED WATER IRRIGATION SYSTEMS. POTABLE QUICK COUPLERS ARE NOT ALLOWED WITHIN THE RECYCLED WATER IRRIGATION AREA.

COLOR CODING NOTES
3. ALL IRRIGATION EMISSION DEVICES, SUCH AS SPRAY HEADS, ROTORS, BUBBLERS, DRIP EMITTERS, OR DRIP ASSEMBLIES SHALL BE IDENTIFIED WITH PURPLE IDENTIFICATION BODIES, COLLARS, CAPS, CONNECTORS, ADAPTERS, ETC. TO PERMANENTLY LABEL THE COMPONENTS AS EMITTING RECYCLED IRRIGATION WATER. THE PURPLE IDENTIFICATION SHALL BE EXPOSED TO THE SURFACE.
4. ALL IRRIGATION RISERS, DRIP LINE, AND COMPONENTS THAT ARE NOT AVAILABLE FROM THE MANUFACTURE WITH PURPLE RECYCLED WATER IDENTIFICATION SHALL BE LABELED WITH RECYCLED WATER DECALS OR STICKERS.
5. ALL IRRIGATION COMPONENTS AND VALVES MUST HAVE A RECYCLED WATER ID TAG AND A VALVE ID TAG IN A PURPLE VALVE BOX WITH A PURPLE LID. THE PURPLE LID SHALL BE HEAT BRANDED WITH THE VALVE LABEL.

RECYCLED WATER AND POTABLE WATER SEPARATION CLEARANCE NOTE
THE RECYCLED WATER IRRIGATION MAINLINE IS SHOWN DIAGRAMMATICALLY FOR CLARITY PURPOSES ONLY. THE RECYCLED WATER IRRIGATION MAINLINE MUST;

6. BE INSTALLED WITH A 4' (FOOT) MINIMUM HORIZONTAL CLEARANCE FROM ALL POTABLE WATERLINES AND FIRE LINES.
7. BE INSTALLED WITH A 1' (FOOT) OF VERTICAL CLEARANCE AND BE LOCATED UNDER ALL POTABLE WATERLINES AND FIRE LINES.
8. WHERE THE RECYCLED WATER IRRIGATION MAINLINES MUST BE INSTALLED ABOVE THE POTABLE WATERLINE, A 4" (INCH) MINIMUM VERTICAL CLEARANCE MUST BE MAINTAINED AND THE RECYCLED WATER IRRIGATION MAINLINE MUST BE INSTALLED IN A CONTINUOUS SLEEVE (PVC CLASS 200 PIPE MINIMUM) WHICH EXTENDS A MINIMUM OF 10' (FEET) EACH SIDE OF THE POTABLE WATERLINE OR FIRE LINE.

POC METER DATA TABLE

WATER METER #1	
P.O.C. DESIGNATION	METER 1
STREET STATION	71+90.15
SERVICE LATERAL LINE SIZE (IN)	2"
RECYCLED WATER METER SIZE (IN)	1"
EMWD METER DETAIL REFERENCE NUMBER	PB-10A
DESIGN MAX FLOW (GPM)	6
CHEMICAL INJECTION SYSTEM (Y/N)	NO
BOOSTER PUMP (PSI BOOST)	NO
METER ELEVATION (FT)	1405.84
PRESSURE RANGE (PSI)	75 psi
DESIGN PRESSURE (PSI)	60 PSI
TOTAL AREA SERVED (SF)	39,204
ANNUAL WATER USAGE (ACRE/FT)	2.16
EMWD REFERENCE DRAWING NUMBER	D-XXXXX
INITIAL SOURCE OF WATER SUPPLY	RECYCLED
IRRIGATION TYPE (DRIP, SPRAY, ROTOR, ETC)	DRIP
WATER WINDOW RESTRICTED	UNRESTRICTED

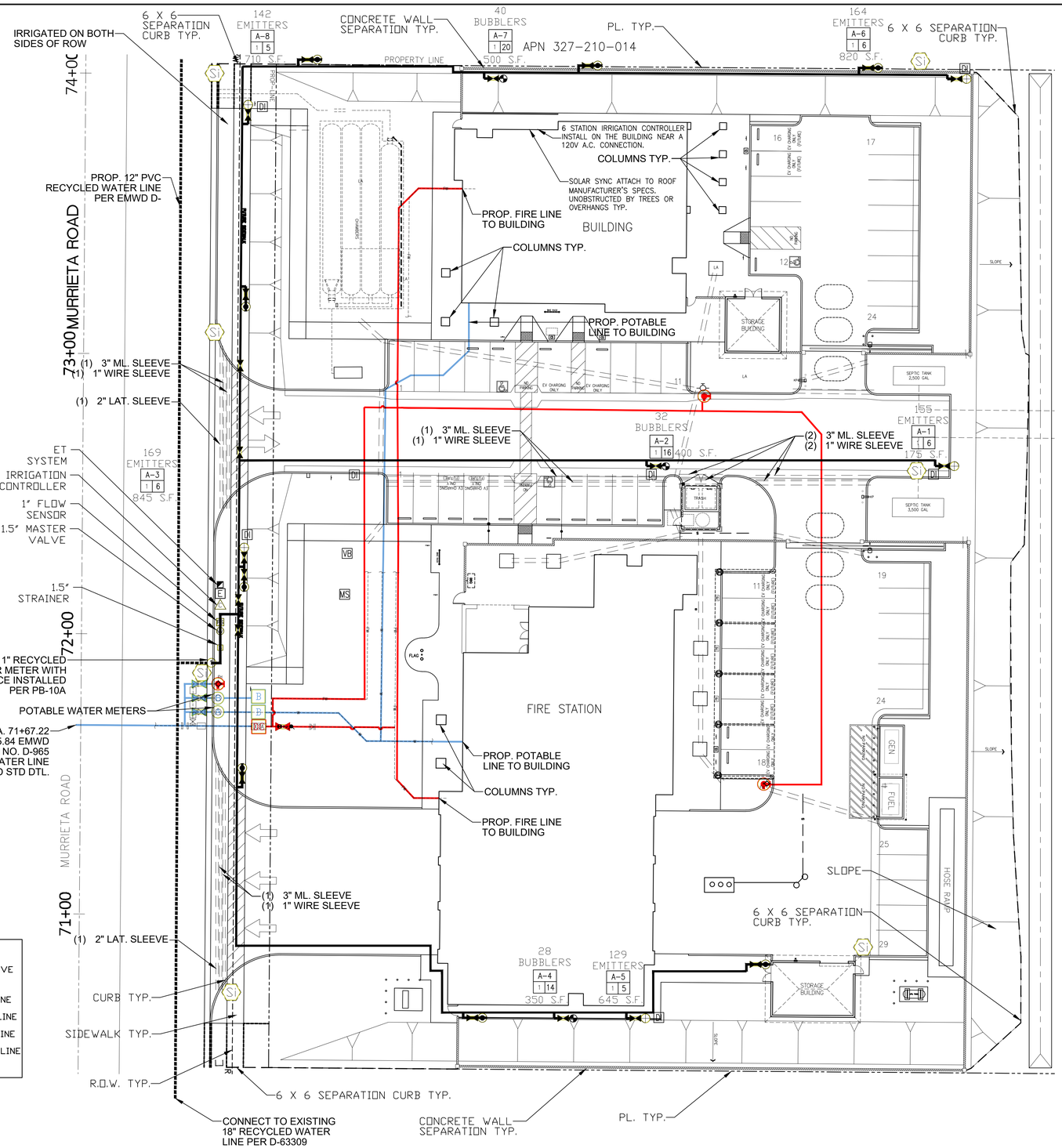

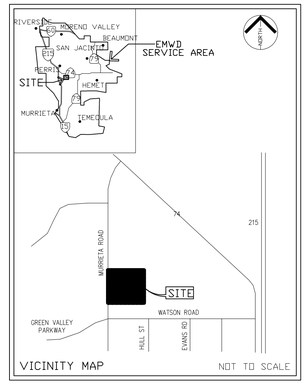

WO 16832

I AGREE TO COMPLY WITH THE CRITERIA OF ORDINANCE (MMC 15.04) AND TO APPLY THEM FOR THE EFFICIENT USE OF WATER IN THE IRRIGATION DESIGN PLAN.

Vincent DiDonato — 4-13-26
APPLICANT/ LANDSCAPE ARCHITECT — DATE

PRIOR TO BACKFILLING THE PARTY RESPONSIBLE FOR IRRIGATION INSTALLATION SHALL CONDUCT A PRELIMINARY FIELD INSPECTION OF THE IRRIGATION SYSTEM.

AFTER PROJECT INSTALLATION AN AUDIT SHALL BE CONDUCTED BY A CERTIFIED IRRIGATION AUDITOR AND FINDINGS STATED IN A REPORT.

CONTRACTOR SHALL PREPARE CONTROLLER CHARTS DEPICTING VALVE CIRCUITS. INSTALL CHARTS IN THE CONTROLLER.

RECYCLED IRRIGATION LEGEND (LANDSCAPE)

DESCRIPTION	
PROJECT BOUNDARY	
PROPOSED MAINLINE	
IRRIGATION CONTROLLER	
FLOW SENSOR VALVE	
MOISTURE SENSOR	
ISOLATION VALVE	
RECYCLED WATER METER	
QUICK COUPLER VALVE	
EMWD RECYCLED WATER USE SIGNAGE	
STRAINER	
MASTER VALVE	
REMOTE CONTROL VALVE (DRIP)	
SLEEVE	

OFF-SITE WATER LEGEND (CIVIL)

RECYCLED WATER BLOW-OFF VALVE	
FIRE HYDRANT	
EXISTING POTABLE WATER MAINLINE	
EXISTING RECYCLED WATER MAINLINE	
PROPOSED POTABLE WATER MAINLINE	
PROPOSED RECYCLED WATER MAINLINE	
PROPOSED FIRELINE	

NORTH
0 10' 20' 60'

DIG ALERT
Call: TOLL FREE 1-800-227-2600 OR 811
TWO FULL WORKING DAYS BEFORE YOU DIG

BENCH MARK
DESCRIPTION:
LOCATION:
VERTICAL DATUM:
HORIZONTAL DATUM:

ALHAMBRA GROUP
LANDSCAPE ARCHITECTURE
California license #2017
RECREATION FACILITIES PLANNING
41635 Enterprise Circle North, Suite C
TEMECULA, CA 92590 (951) 296-6802
CELL PHONE (951) 970-6156
EMAIL vince@alhambragroup.net

REGISTERED LANDSCAPE ARCHITECT — VINCENT DI DONATO — 4-13-26 EXP. 9-30-27 — STATE OF CALIFORNIA

DATE: 4-13-26
DRAWN BY: VD
CHECKED BY: VD

REVISIONS

DATE	BY	MARK	DESCRIPTION	APPR.	DATE
	ENGINEER			EMWD	

ACCEPTED BY:
EASTERN MUNICIPAL WATER DISTRICT
EMWD ENGINEER — DATE

DEPARTMENT	ACCEPTANCE	DATE
DS PLAN CHECKER		
OPERATIONS		
ENGINEERING		
DC ENGINEER		

CITY OF PERRIS

SOUTH PERRIS FIRE STATION
WATER USE IMPROVEMENTS
RWIP
SHEET INDEX MAP

	RWIP:
DDPP.	RWUE: 16832
CDDRD. 30-D	RWUP:
I.D. 98	SHT. 2 OF 11
S.A. 35	D-

I AGREE TO COMPLY WITH THE CRITERIA OF ORDINANCE (MMC 15.04) AND TO APPLY THEM FOR THE EFFICIENT USE OF WATER IN THE IRRIGATION DESIGN PLAN.

Vincent DiDonato — 4-13-26

APPLICANT/ LANDSCAPE ARCHITECT — DATE

PRIOR TO BACKFILLING THE PARTY RESPONSIBLE FOR IRRIGATION INSTALLATION SHALL CONDUCT A PRELIMINARY FIELD INSPECTION OF THE IRRIGATION SYSTEM.

AFTER PROJECT INSTALLATION AN AUDIT SHALL BE CONDUCTED BY A CERTIFIED IRRIGATION AUDITOR AND FINDINGS STATED IN A REPORT.

CONTRACTOR SHALL PREPARE CONTROLLER CHARTS DEPICTING VALVE CIRCUITS. INSTALL CHARTS IN THE CONTROLLER.

EMWD STANDARD NOTE

CONSTRUCTION NOTE

EASTERN MUNICIPAL WATER DISTRICT REQUIRES THAT A PRE-CONSTRUCTION CONFERENCE BE SCHEDULED PRIOR TO ANY CONSTRUCTION BY CALLING EASTERN MUNICIPAL WATER DISTRICT RECYCLED WATER PROGRAM COORDINATOR AT (951) 928-3777, EXTENSION 4412.

INSTALLATION NOTES

1. THE RECYCLED WATER IRRIGATION SYSTEM SHOWN ON THESE PLANS SHALL BE CONSTRUCTED IN ACCORDANCE WITH THE MOST RECENT EDITION OF THE EASTERN MUNICIPAL WATER DISTRICT STANDARDS AND SPECIFICATIONS FOR DEVELOPER'S PROJECTS.
2. HOSE BIBS ARE STRICTLY PROHIBITED ON RECYCLED WATER IRRIGATION SYSTEMS. POTABLE QUICK COUPLERS ARE NOT ALLOWED WITHIN THE RECYCLED WATER IRRIGATION AREA.

COLOR CODING NOTES

3. ALL IRRIGATION EMISSION DEVICES, SUCH AS SPRAY HEADS, ROTORS, BUBBLERS, DRIP EMITTERS, OR DRIP ASSEMBLIES SHALL BE IDENTIFIED WITH PURPLE IDENTIFICATION BODIES, COLLARS, CAPS, CONNECTORS, ADAPTERS, ETC. TO PERMANENTLY LABEL THE COMPONENTS AS EMITTING RECYCLED IRRIGATION WATER. THE PURPLE IDENTIFICATION SHALL BE EXPOSED TO THE SURFACE.
4. ALL IRRIGATION RISERS, DRIP LINE, AND COMPONENTS THAT ARE NOT AVAILABLE FROM THE MANUFACTURE WITH PURPLE RECYCLED WATER IDENTIFICATION SHALL BE LABELED WITH RECYCLED WATER DECALS OR STICKERS.
5. ALL IRRIGATION COMPONENTS AND VALVES MUST HAVE A RECYCLED WATER ID TAG AND A VALVE ID TAG IN A PURPLE VALVE BOX WITH A PURPLE LID. THE PURPLE LID SHALL BE HEAT BRANDED WITH THE VALVE LABEL.

RECYCLED WATER AND POTABLE WATER SEPARATION CLEARANCE NOTE

THE RECYCLED WATER IRRIGATION MAINLINE IS SHOWN DIAGRAMMATICALLY FOR CLARITY PURPOSES ONLY. THE RECYCLED WATER IRRIGATION MAINLINE MUST;

6. BE INSTALLED WITH A 4' (FOOT) MINIMUM HORIZONTAL CLEARANCE FROM ALL POTABLE WATERLINES AND FIRE LINES.
7. BE INSTALLED WITH A 1' (FOOT) OF VERTICAL CLEARANCE AND BE LOCATED UNDER ALL POTABLE WATERLINES AND FIRE LINES.
8. WHERE THE RECYCLED WATER IRRIGATION MAINLINES MUST BE INSTALLED ABOVE THE POTABLE WATERLINE, A 4" (INCH) MINIMUM VERTICAL CLEARANCE MUST BE MAINTAINED AND THE RECYCLED WATER IRRIGATION MAINLINE MUST BE INSTALLED IN A CONTINUOUS SLEEVE (PVC CLASS 200 PIPE MINIMUM) WHICH EXTENDS A MINIMUM OF 10' (FEET) EACH SIDE OF THE POTABLE WATERLINE OR FIRE LINE.

DRIP SYSTEM PRESSURE LOSS CALCS.

VALVE A3 @ 6 G.P.M.

PRESSURE AVAILABLE AT METER : *78.0 P.S.I.*

REGULATED PRESSURE: *60.0 P.S.I.*

EQUIPMENT	SIZE	P.S.I. LOSS
METER	1"	(0.3)
STRAINER	2"	(5.0)
MASTER VALVE	1-1/2"	(1.5)
FLOW SENSOR	1"	(2.0)
BALL VALVE	1-1/2"	(.1)
R.C.V.	1"	(1.5)
MAIN LINE	1-1/2"	(0.1)
ELEVATION CHANGE	6'	(3.0)

P.S.I. LOSS BEFORE PRESSURE REGULATOR: *(13.5 P.S.I.)*

PRESSURE AVAILABLE AT R.C.V BEFORE PR: *46.5 P.S.I.*

REGULATOR REDUCES PRESSURE TO: *40.0 P.S.I.*

EQUIPMENT	SIZE	P.S.I. LOSS
LATERAL LINES	VARIES	(2.0)
EMITTERS (OPERATING PRESSURE 25 PSI)	N/A	(25.0)
ELEVATION CHANGE	0'	(0.0)

P.S.I. LOSS AFTER PRESSURE REGULATOR: *(27.0 P.S.I.)*

TOTAL RESIDUAL PRESSURE: *13.0 P.S.I.*

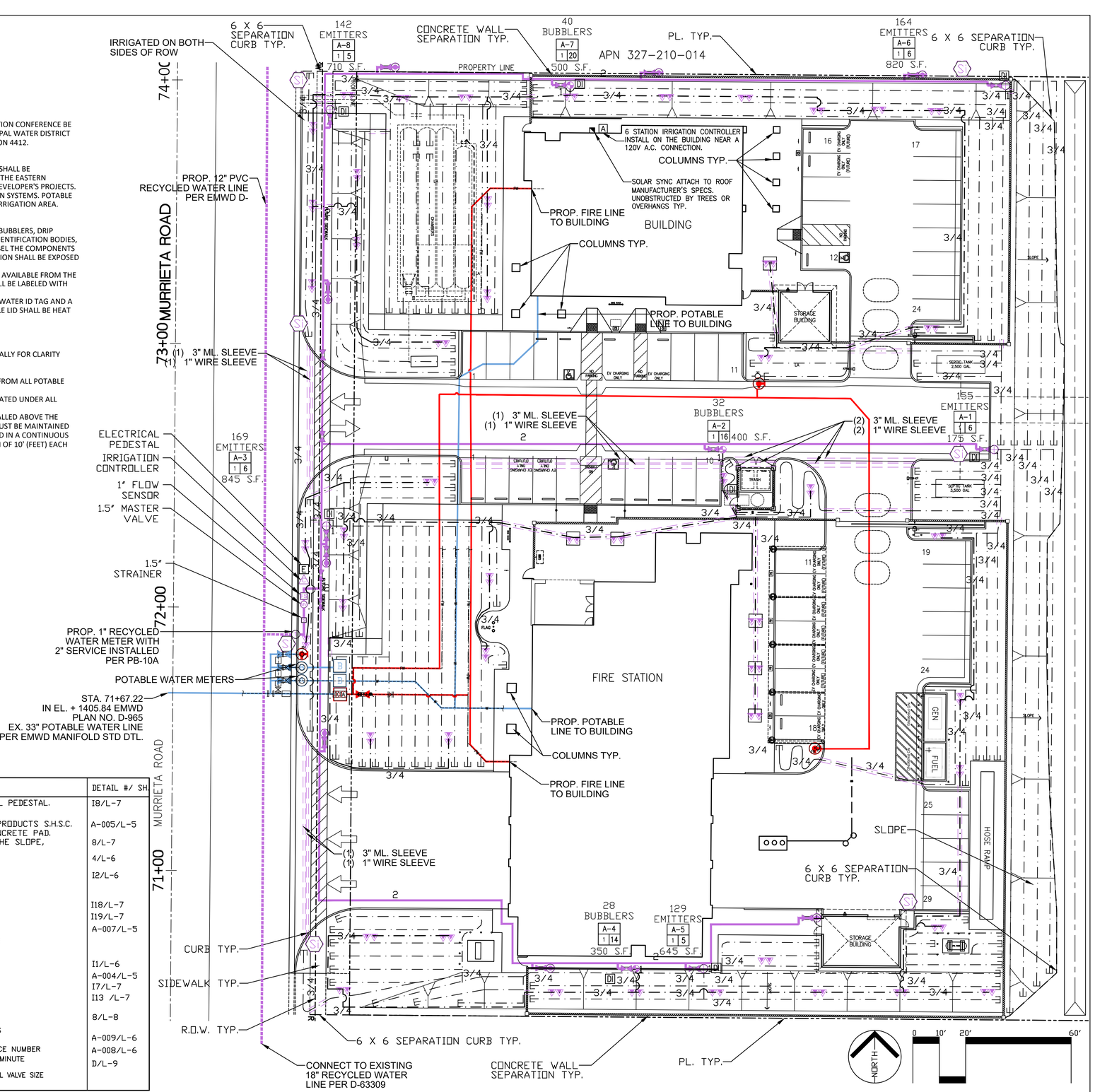

IRRIGATION LEGEND

SYMBOL	MANUFACTURER	MODEL NO.	REMARKS - SEE SHEET L-5 - L-8 FOR DETAILS AND L-9 FOR IRRIGATION SPECIFICATIONS	DETAIL #/ SH.
	WEATHER TRAK	ET PRO3	12 STATION AUTOMATIC CONTROLLER IN A STAINLESS STEEL PEDESTAL NEAR A 120V A.C. ELECTRICAL PEDESTAL.	I8/L-7
	YARDNEY		2" SCREEN FILTER FACTORY POWER COATED PURPLE W/ FLANGES, 80 MESH FILTER IN SENTRY PRODUCTS S.H.S.C. ENCLOSURE. PROVIDE (1) EXTRA 80 MESH FILTER PER BASKET STRAINER WITH ENCLOSURE ON CONCRETE PAD.	A-005/L-5
	FLO-CONTROL	1520-10/1012-10	SWING TYPE OR SPRING TYPE CHECK VALVE. USE SWING CHECK WHEN RCV IS AT THE TOE OF THE SLOPE, USE SPRING CHECK WHEN RCV IS AT THE TOP. LINE SIZE BY LATERAL LINE.	8/L-7
	RAINBIRD	XCZ-100-PRB-COM-R	1" REMOTE CONTROL VALVE KIT	4/L-6
	RAINBIRD	PRS-D-1	1" TREE BUBBLER VALVE	I2/L-6
	RAINBIRD	PESB-R	1-1/2" MASTER CONTROL VALVE NORMALLY CLOSED.	I18/L-7
	CST	CST-1	1" CST FLOW METER	I19/L-7
	HUNTER	HW-44LRC-AW-R	1" QUICK COUPLING VALVE W/ PURPLE CAP FOR RECYCLED	A-007/L-5
NOT SHOWN	RAINBIRD	XBT-20PC	2 GPH DRIP EMITTER W/ DIFFUSOR (LOW WATER - 1 EMITTER FOR EACH SHRUB OR GROUNDCOVER	
	NIBCO	T-580	BRASS BALL VALVE LINE SIZE WITH PURPLE HANDLE - TYPICAL	I1/L-6
	PAC. PLASTICS	SCH 40	PURPLE PRESSURE TYPE MAINLINE	A-004/L-5
	PAC. PLASTICS	SCH 40	PURPLE NON-PRESSURE TYPE SLEEVE	I7/L-7
	PAC. PLASTICS	SCH 40	PURPLE NON-PRESSURE LATERAL LINE 12" BELOW GRADE INSTALL 12" BELOW GRADE-SEE DETAILS	I13 /L-7
	RAINBIRD	1402 BUBBLER	INSTALL 1 BUBBLER IN EACH RWSBC DEEP WATER KIT AND 2 KITS PER EACH TREE	8/L-8
	DURA	SCH 80	PURPLE MANUAL FLUSH VALVE PER EMWD REQUIREMENTS	A-009/L-6
	EMWD SIGN	PER EMWD	EMWD SIGN PER EMWD REQUIREMENTS	A-008/L-6
DI	RAINBIRD	DPERIND	DRIP INDICATOR W/ PURPLE CAP, INSTALL IN PLANTERS, SEE DETAIL	D/L-9

142 EMITTERS — VALVE EMITTERS
1A — VALVE SEQUENCE NUMBER
L 10 — GALLONS PER MINUTE
1,093 S.F. — REMOTE CONTROL VALVE SIZE / VALVE AREA

DIG ALERT — CALL BEFORE YOU DIG — Call: TOLL FREE 1-800-227-2600 OR 811 — TWO FULL WORKING DAYS BEFORE YOU DIG

BENCH MARK
DESCRIPTION:
LOCATION:
VERTICAL DATUM:
HORIZONTAL DATUM:

ALHAMBRA GROUP
LANDSCAPE ARCHITECTURE
California license #2017
RECREATION FACILITIES PLANNING
41635 Enterprise Circle North, Suite C
TEMECULA, CA 92590 (951) 296-6802
CELL PHONE (951) 970-6156
EMAIL vince@alhambragroup.net

REGISTERED LANDSCAPE ARCHITECT — VINCENT DI DONATO — 2017 — Vincent DiDonato — 4-13-26 — EXP. 9-30-27 — STATE OF CALIFORNIA

DATE: 4-13-26
DRAWN BY: VD
CHECKED BY: VD

REVISIONS

DATE	BY	MARK	DESCRIPTION	APPR.	DATE
	ENGINEER			EMWD	

ACCEPTED BY:
EASTERN MUNICIPAL WATER DISTRICT
EMWD ENGINEER — DATE

DEPARTMENT	ACCEPTANCE	DATE
DS PLAN CHECKER		
OPERATIONS		
ENGINEERING		
DC ENGINEER		

CITY OF PERRIS

SOUTH PERRIS FIRE STATION
WATER USE IMPROVEMENTS
RWIP

IRRIGATION PLAN

	RWIP:
DDPP.	RWUE: 16832
COORD. 30-D	RWUP:
I.D. 98	SHT. 3 OF 11
S.A. 35	D-

WATER METER #2
DRIP SCHEDULE LOW WATER USE

	ETO	% ETO	CU. FT.	GALLONS	DAYS	GPM	MIN	G/DAY
JANUARY	2.10	0.04	203	1,520.21	4.00	30.20	13	380
FEBRUARY	2.75	0.05	266	1,990.75	5.00	30.20	13	398
MARCH	3.90	0.07	377	2,823.24	7.00	30.20	13	403
APRIL	4.90	0.09	474	3,547.15	8.00	30.20	15	443
MAY	6.00	0.10	581	4,343.45	10.00	30.20	14	434
JUNE	7.40	0.13	716	5,356.92	12.00	30.20	15	446
JULY	7.75	0.14	750	5,610.28	13.00	30.20	14	432
AUGUST	7.40	0.13	716	5,356.92	12.00	30.20	15	446
SEPTEMBER	6.00	0.10	581	4,343.45	10.00	30.20	14	434
OCTOBER	4.00	0.07	387	2,895.63	7.00	30.20	14	414
NOVEMBER	3.00	0.05	290	2,171.72	5.00	30.20	14	434
DECEMBER	2.10	0.04	203	1,520.21	4.00	30.20	13	380
	57.30	1.00	5,545	41,479.90				

RUN THE SYSTEMS FOR THE TIME SHOWN EVERDAY FOR THE ESTABLISHMENT PERIOD THE MINUTES SHOWN ARE FOR EACH VALVE.

IRRIGATION NOTES

1. IRRIGATION SYSTEM IS SHOWN DIAGRAMMATICALLY. LOCATE ALL PIPE AND EQUIPMENT WITHIN PLANTING AREAS WHEREVER POSSIBLE.
2. LOCATE PRESSURE LINES WITHIN 18" OF EDGE OF HARDSCAPE IN PLANTING AREAS.
3. NO LOW HEAD DRAINAGE ALLOWED. CONTRACTOR SHALL ADD CHECK VALVES AS REQUIRED.
4. TREE LOCATIONS TAKE PRECEDENCE OVER IRRIGATION PIPING & DRIP LINE. STAKE TREE LOCATIONS PRIOR TO TRENCHING PIPE.
5. CONTRACTOR SHALL ARRANGE AND PAY FOR ALL NECESSARY CONNECTIONS FOR 120V A.C. ELECTRICAL SERVICE TO IRRIGATION CONTROLLER.
6. CONTRACTOR SHALL INSPECT THE SITE AND VERIFY ALL CONDITIONS PRIOR TO PROCEEDING WITH ANY WORK. TO ALLOW FOR ADEQUATE IRRIGATION COVERAGE AS SHOWN ON PLAN, ADJUST LINE & EMITTERS TO COMPENSATE FOR ANY CHANGES IN AREA.
7. TO ENSURE PROPER LOCATION OF IRRIGATION SLEEVE INSTALLATION COORDINATE LOCATION OF MAINLINE, DRIP LINES AND CONTROL WIRES WITH ALL OTHER RELATED TRADES AS REQ.
8. ALL BRASS FITTINGS TO BE RED BRASS TYPICAL.
9. USE 3/4" TEFLON TAPE ON ALL THREADED CONNECTIONS.
10. IRRIGATION SYSTEMS DESIGNED FROM A STATIC WATER PRESSURE OF 60 P.S.I., REGULATOR IS SHOWN TO ADJUST PRESSURE TO 60 P.S.I. MAX. IN MAIN LINE. CONTRACTOR SHALL VERIFY WATER PRESSURE AT WORST CONDITION AND CONTACT LANDSCAPE ARCHITECT IF ANY INCONSISTENCIES OCCUR.
11. ALL IRRIGATION SHALL CONFORM TO THE CITY OF MENIFEE STANDARDS AND SPECIFICATIONS.
12. ALL PRIVATE LANDSCAPE IRRIGATION COMPONENTS, INCLUDING PIPING, SHALL BE INSTALLED ON SITE ONLY AND OUT OF PUBLIC RIGHTS-OF-WAY (OFFSITE) EXCEPT AS REQUIRED TO CONNECT PRESSURE MAINLINE TO THE DESIGNATED ON SITE WATER METER.
13. OFFSITE/CFD SHALL BE SEPARATED FROM ON SITE IRRIGATED AREAS WITH A CITY-STANDARD, CONTINUOUS CONCRETE MOW CURB (6"X6") ALONG THE PROPERTY LINE (ONSITE).

Irrigation Valves Demand Run Time Spreadsheet
Daily July Water Scheduling

POC ID	Valve No.	GPM	Irrigated Area (S.F.)	Run Time (minutes) Drip	Plant Factor	System Type: Application Method (drip)
1	1	3	665	15	0.2	Drip
1	2	6	780	15	0.2	Drip
1	3	5	720	15	0.2	Drip
1	4	4	480	15	0.2	Drip
1	5	6	820	15	0.2	Drip
1	6	4	475	15	0.2	Drip
1	7	4	600	15	0.2	Drip
Total Run Times:		**7 valves at 15 minutes each = 105 minutes**				

A. ALL VALVE BOXES ARE SPECIFIED WITH PURPLE LIDS

B. ALL VALVE BOXES ARE SPECIFIED WITH BOLTS FOR LOCKING

C. ALL VALVE BOXES ARE SPECIFIED WITH ''HEAT BRANDING FOR LABELS"

D. ALL VALVE HAVE CHRISTY RECYCLED ID TAGS

WATER METER #2 - CITY OF PERRIS
ESTIMATED ANNUAL WATER USE

LANDSCAPE IRRIGATION WATER ANALYSIS

PROJECT:
S. PERRIS FIRE STATION
MENIFEE ROAD
MENIFEE, CA

Project ETo: 57.33

ANNUAL MAXIMUM APPLIED WATER BUDGET:
(BILLING UNITS/YEAR)

$$AMAWB=\frac{(ETo)x(0.5)x(Total\ Sq.\ Ft.)}{1200}$$

$$\frac{57.33 \times 0.5 \times 4,540}{1200} = 108 \text{ BILLING UNITS/YEAR}$$

81120 Gallons Per Year

ESTIMATED ANNUAL WATER USE:
(BILLING UNITS/YEAR)

$$EAWU=\frac{(ETo)x(Crop\ Coefficient)x(Hydrozone\ Sq.\ Ft.)}{(Distribution\ Efficiency)x(Application\ Efficiency)x(1200)}$$

HYDROZONE # 1: (Low Shrub Area with drip)

$$\frac{57.33 \times 0.2 \times 4,540}{0.9 \times 0.85 \times 1200} = 57 \text{ B.U/Yr}$$

42416 Gallons Per Year

HYDROZONE # 2: (MED Shrub Area with drip)

$$\frac{57.33 \times 0.2 \times 0}{0.9 \times 0.85 \times 1200} = 0 \text{ B.U/Yr}$$

0 Gallons Per Year

ANNUAL WATER BUDGET: 108 B.U/Yr
81120 Gallons Per Year

TOTAL ESTIMATED ANNUAL WATER 57 B.U/Yr
42416 Gallons Per Year

42416 Gallons Per Year
116 Gallons Per Day
813 Gallons Per Week
4 Irrigation Days Per Week
203 Gallons Per Irrigation Day
7 Average Demand in GPM (average valve GPM)
0 Hours Per Day

CALCULATIONS ARE BASED ON WETTABLE AREA FOR EACH TREE AND SHRUB ONLY

EMWD STANDARD NOTE

CONSTRUCTION NOTE
EASTERN MUNICIPAL WATER DISTRICT REQUIRES THAT A PRE-CONSTRUCTION CONFERENCE BE SCHEDULED PRIOR TO ANY CONSTRUCTION (**INCLUDING DOMESTIC AND FIRE MAINLINES**) BY CALLING EASTERN MUNICIPAL WATER DISTRICT RECYCLED WATER PROGRAM COORDINATOR AT (951) 928-3777, EXTENSION 4412.

INSTALLATION NOTES
1. THE RECYCLED WATER IRRIGATION SYSTEM SHOWN ON THESE PLANS SHALL BE CONSTRUCTED IN ACCORDANCE WITH THE MOST RECENT EDITION OF THE EASTERN MUNICIPAL WATER DISTRICT STANDARDS AND SPECIFICATIONS FOR DEVELOPER'S PROJECTS.
2. EMWD SHALL INSPECT ANY AND ALL DOMESTIC, FIRE, OR RECYCLED MAINLINES PRIOR TO BACKFILLING. PROVIDE A MINIMUM OF 48 HOURS NOTICE TO ASSIGNED EMWD RECYCLED WATER ONSITE INSPECTOR PRIOR TO BACKFILLING. FAILURE TO COMPLY WILL RESULT IN ADDED REQUIREMENTS AS DIRECTED BY EMWD'S RECYCLED WATER ONSITE INSPECTOR. THIS INCLUDES, BUT NOT LIMITED TO, EXPOSING ALL MAINLINE AND APPURTENANCES.
3. HOSE BIBS ARE STRICTLY PROHIBITED ON RECYCLED WATER IRRIGATION SYSTEMS. POTABLE QUICK COUPLERS ARE NOT ALLOWED WITHIN THE RECYCLED WATER IRRIGATION AREA.

COLOR CODING NOTES
4. ALL IRRIGATION EMISSION DEVICES, SUCH AS SPRAY HEADS, ROTORS, BUBBLERS, DRIP EMITTERS, OR DRIP ASSEMBLIES SHALL BE IDENTIFIED WITH PURPLE IDENTIFICATION BODIES, COLLARS, CAPS, CONNECTORS, ADAPTERS, ETC. TO PERMANENTLY LABEL THE COMPONENTS AS EMITTING RECYCLED IRRIGATION WATER. THE PURPLE IDENTIFICATION SHALL BE EXPOSED TO THE SURFACE.
5. ALL IRRIGATION RISERS, DRIP LINE, AND COMPONENTS THAT ARE NOT AVAILABLE FROM THE MANUFACTURE WITH PURPLE RECYCLED WATER IDENTIFICATION SHALL BE LABELED WITH RECYCLED WATER DECALS OR STICKERS.
6. ALL IRRIGATION COMPONENTS AND VALVES MUST HAVE A RECYCLED WATER ID TAG AND A VALVE ID TAG IN A PURPLE VALVE BOX WITH A PURPLE LID. THE PURPLE LID SHALL BE HEAT BRANDED WITH THE VALVE LABEL.

RECYCLED WATER AND POTABLE WATER SEPARATION CLEARANCE NOTE
THE RECYCLED WATER IRRIGATION MAINLINE IS SHOWN DIAGRAMMATICALLY FOR CLARITY PURPOSES ONLY. THE RECYCLED WATER IRRIGATION MAINLINE MUST;

7. BE INSTALLED WITH A 4' (FOOT) MINIMUM HORIZONTAL CLEARANCE FROM ALL POTABLE WATERLINES AND FIRE LINES.
8. BE INSTALLED WITH A 1' (FOOT) OF VERTICAL CLEARANCE AND BE LOCATED UNDER ALL POTABLE WATERLINES AND FIRE LINES.
9. WHERE THE RECYCLED WATER IRRIGATION MAINLINES MUST BE INSTALLED ABOVE THE POTABLE WATERLINE, A 4" (INCH) MINIMUM VERTICAL CLEARANCE MUST BE MAINTAINED AND THE RECYCLED WATER IRRIGATION MAINLINE MUST BE INSTALLED IN A CONTINUOUS SLEEVE (PVC CLASS 200 PIPE MINIMUM) WHICH EXTENDS A MINIMUM OF 10' (FEET) EACH SIDE OF THE POTABLE WATERLINE OR FIRE LINE.

I AGREE TO COMPLY WITH THE CRITERIA OF ORDINANCE (MMC 15.04) AND TO APPLY THEM FOR THE EFFICIENT USE OF WATER IN THE IRRIGATION DESIGN PLAN.

Vincent DiDonato — 4-13-26
APPLICANT/ LANDSCAPE ARCHITECT — DATE

PRIOR TO BACKFILLING THE PARTY RESPONSIBLE FOR IRRIGATION INSTALLATION SHALL CONDUCT A PRELIMINARY FIELD INSPECTION OF THE IRRIGATION SYSTEM.

AFTER PROJECT INSTALLATION AN AUDIT SHALL BE CONDUCTED BY A CERTIFIED IRRIGATION AUDITOR AND FINDINGS STATED IN A REPORT.

DIG ALERT
Call: TOLL FREE 1-800-227-2600 OR 811
TWO FULL WORKING DAYS BEFORE YOU DIG

BENCH MARK
DESCRIPTON: _____
LOCATION: _____
VERTICAL DATUM: _____
HORIZONTAL DATUM: _____

ALHAMBRA GROUP
LANDSCAPE ARCHITECTURE
California license #2017
RECREATION FACILITIES PLANNING
41635 Enterprise Circle North, Suite C
TEMECULA, CA 92590 (951) 296-6802
CELL PHONE (951) 970-6156
EMAIL vince@alhambragroup.net

REGISTERED LANDSCAPE ARCHITECT — VINCENT DI DONATO — 2017 — Vincent DiDonato — 4-13-26 — 9-30-27 EXP. — STATE OF CALIFORNIA

DATE: 4-13-26
DRAWN BY: VD
CHECKED BY: VD

REVISIONS					
DATE	BY	MARK	DESCRIPTION	APPR.	DATE
ENGINEER				EMWD	

ACCEPTED BY:
EASTERN MUNICIPAL WATER DISTRICT
WATER RESOURCES & FACILITIES PLANNING — DATE

DEPARTMENT	ACCEPTANCE	DATE
PLAN CHECKER		
OPERATIONS		
DC ENGINEER		

CITY OF PERRIS

SOUTH PERRIS FIRE STATION
WATER USE IMPROVEMENTS
RWIP

IRRIGATION CALCULATIONS AND NOTES

DOPP. | RWIP:
COORD. 30-D | RWUE: 16832
I.D. 98 | RWUP:
S.A. 35 | SHT. 4 OF 11
D-

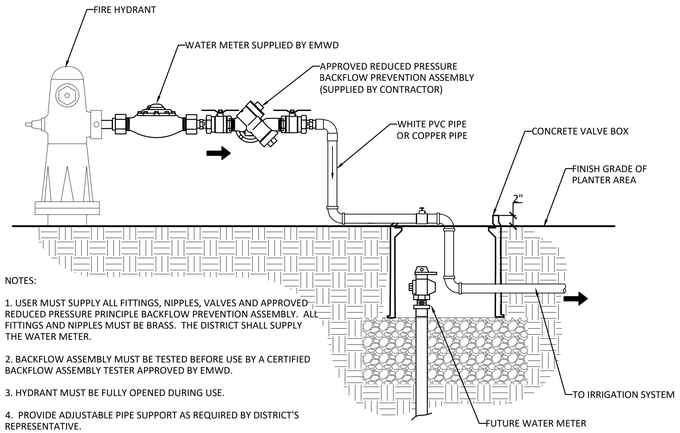

NOTES:

1. USER MUST SUPPLY ALL FITTINGS, NIPPLES, VALVES AND APPROVED REDUCED PRESSURE PRINCIPLE BACKFLOW PREVENTION ASSEMBLY. ALL FITTINGS AND NIPPLES MUST BE BRASS. THE DISTRICT SHALL SUPPLY THE WATER METER.

2. BACKFLOW ASSEMBLY MUST BE TESTED BEFORE USE BY A CERTIFIED BACKFLOW ASSEMBLY TESTER APPROVED BY EMWD.

3. HYDRANT MUST BE FULLY OPENED DURING USE.

4. PROVIDE ADJUSTABLE PIPE SUPPORT AS REQUIRED BY DISTRICT'S REPRESENTATIVE.

5. PRESSURE REGULATOR, IF NEEDED SHALL BE INSTALLED DOWNSTREAM OF BACKFLOW PREVENTER ASSEMBLY, USE COPPER PIPE.

REVISIONS					
DATE	BY	MARK	DESCRIPTION	APPR.	DATE

EASTERN MUNICIPAL WATER DISTRICT

TEMPORARY POTABLE WATER CONSTRUCTION 'T-METER'	A-001
APPROVED: _____ DATE: _____	
DATE PREPARED: 10-22-10	SCALE: 1" = 1'-0"

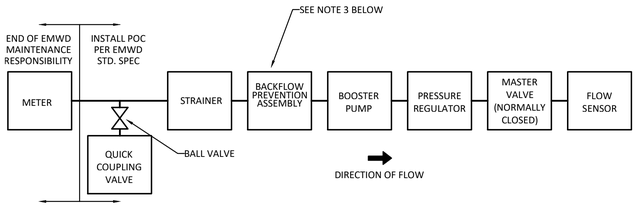

NOTES:

1. STRAINER SHALL BE AT LEAST THE SAME NOMINAL SIZE AS THE METER SIZE.

2. BACKFLOW PREVENTER SHALL BE THE SAME NOMINAL SIZE AS THE METER SIZE.

3. DOUBLE CHECK BACKFLOW PREVENTER REQUIRED ON USER SITES USING A FERTIGATION / CHEMIGATION SYSTEM OR AS REQUIRED BY THE DISTRICT. A REDUCED PRESSURE BACKFLOW PREVENTER IS REQUIRED ON TEMPORARY POTABLE SYSTEMS PER DETAIL B-597.

4. STRAINER AND BACKFLOW PREVENTER SHALL BE LOCATED ABOVE GROUND IN A PROTECTED ENCLOSURE.

5. BOOSTER PUMP, IF REQUIRED, NEEDS TO HAVE A LOW FLOW/PRESSURE SWITCH.

6. MAINLINE SHALL BE BRASS THROUGH TO THE MASTER VALVE.

REVISIONS					
DATE	BY	MARK	DESCRIPTION	APPR.	DATE

EASTERN MUNICIPAL WATER DISTRICT

RECYCLED WATER POC SEQUENCE	A-002
APPROVED: _____ DATE: _____	
DATE PREPARED: 10-22-10	SCALE: 1" = 1'-0"

RECYCLED WATER MAINLINE BELOW POTABLE MAINLINE

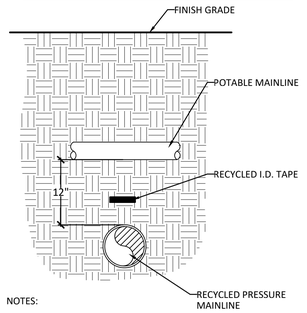

NOTES:

1. SEPARATION BETWEEN POTABLE AND RECYCLED MAINLINE SHALL MEET THE LATEST REQUIREMENTS OF CDPH REGULATORY CRITERIA FOR THE SEPARATION OF WATER MAINS AND NON-POTABLE PIPELINES. CURRENTLY 4' HORIZONTAL AND 1' VERTICAL IS REQUIRED.
2. THE MINIMUM CLEARANCE BETWEEN THE POTABLE AND RECYCLED PIPELINE IS 4". SLEEVING OF THE RECYCLED MAIN IS REQUIRED FOR SEPARATION LESS THAN 12".
3. SLEEVING SHALL EXTEND TEN (10) FEET EACH SIDE FROM THE CENTERLINE OF THE POTABLE LINE. FOR A TOTAL LENGTH OF TWENTY (20) FEET. THE SLEEVE SHALL BE PURPLE PCV CL 200 AND TWICE THE DIAMETER OF THE RECYCLED MAINLINE.

RECYCLED WATER MAINLINE ABOVE POTABLE MAINLINE

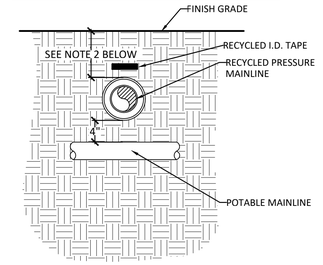

NOTES:

1. SEPARATION BETWEEN POTABLE AND RECYCLED MAINLINE SHALL MEET THE LATEST REQUIREMENTS OF CDPH REGULATORY CRITERIA FOR THE SEPARATION OF WATER MAINS AND NON-POTABLE PIPELINES. CURRENTLY 4' HORIZONTAL AND 1' VERTICAL IS REQUIRED.
2. THE MINIMUM COVER ABOVE THE MAINLINE SHALL BE PER EMWD STANDARD SPEC AND MET AT ALL TIMES.
3. SLEEVING SHALL EXTEND TEN (10) FEET EACH SIDE FROM THE CENTERLINE OF THE POTABLE LINE. FOR A TOTAL LENGTH OF TWENTY (20) FEET. THE SLEEVE SHALL BE PURPLE PCV CL 200 AND TWICE THE DIAMETER OF THE RECYCLED MAINLINE.

REVISIONS					
DATE	BY	MARK	DESCRIPTION	APPR.	DATE

EASTERN MUNICIPAL WATER DISTRICT

RECYCLED / POTABLE PIPE CROSSING	A-003
APPROVED: _____ DATE: _____	
DATE PREPARED: 10-22-10	SCALE: 1" = 1'-0"

EMWD STANDARD NOTE

CONSTRUCTION NOTE
EASTERN MUNICIPAL WATER DISTRICT REQUIRES THAT A PRE-CONSTRUCTION CONFERENCE BE SCHEDULED PRIOR TO ANY CONSTRUCTION (**INCLUDING DOMESTIC AND FIRE MAINLINE**S) BY CALLING EASTERN MUNICIPAL WATER DISTRICT RECYCLED WATER PROGRAM COORDINATOR AT (951) 928-3777, EXTENSION 4412.

INSTALLATION NOTES

1. THE RECYCLED WATER IRRIGATION SYSTEM SHOWN ON THESE PLANS SHALL BE CONSTRUCTED IN ACCORDANCE WITH THE MOST RECENT EDITION OF THE EASTERN MUNICIPAL WATER DISTRICT STANDARDS AND SPECIFICATIONS FOR DEVELOPER'S PROJECTS.
2. EMWD SHALL INSPECT ANY AND ALL DOMESTIC, FIRE, OR RECYCLED MAINLINES PRIOR TO BACKFILLING. PROVIDE A MINIMUM OF 48 HOURS NOTICE TO ASSIGNED EMWD RECYCLED WATER ONSITE INSPECTOR PRIOR TO BACKFILLING. FAILURE TO COMPLY WILL RESULT IN ADDED REQUIREMENTS AS DIRECTED BY EMWD'S RECYCLED WATER ONSITE INSPECTOR. THIS INCLUDES, BUT NOT LIMITED TO, EXPOSING ALL MAINLINE AND APPURTENANCES.
3. HOSE BIBS ARE STRICTLY PROHIBITED ON RECYCLED WATER IRRIGATION SYSTEMS. POTABLE QUICK COUPLERS ARE NOT ALLOWED WITHIN THE RECYCLED WATER IRRIGATION AREA.

COLOR CODING NOTES

4. ALL IRRIGATION EMISSION DEVICES, SUCH AS SPRAY HEADS, ROTORS, BUBBLERS, DRIP EMITTERS, OR DRIP ASSEMBLIES SHALL BE IDENTIFIED WITH PURPLE IDENTIFICATION BODIES, COLLARS, CAPS, CONNECTORS, ADAPTERS, ETC. TO PERMANENTLY LABEL THE COMPONENTS AS EMITTING RECYCLED IRRIGATION WATER. THE PURPLE IDENTIFICATION SHALL BE EXPOSED TO THE SURFACE.
5. ALL IRRIGATION RISERS, DRIP LINE, AND COMPONENTS THAT ARE NOT AVAILABLE FROM THE MANUFACTURE WITH PURPLE RECYCLED WATER IDENTIFICATION SHALL BE LABELED WITH RECYCLED WATER DECALS OR STICKERS.
6. ALL IRRIGATION COMPONENTS AND VALVES MUST HAVE A RECYCLED WATER ID TAG AND A VALVE ID TAG IN A PURPLE VALVE BOX WITH A PURPLE LID. THE PURPLE LID SHALL BE HEAT BRANDED WITH THE VALVE LABEL.

RECYCLED WATER AND POTABLE WATER SEPARATION CLEARANCE NOTE
THE RECYCLED WATER IRRIGATION MAINLINE IS SHOWN DIAGRAMMATICALLY FOR CLARITY PURPOSES ONLY. THE RECYCLED WATER IRRIGATION MAINLINE MUST;

7. BE INSTALLED WITH A 4' (FOOT) MINIMUM HORIZONTAL CLEARANCE FROM ALL POTABLE WATERLINES AND FIRE LINES.
8. BE INSTALLED WITH A 1' (FOOT) OF VERTICAL CLEARANCE AND BE LOCATED UNDER ALL POTABLE WATERLINES AND FIRE LINES.
9. WHERE THE RECYCLED WATER IRRIGATION MAINLINES MUST BE INSTALLED ABOVE THE POTABLE WATERLINE, A 4" (INCH) MINIMUM VERTICAL CLEARANCE MUST BE MAINTAINED AND THE RECYCLED WATER IRRIGATION MAINLINE MUST BE INSTALLED IN A CONTINUOUS SLEEVE (PVC CLASS 200 PIPE MINIMUM) WHICH EXTENDS A MINIMUM OF 10' (FEET) EACH SIDE OF THE POTABLE WATERLINE OR FIRE LINE.

DIMENSION	A	B	C
1/2" - 2 1/2"	24"	12"	6"
3" - 4"	24"		6"
6"	36"		6"

NOTE:
1. WHEN RECYCLED WATER IRRIGATION MAINLINE IS INSTALLED WITHIN A SLEEVE UNDER HARDSCAPE, SLEEVING SHALL BE PVC SCHEDULE 40 PURPLE PIPE WITH DETECTABLE MARKING TAPE PER THE RECYCLED WATER IRRIGATION GUIDELINES.

REVISIONS					
DATE	BY	MARK	DESCRIPTION	APPR.	DATE

EASTERN MUNICIPAL WATER DISTRICT

PIPE TRENCH	A-004
APPROVED: _____ DATE: _____	
DATE PREPARED: 10-22-10	SCALE: 1" = 1'-0"

NOTE: COMPONENT SHOWN IS A SAMPLE. EACH STRAINER TYPE SHALL BE DETAILED TO MEET MANUFACTURER SPECS.

REVISIONS					
DATE	BY	MARK	DESCRIPTION	APPR.	DATE

EASTERN MUNICIPAL WATER DISTRICT

STRAINER	A-005
APPROVED: EXAMPLE DATE: _____	
DATE PREPARED: 10-22-10	SCALE: 1" = 1'-0"

NOTES:

1. INSTALL VALVE BOX EXTENSIONS AS REQUIRED TO ACHIEVE PROPER VALVE INSTALLATION AT MAIN LINE DEPTH.

2. INSTALL CHRISTY RECYCLED ID TAGS ON ALL RECYCLED IRRIGATION SYSTEMS.

3. VALVE BOX LID SHALL BE PURPLE FOR RECYCLED WATER IRRIGATION SYSTEMS

4. QUICK COUPLERS SHALL BE OF A TYPE APPROVED FOR RECYCLED WATER USE.

REVISIONS					
DATE	BY	MARK	DESCRIPTION	APPR.	DATE

EASTERN MUNICIPAL WATER DISTRICT

QUICK COUPLING VALVE	A-007
APPROVED: _____ DATE: _____	
DATE PREPARED: 10-22-10	SCALE: 1" = 1'-0"

DIG ALERT
Call: TOLL FREE 1-800-227-2600 OR 811
TWO FULL WORKING DAYS BEFORE YOU DIG

BENCH MARK
DESCRIPTON: _____
LOCATION: _____
VERTICAL DATUM: _____
HORIZONTAL DATUM: _____

ALHAMBRA GROUP
LANDSCAPE ARCHITECTURE
California license #2017
RECREATION FACILITIES PLANNING
41635 Enterprise Circle North, Suite C
TEMECULA, CA 92590 (951) 296-6802
CELL PHONE (951) 970-6156
EMAIL vince@alhambragroup.net

REGISTERED LANDSCAPE ARCHITECT VINCENT DI DONATO 2517 STATE OF CALIFORNIA 4-13-26 9-30-27 EXP.

DATE: 4-13-26
DRAWN BY: VD
CHECKED BY: VD

REVISIONS					
DATE	BY	MARK	DESCRIPTION	APPR.	DATE
ENGINEER			EMWD		

ACCEPTED BY:
EASTERN MUNICIPAL WATER DISTRICT
WATER RESOURCES & FACILITIES PLANNING DATE

DEPARTMENT	ACCEPTANCE	DATE
PLAN CHECKER		
OPERATIONS		
DC ENGINEER		

CITY OF PERRIS

SOUTH PERRIS FIRE STATION
WATER USE IMPROVEMENTS
RWIP
IRRIGATION DETAILS

	RWIP:
DOPP.	RWUE: 16832
COORD. 30-D	RWUP:
I.D. 98	SHT. 5 OF 11
S.A. 35	D-

CITY OF PERRIS
DEVELOPMENT SERVICES DEPARTMENT
PLANNING DIVISION
135 NORTH D STREEET, PERRIS, CA 92570-2200
(951) 943-5003

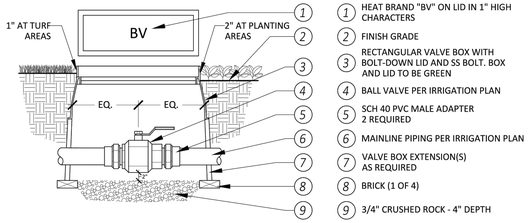

LEGEND:

1. HEAT BRAND "BV" ON LID IN 1" HIGH CHARACTERS
2. FINISH GRADE
3. RECTANGULAR VALVE BOX WITH BOLT-DOWN LID AND SS BOLT. BOX AND LID TO BE GREEN
4. BALL VALVE PER IRRIGATION PLAN
5. SCH 40 PVC MALE ADAPTER 2 REQUIRED
6. MAINLINE PIPING PER IRRIGATION PLAN
7. VALVE BOX EXTENSION(S) AS REQUIRED
8. BRICK (1 OF 4)
9. 3/4" CRUSHED ROCK - 4" DEPTH

NOTES:
1. USE TEFLON TAPE ON ALL MALE PIPE THREADS
2. CENTER VALVE IN BOX TO INSURE FULL SWING OF HANDLE

N.T.S.

BALL VALVE

I-1

DATE: 08/12/24

IRRIGATION DETAIL

CITY OF PERRIS
DEVELOPMENT SERVICES DEPARTMENT
PLANNING DIVISION
135 NORTH D STREEET, PERRIS, CA 92570-2200
(951) 943-5003

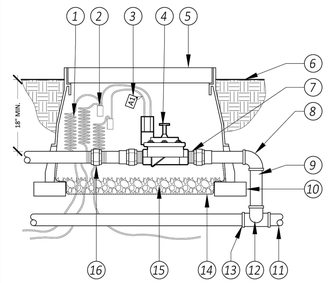

LEGEND:

1. 30" LINEAR LENGTH OF WIRE, COILED
2. WATERPROOF CONNECTION
3. ID TAG: RAIN BIRD VID SERIES OR EQUAL
4. REMOTE CONTROL VALVE
5. VALVE BOX WITH COVER
6. TOP OF MULCH BELOW TOP OF COVER 1/2" FOR TURF & 1" FOR GROUND COVER
7. PVC SCH 80 NIPPLE
8. PVC SCH 40 ELL
9. PVC SCH 80 NIPPLE (LENGTH AS REQUIRED)
10. BRICK (1 OF 4)
11. PVC MAINLINE PIPE
12. SCH 40 NIPPLE (2" LENGTH, HIDDEN) AND SCH 40 ELL
13. PVC SCH 40 TEE OR ELL
14. 1/4" HARDWARE CLOTH TO PROTECT FROM BURROWING PESTS
15. 3" MIN. DEPTH OF 3/4" WASHED GRAVEL
16. PVC UNION (SIZE AS REQUIRED)

NOTES:
1. TEE OFF MAINLINE TO BE SAME SIZE AS LATERAL LINE EXITING VALVE. ONLY REDUCE PIPE SIZE AT VALVE
2. FOR RECLAIMED WATER USE PURPLE VALVE BOX COVER, PIPE, ET. AL
3. INCLUDE ADDITIONAL EXTENSION AS NEEDED, SAME BRAND AS VALVE BOX

N.T.S.

REMOTE CONTROL VALVE

I-2

DATE: 08/12/24

IRRIGATION DETAIL

NOTE: INSTALL A UNION ON THE DOWNSTREAM SIDE OF THE R.C.V.

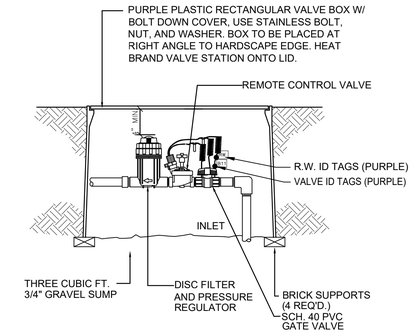

4 / I-6 DRIP REMOTE CONTROL VALVE

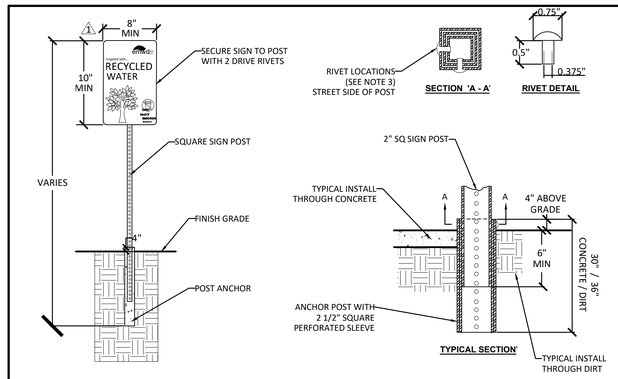

NOTES:

1. SQUARE POST SHALL BE PERFORATED STEEL TUBE POSTS WITH TWO PIECE ANCHOR AND 'TELESPAR' SLEEVE. THE ANCHOR AND SLEEVE ASSEMBLY SHALL CONSIST OF A 2 1/2" SQUARE BY (30" THROUGH SIDEWALK) OR (36" THROUGH SOIL), ANCHOR WITH A 2 1/4" BY 18" SLEEVE.
2. THE NUMBER OF SIGNS, THEIR LOCATIONS, AND HEIGHTS SHALL BE PER EMWD REQUIREMENTS AND AS DIRECTED BY THE DISTRICT REPRESENTATIVE. AT A MINIMUM SIGNS SHALL BE LOCATED AT ALL PROJECT ENTRIES AND AT EACH METER CONNECTION.
3. ANCHOR AND SLEEVE ASSEMBLIES SHALL BE DRIVEN SIMULTANEOUSLY UNTIL 4" REMAINS ABOVE GROUND LEVEL. INSTALL THE 2" GALVANIZED SQUARE SIGN POST MINIMUM 6" INTO THE ANCHOR ASSEMBLY AND SECURE IN PLACE WITH TWO 3/8" DRIVE RIVETS AS SHOWN. THE RIVETS SHALL BE INSTALLED ON THE SIDE FACING TRAFFIC FLOW AND THE SIDE OF APPROACHING TRAFFIC AS SHOWN.
4. ANCHOR ASSEMBLY SHALL NEVER BE SECURED IN CONCRETE FOOTING
5. ADVISORY SIGN CAN BE PURCHASED FROM EMWD AT (951) 928-3777 EXT. 4412

REVISIONS					
DATE	BY	MARK	DESCRIPTION	APPR.	DATE
10/7/19	GS	1	ADDED MINIMUM SIGN SIZE	AGA	10/7/19

EASTERN MUNICIPAL WATER DISTRICT

RECYCLED WATER IRRIGATION ADVISORY SIGN — A-008

APPROVED: _____ DATE: _____

DATE PREPARED: 10-22-10 — SCALE: 1" = 1'-0"

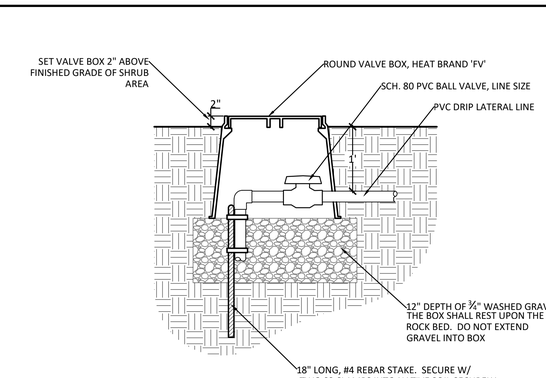

NOTES:

1. INSTALL VALVE BOX EXTENSIONS AS REQUIRED TO ACHIEVE PROPER VALVE INSTALLATION AT MAIN LINE DEPTH.

2. INSTALL CHRISTY RECYCLED ID TAGS ON ALL RECYCLED IRRIGATION SYSTEMS.

3. VALVE BOX AND LID SHALL BE PURPLE FOR RECYCLED WATER IRRIGATION SYSTEMS

REVISIONS					
DATE	BY	MARK	DESCRIPTION	APPR.	DATE

EASTERN MUNICIPAL WATER DISTRICT

MANUAL FLUSH VALVE — A-009

APPROVED: _____ DATE: _____

DATE PREPARED: 10-22-10 — SCALE: 1" = 1'-0"

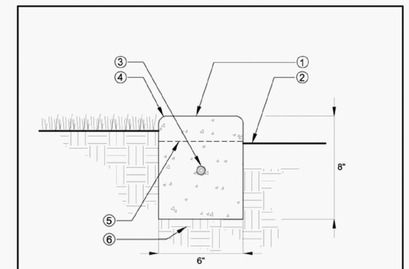

1. MOW CURB WITH MEDIUM BROOM FINISH
2. FINISH GRADE - REFER TO NOTE # C
3. # 3 REBAR CONTINUOUS WITH 18-INCH LAPS MIN.
4. 1/2-INCH RADIUS TOOLED EDGES
5. CONTROL JOINT - REFER TO NOTE A BELOW
6. 90% COMPACTED SUBGRADE

SECTION
NO SCALE

NOTES:
A. WEAKENED PLANE JOINT - 10 FEET O.C. MAXIMUM. CUT CONCRETE WITH TROWEL EDGE TO DEPTH OF REBAR. TOOL, FINISH JOINT USING GROOVER WITH 1.5-INCH DEEP BIT.
B. ISOLATION / EXPANSION JOINT - PLACE AT ENDS OF MOW CURB ABUTTING OTHER IMPROVEMENTS (TYP.).
C. FINISH GRADE SHALL BE 1-INCH IN LAWN AREAS AND 3 INCHES IN PLANTING AREAS (BELOW TOP OF MOW CURB).
D. CONCRETE SHALL BE CLASS 560-C-3250

APPROVED BY:
4/24/15
DIRECTOR OF PUBLIC WORKS / CITY ENGINEER — DATE
JONATHAN GEORGE SMITH

REVISION	BY	APPROVED	DATE
1	C.H.	J.S.	08/15/18

'CITY OF MENIFEE'

CONCRETE MOW CURB

STANDARD PLAN NO. 1302 — SHEET 1 OF 1

DIG ALERT

CALL BEFORE YOU DIG

Call: TOLL FREE
1-800-227-2600
OR
811

TWO FULL WORKING DAYS BEFORE YOU DIG

BENCH MARK
DESCRIPTON: _____
LOCATION: _____
VERTICAL DATUM: _____
HORIZONTAL DATUM: _____

ALHAMBRA GROUP
LANDSCAPE ARCHITECTURE
California license #2017
RECREATION FACILITIES PLANNING
41635 Enterprise Circle North, Suite C
TEMECULA, CA 92590 (951) 296-6802
CELL PHONE (951) 970-6156
EMAIL vince@alhambragroup.net

REGISTERED LANDSCAPE ARCHITECT — VINCENT D. DONATO — 4-13-26 — 9-30-27 EXP. — STATE OF CALIFORNIA

DATE: 4-13-26
DRAWN BY: VD
CHECKED BY: VD

REVISIONS					
DATE	BY	MARK	DESCRIPTION	APPR.	DATE
	ENGINEER			EMWD	

ACCEPTED BY:
EASTERN MUNICIPAL WATER DISTRICT
WATER RESOURCES & FACILITIES PLANNING — DATE

DEPARTMENT	ACCEPTANCE	DATE
PLAN CHECKER		
OPERATIONS		
DC ENGINEER		

CITY OF PERRIS

SOUTH PERRIS FIRE STATION
WATER USE IMPROVEMENTS
RWIP

IRRIGATION DETAILS

	RWIP:
DOPP.	RWUE: 15897
COORD. 30-D	RWUP:
I.D. 98	SHT. 6 OF 11
S.A. 35	D-

CITY OF PERRIS
DEVELOPMENT SERVICES DEPARTMENT
PLANNING DIVISION
135 NORTH D STREEET, PERRIS, CA 92570-2200
(951) 943-5003

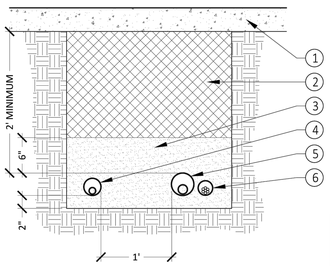

LEGEND:

1. HARDSCAPE (TYPICAL)
2. CLEAN BACKFILL - 90% COMPACTION REQUIRED, SEE SPECS
3. WASHED SAND (TYPICAL)
4. NON-PRESSURE LATERAL LINE/SLEEVE (SIZE PER CHART)
5. PRESSURE SUPPLY LINE/SLEEVE (SIZE PER CHART)
6. CONTROL WIRE SLEEVE ADJACENT TO MAINLINE SLEEVE (SIZE PER CHART)

PRESSURE MAINLINE	LANDSCAPE	<3"	24"
		3"+	36"
	VEHICULAR PAVING	<3"	30"
		3"+	36"
NON PRESSURE LATERAL	LANDSCAPE	<3"	12"
		3"+	18"
	VEHICULAR PAVING	<3"	24"
		3"+	30"

NOTES:
1. SIZE ALL SLEEVES PER SLEEVING CHART ON PLANS. EXTEND SLEEVES 12" BEYOND EDGE OF HARDSCAPE ON BOTH ENDS. RECLAIMED WATER SLEEVES TO BE A MINIMUM OF 42" - 48" DEEP (OR PER WATER DISTRICT STANDARDS) WHERE APPLICABLE.
2. FOR INSTALLATION PRIOR TO PIPING WORK, ADD TO SLEEVE ENDS PVC PIPES EXTENDING VERTICALLY FROM END OF SLEEVE TO BE 18" ABOVE GRADE.
3. AFTER PIPE OR WIRE INSTALLATION, SEAL ANY OPENINGS AT ENDS WITH EXPANDABLE FOAM.

N.T.S.

SLEEVING — I-7

DATE: 08/12/24

IRRIGATION DETAIL

CITY OF PERRIS
DEVELOPMENT SERVICES DEPARTMENT
PLANNING DIVISION
135 NORTH D STREEET, PERRIS, CA 92570-2200
(951) 943-5003

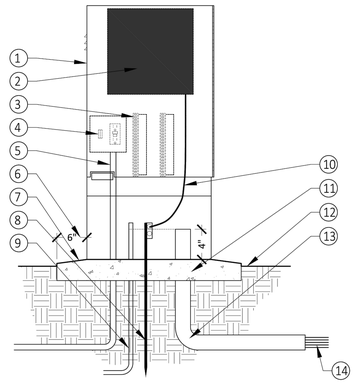

LEGEND:

1. TOP MOUNT STAINLESS STEEL ENCLOSURE
2. WEATHER TRAK ET PRO3
3. TERMINAL STRIPS FOR CONTROL WIRES
4. 120V ON-OFF SWITCH WITH GFI CONVENIENCE OUTLET
5. 120V AC POWER IN CONDUIT
6. EXTEND EDGE OF BASE 6" BEYOND EDGE OF ENCLOSURE
7. SLOPE EDGE OF BASE 1% TO DRAIN AWAY FROM ENCLOSURE
8. 5/8" COPPER GROUNDING ROD LENGTH PER LOCAL CODE OR MANUFACTURER SPECIFICATIONS
9. 2" PVC SWEEP ELL AND CONDUIT FOR FLOW SENSOR CABLE AND MASTER VALVE WIRES
10. GROUND CONTROLLER PER MANUFACTURER
11. 'QUICKPAD' ENCLOSURE MOUNTING PAD PER MFG'S SPECS
12. FINISH GRADE
13. 3" PVC SWEEP ELL - EXTEND 12" BEYOND EDGE OF BASE
14. DIRECT BURIAL CONTROL WIRES TO VALVES

N.T.S.

EXTERIOR CONTROLLER — I-8

DATE: 08/12/24

IRRIGATION DETAIL

CITY OF PERRIS
DEVELOPMENT SERVICES DEPARTMENT
PLANNING DIVISION
135 NORTH D STREEET, PERRIS, CA 92570-2200
(951) 943-5003

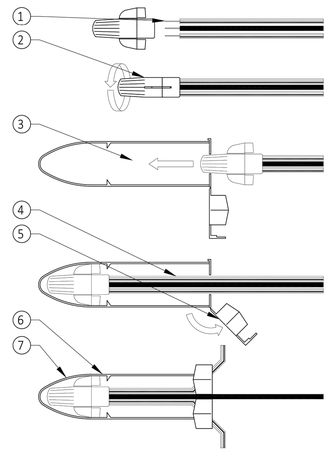

LEGEND:

1. STRIP WIRES APPROX. 3/4" FROM ENDS
2. WITH WIRE ENDS EVEN, INSERT WIRES INTO THE CONNECTOR AND TIGHTEN UNTIL SECURE
3. INSERT THE CONNECTOR ALL THE WAY INTO THE TUBE UNTIL THE CONNECTOR RESTS ON THE BOTTOM
4. FOLD THE WIRE INTO THE CHANNELS
5. CLOSE THE CAP
6. COMPLETED WATERPROOF WIRE CONNECTION
7. CONNECTIONS SHALL BE 3M DBR/Y WIRE CONNECTOR OR APPROVED EQUAL

N.T.S.

2-WIRE SYSTEMS — I-12

DATE: 08/12/24

IRRIGATION DETAIL

CITY OF PERRIS
DEVELOPMENT SERVICES DEPARTMENT
PLANNING DIVISION
135 NORTH D STREEET, PERRIS, CA 92570-2200
(951) 943-5003

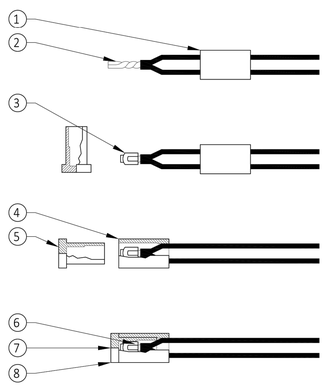

LEGEND:

1. SLIP BASE SOCKET OVER END OF WIRES
2. STRIP WIRES APPROX. 5/8" FROM ENDS - TWIST TOGETHER WITH PLIERS
3. PUT CRIMP END OVER WIRE ENDS - CRIMP SLEEVE AND CUT OFF EXCESS WIRE
4. PULL BASE SOCKET OVER END OF WIRES AS FAR AS POSSIBLE
5. PUSH SEALING PLUG INTO BASE SOCKET
6. PUSH WIRES TO END OF BASE SOCKET TO INSURE COMPLETE SEALING OF CONNECTION
7. COMPLETED WATERPROOF WIRE CONNECTION
8. CONNECTIONS SHALL BE SPEARS DS-100 WIRE CONNECTOR OR APPROVED EQUAL

N.T.S.

CONVENTIONAL COMMON/SIGNAL WIRE — I-12

DATE: 08/12/24

IRRIGATION DETAIL

CITY OF PERRIS
DEVELOPMENT SERVICES DEPARTMENT
PLANNING DIVISION
135 NORTH D STREEET, PERRIS, CA 92570-2200
(951) 943-5003

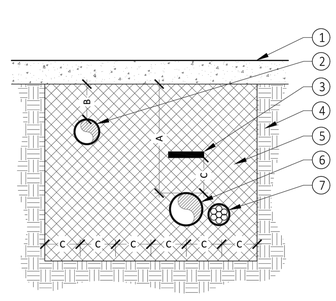

LEGEND:

1. FINISH GRADE
2. LATERAL LINES, SEE SPECS
3. 3" WIDE I.D. TAPE, SEE SPECS FOR TYPE
4. UNDISTURBED NATIVE SOIL
5. CLEAN BACKFILL - 90% COMPACTION REQUIRED, SEE SPECS
6. PRESSURE MAINLINE
7. CONTROL WIRE

DIMENSION	A	B	C
1/2" - 2 1/2"	18"	12"	6"
3" - 4"	24"		6"
6"	36"		6"

NOTES:
1. ALL PIPE UNDER PAVING SHALL BE INSTALLED IN A PURPLE PVC CL 200 SLEEVE TWICE THE DIAMETER OF THE CARRIER PIPE AND LOCATED AT A DEPTH OF 36" TO TOP OF SLEEVE.

N.T.S.

TRENCHING — I-13

DATE: 08/12/24

IRRIGATION DETAIL

CITY OF PERRIS
DEVELOPMENT SERVICES DEPARTMENT
PLANNING DIVISION
135 NORTH D STREEET, PERRIS, CA 92570-2200
(951) 943-5003

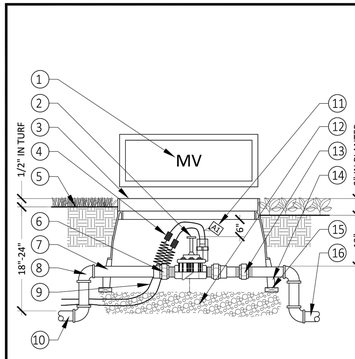

LEGEND:

1. HEAT BRAND "MV" ON LID IN 2" HIGH CHARACTERS
2. ELECTRIC CONTROL VALVE PER LEGEND
3. JUMBO RECTANGULAR VALVE BOX WITH BOLT-DOWN LID AND SS BOLT. LID AND BOX TO BE GREEN
4. WATERPROOF WIRE CONNECTION W/36" EXPANSION LOOP
5. FINISH GRADE
6. PVC SCH 40 MALE ADAPTER
7. PVC MAINLINE PER LEGEND - LENGTH AS REQUIRED
8. PVC SCH 40 ELL - SxS
9. UF WIRES TO CONTROLLER MASTER VALVE OUTPUT. GAUGE PER LEGEND
10. MAINLINE PIPING FROM POINT OF CONNECTION
11. ID TAG: RAIN BIRD VID SERIES OR EQUAL
12. 3/4" CRUSHED ROCK - 6" DEEP
13. PVC SCH 80 UNION - SIZE AS REQUIRED
14. VALVE BOX EXTENSION(S) AS REQUIRED. USE SAME BRAND AS VALVE BOX
15. COMMON BRICK - 4 REQUIRED
16. MAINLINE PIPING TO CONTROL VALVES

N.T.S.

MASTER VALVE — I-18

DATE: 08/12/24

IRRIGATION DETAIL

CITY OF PERRIS
DEVELOPMENT SERVICES DEPARTMENT
PLANNING DIVISION
135 NORTH D STREEET, PERRIS, CA 92570-2200
(951) 943-5003

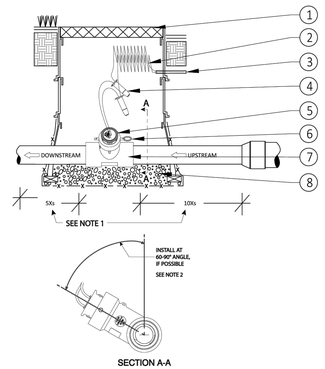

LEGEND:

1. PLASTIC VALVE BOX TO PROVIDE ACCESS
2. DIRECT BURIAL 1 PAIR, TWISTED SHIELDED CABLE. RECOMMENDED MINIMUM CONDUCTOR SIZE 18 AWG. RATED FOR DISTANCES UP TO 2,000 FT. ENSURE A SERVICE LOOP (EXTRA WIRE LENGTH) IS PROVIDED AT THE FLOW SENSOR IN CASE MAINTENANCE IS NEEDED.
3. CABLE ENROUTE TO IRRIGATION CONTROLLER VIA CONDUIT
4. 3M DBR/Y-6 SPLICE KIT OR EQUIVALENT DIRECT BURIAL SPLICE KIT
5. ULTRASONIC FLOW SENSOR PER LEGEND
6. QUICK RELEASE PIN
7. TEE COMPATIBLE WITH FLOW SENSOR. SELECT TEE SIZE PER APPLICATION FLOW RATES REQUIRED (SEE DATA SHEET)
8. GRAVEL SHALL BE PLACED AT BOTTOM OF TEE AND SHALL BE A MIN. OF 10" DEEP.

NOTES:
1. 5Xs MEANS 5 TIMES PIPE'S INNER DIAMETER AND 10Xs MEANS 10 TIMES PIPE'S INNER DIAMETER
2. FOR 1-INCH THRU 4-INCH PIPE INSTALLATIONS, THIS ANGLE IS ESPECIALLY IMPORTANT AND SHOULD BE SET AT 60-90 DEGREES FOR MOST ACCURATE OPERATION

N.T.S.

FLOW SENSOR — I-19

DATE: 08/12/24

IRRIGATION DETAIL

DIG ALERT

Call: TOLL FREE
1-800-227-2600
OR
811

TWO FULL WORKING DAYS BEFORE YOU DIG

BENCH MARK

DESCRIPTON: _____

LOCATION: _____

VERTICAL DATUM: _____

HORIZONTAL DATUM: _____

ALHAMBRA GROUP
LANDSCAPE ARCHITECTURE
California license #2017
RECREATION FACILITIES PLANNING
41635 Enterprise Circle North, Suite C
TEMECULA, CA 92590 (951) 296-6802
CELL PHONE (951) 970-6156
EMAIL vince@alhambragroup.net

REGISTERED LANDSCAPE ARCHITECT — VINCENT DI DONATO — 4-13-26 — 9-30-27 EXP — STATE OF CALIFORNIA

DATE: 4-13-26
DRAWN BY: VD
CHECKED BY: VD

REVISIONS

DATE	BY	MARK	DESCRIPTION	APPR.	DATE
			ENGINEER	EMWD	

ACCEPTED BY:
EASTERN MUNICIPAL WATER DISTRICT
WATER RESOURCES & FACILITIES PLANNING — DATE

DEPARTMENT	ACCEPTANCE	DATE
PLAN CHECKER		
OPERATIONS		
DC ENGINEER		

CITY OF PERRIS

SOUTH PERRIS FIRE STATION
WATER USE IMPROVEMENTS
RWIP
IRRIGATION DETAILS

	RWIP:
DOPP.	RWUE: 16832
COORD. 30-D	RWUP:
I.D. 98	SHT. 7 OF 11
S.A. 35	D-

CITY OF PERRIS
DEVELOPMENT SERVICES DEPARTMENT
PLANNING DIVISION
135 NORTH D STREEET, PERRIS, CA 92570-2200
(951) 943-5003

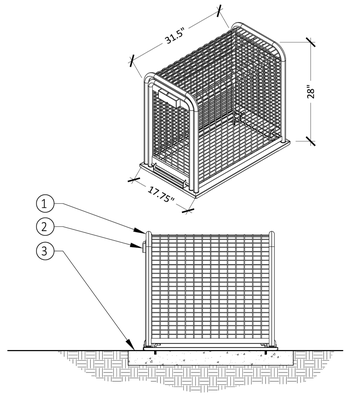

LEGEND:
1. STRONG BOX SBBC-30SS OR EQUAL
2. HASP FOR PADLOCK
3. CONCRETE PAD

NOTES:
1. FINISH TO BE TWO COATS OF SEMI-GLOSS GREEN ENAMEL PAINT
2. STAINLESS STEEL REQUIRED FOR ALL LANDSCAPE MAINTENANCE DISTRICT AREAS
3. CONTRACTOR TO REQUEST LOCK FROM CITY INSPECTOR

N.T.S.

BACKFLOW PREVENTION ENCLOSURE

I-21

DATE: 08/12/24

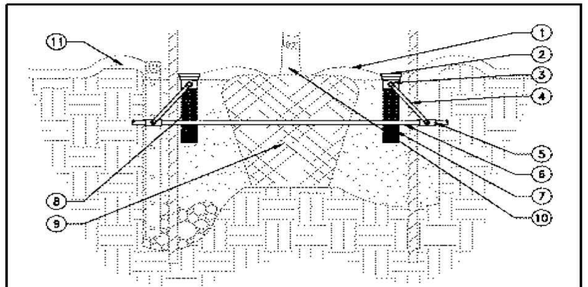

1. FINISH GRADE/ TOP OF MULCH
2. ROOT WATERING SYSTEM WITH PURPLE GRATE PER IRRIGATION LEGEND
3. 1/2" SPIRAL BARB FITTING (INCLUDED)
4. 1/2" SWING ASSEMBLY: RAIN BIRD SA125050
5. PVC SCH. 40 TEE (SXSXT) OR ELL (SXT) NON-PRESSURE PURPLE LATERAL PIPE, PER PLAN
6. OPTIONAL SOCK (RWS-SOCK) FOR SANDY SOILS
7. 4" DIA. X 18" LONG RIGID BASKET WEAVE CANISTER (INCLUDED)
8. PLANT ROOTBALL
9. TREE PLANTING PER DETAIL
10. TREE WATERING BERM PER PLANTING DETAIL

NOTES:
1. POSITION 2 UNITS (FOR TREES 24' - 36" BOX) EVENLY SPACED DIRECTLY ACROSS FROM EACH OTHER ON OPPOSITE SIDES OF TREE TRUNK NEAR ROOTBALL FOR NEWLY INSTALLED TREES.
2. INSTALL PRODUCT WITH TOP FLUSH WITH FINISHED GRADE OR TOP OF MULCH
3. WHEN INSTALLING IN EXTREMELY HARD OR CLAY SOILS, ADD 3/4" GRAVEL UNDER AND AROUND THE UNIT TO ALLOW FOR FASTER WATER INFILTRATION AND ROOT PENETRATION
4. ONCE THE RWS-M HAS BEEN INSTALLED FILL THE BASKET WITH PEA GRAVEL BEFORE LOCKING LID

8 | *(RECYCLED) ROOT WATERING SYSTEM* | N.T.S. | P-22-01250-328403-0.5

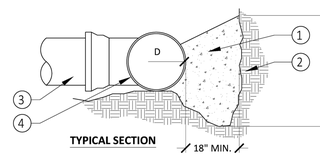

TYPICAL SECTION

LEGEND:
1. THRUST BLOCK
2. UNDISTURBED NATIVE SOIL
3. WATER MAIN
4. FITTING

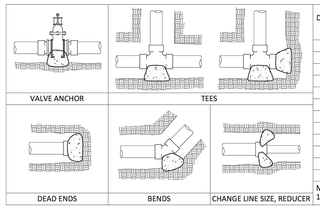

DIAMETER OF PIPE D (INCHES)	MINIMUM BEARING SURFACE (sf)				
	BENDS				TEES AND DEAD ENDS
	11 1/4°	22 1/2°	45°	90°	
4	1	4	4	4	4
6	1	4	4	4	4
8	2	4	4	4	4
10	3	4	4	4	4
12	4	4	4	4	4
14	5	4	4	4	4
16	7	4	4	4	4
18	9	4	4	4	4
20	11	4	4	4	4
24	15	4	4	4	4
30	24	4	4	4	4
36	34	4	4	4	4
MINIMUM SURFACE AREA BASED ON WATER PRESSURE OF 150 PSI AND ALLOWABLE SOIL PRESSURE OF 1,000 PSI					

NOTES:
1. EXTEND THRUST BLOCKS TO UNDISTURBED SOIL. EXCAVATION INTO TRENCH WALL MAY BE NECESSARY.
2. FROM VERTICAL SURFACES OF POURED CONCRETE THRUST BLOCKS EXCEPT ON BEARING SURFACE.
3. ENCASE ALL FITTINGS IN POLYETHYLENE WRAP. DO NOT ALLOW CONCRETE TO DIRECTLY CONTACT JOINTS, FITTING AND/OR BOLTS.
4. ADD #4 MIN. REBAR ANCHORS AS NEEDED. FIELD BEND TO WRAP AROUND EQUIPMENT.

THRUST BLOCKS

I-28

DATE: 08/12/24

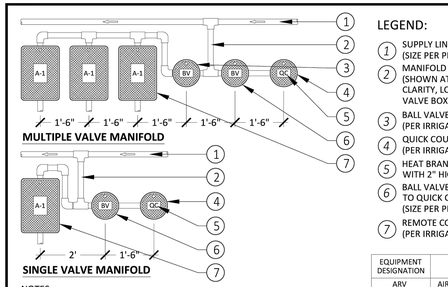

LEGEND:
1. SUPPLY LINE (SIZE PER PLAN)
2. MANIFOLD PIPE (SIZE PER PLAN) (SHOWN AT SIDE FOR GRAPHIC CLARITY, LOCATE UNDERNEATH VALVE BOXES)
3. BALL VALVES TO MANIFOLD (PER IRRIGATION LEGEND)
4. QUICK COUPLER (PER IRRIGATION LEGEND)
5. HEAT BRAND ALL VALVE BOXES WITH 2" HIGH CHARACTERS
6. BALL VALVE AND SUPPLY LINE TO QUICK COUPLER (SIZE PER PLAN)
7. REMOTE CONTROL VALVE (PER IRRIGATION PLAN)

EQUIPMENT DESIGNATION	IDENTIFICATION GUIDE
ARV	AIR RELIEF VALVE
BS	BASKET STRAINER
BV	BALL VALVE
CCC	COMMUNICATION SPLICES
FS	FLOW SENSOR
FVA	FLUSH VALVE ASSEMBLY
GR	GROUNDING RODS
GV	GATE VALVE
MS	MOISTURE SENSOR
MV	MASTER VALVE
PB	PULL BOX
(STA NO.)	REMOTE CONTROL VALVES
QC	QUICK COUPLERS
CONTACT LANDSCAPE ARCHITECT FOR INFO ON ANY DEVICE IN A BOX NOT LISTED.	

NOTES:
1. CONTROL VALVES SHALL BE INSTALLED TO ALLOW ORDERLY ARRANGEMENT OF VALVE BOXES.
2. WHERE POSSIBLE, LOCATE VALVE MANIFOLDS IN SHRUB OR GROUNDCOVER AREAS ONLY 12" FROM HARDSCAPE.
3. LOCATION OF VALVE MANIFOLDS SHALL BE STAKED FOR APPROVAL BY LANDSCAPE ARCHITECT PRIOR TO INSTALLATION.
4. CENTER VALVE BOXES OVER VALVE MANIFOLDS TO FACILITATE ACCESS AND MAINTENANCE.
5. SET VALVE BOXES AT EQUAL ELEVATIONS W/ TOPS 2" ABOVE FINISH GRADE IN SHRUB/GROUNDCOVER AREAS.
6. VALVE BOXES SHALL BE SET PARALLEL TO EACH AND PERPENDICULAR TO EDGE OF AREA.
7. DO NOT DEFORM OR COLLAPSE VALVE BOX BY EXCESSIVE SOIL COMPACTION AROUND BOX.
8. SEE ALSO INDIVIDUAL VALVE INSTALLATION DETAILS.

BOX IDENTIFICATION

I-29

DATE: 08/12/24

IRRIGATION DETAIL

CITY OF PERRIS
DEVELOPMENT SERVICES DEPARTMENT
PLANNING DIVISION
135 NORTH D STREEET, PERRIS, CA 92570-2200
(951) 943-5003

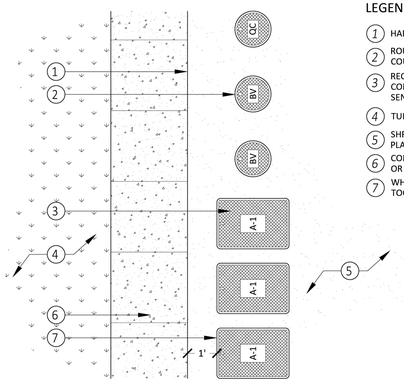

LEGEND:
1. HARDSCAPE EDGE PER PLAN
2. ROUND BOX FOR QUICK COUPLERS, GATE OR BALL VALVES
3. RECTANGULAR VALVE BOX FOR CONTROL VALVES, FLOW SENSORS, MASTER VALVES
4. TURF PLANTING AREA
5. SHRUB AND GROUNDCOVER PLANTING AREA
6. CONCRETE WALK, PATHWAY OR FLATWORK PER PLAN
7. WHEN POSSIBLE GROUP VALVES TOGETHER PER DIAGRAM

NOTES:
1. VALVE BOXES SHALL BE AT A UNIFORM DISTANCE AND PARALLEL TO THE HARDSCAPE, PLACED ADJACENT TO WALK OR FLATWORK.

VALVE BOX PLACEMENT

I-31

DATE: 08/12/24

IRRIGATION DETAIL

CITY OF PERRIS
DEVELOPMENT SERVICES DEPARTMENT
PLANNING DIVISION
135 NORTH D STREEET, PERRIS, CA 92570-2200
(951) 943-5003

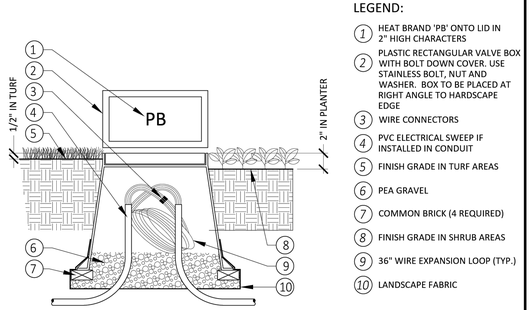

LEGEND:
1. HEAT BRAND 'PB' ONTO LID IN 2" HIGH CHARACTERS
2. PLASTIC RECTANGULAR VALVE BOX WITH BOLT DOWN COVER. USE STAINLESS BOLT, NUT AND WASHER. BOX TO BE PLACED AT RIGHT ANGLE TO HARDSCAPE EDGE
3. WIRE CONNECTORS
4. PVC ELECTRICAL SWEEP IF INSTALLED IN CONDUIT
5. FINISH GRADE IN TURF AREAS
6. PEA GRAVEL
7. COMMON BRICK (4 REQUIRED)
8. FINISH GRADE IN SHRUB AREAS
9. 36" WIRE EXPANSION LOOP (TYP.)
10. LANDSCAPE FABRIC

NOTES:
1. ELECTRICAL SWEEPS NOT REQUIRED FOR DIRECT BURIAL INSTALLATION.
2. OPEN ENDS OF ELECTRICAL SWEEPS TO BE SEALED USING APPROVED AEROSOL FOAM PRODUCT.

PULL BOX

I-34

DATE: 08/12/24

IRRIGATION DETAIL

CITY OF PERRIS
DEVELOPMENT SERVICES DEPARTMENT
PLANNING DIVISION
135 NORTH D STREEET, PERRIS, CA 92570-2200
(951) 943-5003

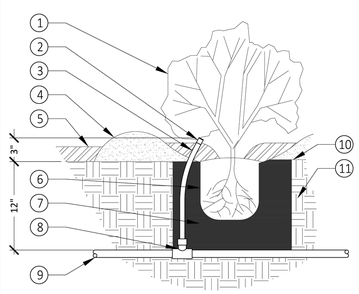

LEGEND:
1. SHRUB OR GROUNDCOVER PER PLANTING PLAN
2. DRIP EMITTER PER IRRIGATION EQUIPMENT LEGEND
3. 1/2" x 12" FLEXIBLE RISER TUBING WITH MALE ADAPTERS AT EACH END PER IRRIGATION EQUIPMENT LEGEND
4. WATERING BASIN PER SHRUB PLANTING DETAIL
5. MULCH PER SHRUB PLANTING DETAIL
6. PLANT ROOTBALL
7. COMPACTED BACKFILL PER SPECIFICATIONS
8. SCH. 40 PVC TEE (SXSXT) OR ELL (SXT)
9. NON-PRESSURE LATERAL LINE - SIZE AND TYPE PER PLAN
10. FINISH GRADE
11. UNDISTURBED NATIVE SOIL

NOTES:
1. ALL THREADED FITTINGS MUST HAVE TEFLON TAPE.
2. INSTALL DRIP EMITTER INSIDE PLANT WATERING BASIN DIRECTLY ADJACENT TO ROOTBALL.

N.T.S.

EMITTER ON FLEXIBLE RISER

I-38

DATE: 08/12/24

IRRIGATION DETAIL

CITY OF PERRIS
DEVELOPMENT SERVICES DEPARTMENT
PLANNING DIVISION
135 NORTH D STREEET, PERRIS, CA 92570-2200
(951) 943-5003

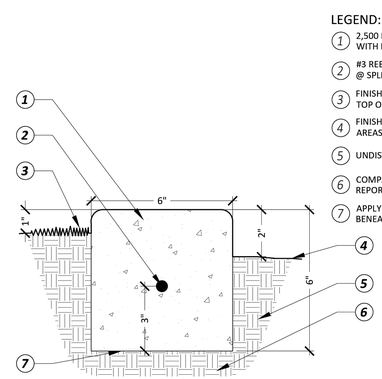

LEGEND:
1. 2,500 PSI NATURAL GREY CONCRETE WITH LIGHT BROOM FINISH.
2. #3 REBAR - CONTINUOUS LAP BARS 8" @ SPLICES AND TIE (>20'-0" LENGTH)
3. FINISH GRADE PER PLAN (1" BELOW TOP OF CURB)
4. FINISH GRADE IN GROUNDCOVER AREAS (2" BELOW TOP OF CURB).
5. UNDISTURBED NATIVE SOIL
6. COMPACTED SUBGRADE PER SOILS REPORT
7. APPLY PRE-EMERGENT HERBICIDE BENEATH MOW STRIP.

NOTES:
1. INSTALL 1/2" PREFORMED EXPANSION JOINTS @ 20' O.C. AND AT BEGINNING/END OF RADIUS
2. PROVIDE 1" DP x 1/8" THICK TOOLED CONTROL JOINT @ 10' O.C.

SCALE: 1"=3"

CONCRETE MOWCURB

L-4

DATE: 08/12/24

IRRIGATION DETAIL | IRRIGATION DETAIL | IRRIGATION DETAIL | LANDSCAPING DETAIL

DIG ALERT
Call: TOLL FREE
1-800-227-2600
OR
811
TWO FULL WORKING DAYS BEFORE YOU DIG

BENCH MARK
DESCRIPTION:
LOCATION:
VERTICAL DATUM:
HORIZONTAL DATUM:

ALHAMBRA GROUP
LANDSCAPE ARCHITECTURE
California license #2017
RECREATION FACILITIES PLANNING
41635 Enterprise Circle North, Suite C
TEMECULA, CA 92590 (951) 296-6802
CELL PHONE (951) 970-6156
EMAIL vince@alhambragroup.net

REGISTERED LANDSCAPE ARCHITECT VINCENT DI DONATO 2017 — Vincent DiDonato — 4-13-26 — 9-30-27 EXP. — STATE OF CALIFORNIA

DATE: 4-13-26
DRAWN BY: VD
CHECKED BY: VD

REVISIONS					
DATE	BY	MARK	DESCRIPTION	APPR.	DATE
ENGINEER				EMWD	

ACCEPTED BY:
EASTERN MUNICIPAL WATER DISTRICT
WATER RESOURCES & FACILITIES PLANNING — DATE

DEPARTMENT	ACCEPTANCE	DATE
PLAN CHECKER		
OPERATIONS		
DC ENGINEER		

CITY OF PERRIS

SOUTH PERRIS FIRE STATION
WATER USE IMPROVEMENTS
RWIP
IRRIGATION DETAILS

	RWIP:
DOPP.	RWUE: 16832
COORD. 30-D	RWUP:
I.D. 98	SHT. 8 OF 11
S.A. 35	D-

IRRIGATION SPECIFICATIONS

1. INTENT - TO INDICATE AND SPECIFY A COMPLETE AND EFFICIENT SPRINKLER IRRIGATION SYSTEM, READY FOR USE, WITH ALL WORK AND MATERIAL CONFORMING TO GOVERNING CODES.

2. ALL DIMENSIONS AND LOCATIONS SHOWN ARE DIAGRAM SITE CONDITIONS AND SHALL BE VERIFIED BEFORE INITIATING WORK.

3. ALL WORK SHALL BE INSTALLED IN THE MOST DIRECT AND WORKMANLIKE MANNER WITHOUT INTERFERING WITH EXISTING OR PROPOSED PLANTING OR OTHER WORK AND UTILITY LINES.

4. IRRIGATION MATERIALS

   VALVE BOXES: PLASTIC BOXES SIZES AS REQUIRED.

   PLASTIC PIPING: ALL PRESSURE PIPE, SCHEDULE 40 PVC SOLVENT WELD TYPE, OR BETTER. NON-PRESSURE PIPE, CLASS 200 PVC SOLVENT WELD TYPE, OR BETTER.

   PLASTIC FITTINGS: TYPE I, SCHEDULE 80 PVC.

   POLYETHYLENE: MOLDED, 85 P.S.I.

   BALL VALVES: PLASTIC BODIED, 125 P.S.I. MINIMUM, HEAVY DUTY TYPE, FEDERAL SPEC, CROSS HANDLE.

   DRIP EMITTERS: OF MODEL AND TYPE SHOWN ON PLANS.

   CONTROL WIRE: DIRECT BURIAL, UL APPROVED; WHITE FOR COMMON, BLACK FOR CONTROL; 12 GAUGE MINIMUM SIZE COMMON, 14 GAUGE MINIMUM SIZE CONTROL WIRE. 2-WIRE SYSTEM

   QUICK COUPLING VALVES: SINGLE LUG, TWO PIECE; PER LEGEND.

   EXTRA STOCK: SUPPLY OWNER WITH VALVE KEYS, EXTRA EMITTERS, TWO QUICK COUPLING HOSE BIBS, AND MANUALS FOR EQUIPMENT USED.

5. EXCAVATION

   TRENCHES SHALL BE CUT TO FOLLOWING REQUIRED GRADES: PRESSURE PIPE AT (24") MIN. COVER; ALL NON-PRESSURE PIPE @ (12") MIN. COVER; EXCEPT BLU-LOCK @ (2") MIN. COVER.

6. PIPE FITTING AND LAYOUT

   JOIN AND INSTALL PIPING IN STRICT ACCORDANCE WITH MANU-FACTURER'S INSTALLATION GUIDE. INSTALL LINES AWAY FROM FIXED IMPROVEMENTS AND ALONG EDGE OF PLANTING AREAS.

7. EQUIPMENT AND INSTALLATION

   SET ALL EQUIPMENT TRUE, PLUMB, SECURE, AND ACCESSIBLE FOR OPERATION AND SERVICING PER MANUFACTURER'S RECOMMENDATIONS AND PER DETAILS SHOWN.

8. BACKFILLING

   MATERIAL: SUITABLE FILL SOIL FREE OF LARGE ROCKS AND CLODS.

   BACKFILL: TRENCHES SHALL BE COMPACTED TO AT LEAST 85% OF THE MAX. RELATIVE DENSITY AS DETERMINED BY THE ASTM D-1557 EXCEPT BACKFILL IN TRENCHES LOCATED UNDER A.C. PAVED AREAS AND/OR ANY TRAFFIC AREAS IN WHICH CASE TRENCHES SHALL BE COMPACTED TO 90%. BACKFILL SHALL BE SUBJECT TO TESTING BY THE SOILS ENGINEER.

   SETTLING: PROPERLY WETTED AND TAMPED TO A FIRM FINISH GRADE WITH NO FUTURE SETTLING.

9. TESTING AND ADJUSTING

   PRESSURE TEST: PRESSURE LINES AT 150 P.S.I. FOR 2 HOURS AND NON-PRESSURE LINES AT EXISTING STATIC LINE PRESSURE FOR 2 HOURS. LINES SHALL BE WATERTIGHT WITH NO LEAKAGE.

   COVERAGE TEST: ADJUST AND POSITION EMITTERS EMITTERS FOR COMPLETE COVERAGE OF ALL PLANTING AREAS.

10. RECORD PRINTS

    MAINTAIN A SET OF PRINTS DELINEATING AND DIMENSIONING LOCATIONS AND DEPTHS OF ALL PRESSURE PIPING, VALVES, AND GATE VALVES AS WORK IS COMPLETED. RECORD PRINTS SHALL REMAIN ON THE JOB SITE THROUGHOUT CONSTRUCTION. A LEGIBLE REDUCED LAMINATED SET SHALL BE PREPARED AND SUBMITTED TO THE OWNER PRIOR TO FINAL ACCEPTANCE.

EMWD SPECIFICATION DISCLAIMER

1. THE LANDSCAPE ARCHITECT ASSUMES RESPONSIBILITY FOR ALL INFORMATION ON THIS SHEET. EMWD DOES NOT REVIEW OR ACCEPT THIS INFORMATION. EMWD'S SIGNATURE ON THIS SHEET IS TO COMPLETE THE IRRIGATION PACKAGE FOR INFORMATIONAL PURPOSES ONLY.

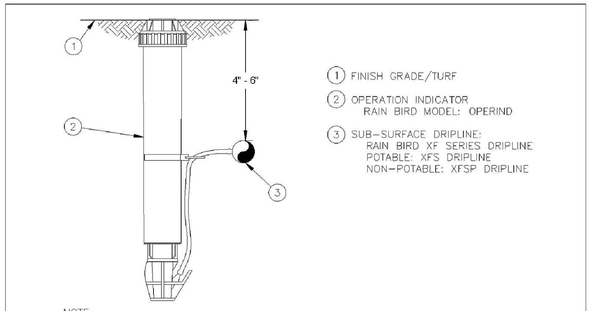

NOTE:
1. INSERT BARB TRANSFER FITTING DIRECTLY INTO DRIPLINE TUBING.
2. VAN NOZZLE MAY BE SET TO CLOSED, OR IF IT IS DESIRED TO SEE SPRAY FROM THE NOZZLE, SET THE ARC TO ¼ PATTERN. THE FLOW FROM THE NOZZLE, 0.3 GPM, SHOULD BE ACCOUNTED FOR IN THE SYSTEM DESIGN.

D XFS SUB-SURFACE DRIPLINE OPERATION INDICATOR
N.T.S. 12-18-2012

XFS Sub-Surface Dripline Operation Indicator

DIG ALERT
DIG BEFORE YOU DIG
Call: TOLL FREE
1-800-227-2600
OR
811
TWO FULL WORKING DAYS BEFORE YOU DIG

BENCH MARK
DESCRIPTON: _____
LOCATION: _____
VERTICAL DATUM: _____
HORIZONTAL DATUM: _____

ALHAMBRA GROUP
LANDSCAPE ARCHITECTURE
California license #2017
RECREATION FACILITIES PLANNING
41635 Enterprise Circle North, Suite C
TEMECULA, CA 92590 (951) 296-6802
CELL PHONE (951) 970-6156
EMAIL vince@alhambragroup.net

REGISTERED LANDSCAPE ARCHITECT VINCENT DI DONATO 2017 4-13-26 9-30-27 EXP. STATE OF CALIFORNIA

DATE: 4-13-26
DRAWN BY: VD
CHECKED BY: VD

REVISIONS					
DATE	BY	MARK		APPR.	DATE
ENGINEER			DESCRIPTION	EMWD	

ACCEPTED BY:
EASTERN MUNICIPAL WATER DISTRICT
WATER RESOURCES & FACILITIES PLANNING _____ DATE _____

DEPARTMENT	ACCEPTANCE	DATE
PLAN CHECKER		
OPERATIONS		
DC ENGINEER		

CITY OF PERRIS

SOUTH PERRIS FIRE STATION
WATER USE IMPROVEMENTS
RWIP
IRRIGATION SPECIFICATIONS

DOPP.
COORD. 30-D
I.D. 98
S.A. 35

RWIP:
RWUE: 16832
RWUP:
SHT. 9 OF 11
D-

PLANTING NOTES

1. ALL PLANTING SHALL CONFORM TO THE CITY OF PERRIS DEVELOPMENT CODES AND STANDARDS.
2. SOIL TESTING:
   CONTRACTOR SHALL PROVIDE A HORTICULTURAL SOILS ANALYSIS PERFORMED BY A LABORATORY OF THE CALIFORNIA ASSOC. OF AGRICULTURAL LABORATORIES. SOIL ANALYSIS SUBMITTED TO THE CITY SHALL INCLUDE THE FOLLOWING: SOIL TEXTURE, PERCENTAGE OF ORGANIC MATTER, SOIL INFILTRATION RATE (DERIVED FROM SOIL TEXTURE/ INFILTRATION RATE TABLES), PH AND TOTAL SOLUBLE SALTS. CONTRACTOR SHALL ADJUST SOIL AMENDMENT RECOMMENDATIONS USING APPROPRIATE PRODUCTS TO CONFORM TO SOIL ANALYSIS RESULTS AS REQUIRED. TURN OVER RESULTS TO CITY LANDSCAPE ARCHITECT AT PRE-CONSTRUCTION MEETING.
3. CONTRACTOR SHALL ENSURE POSITIVE DRAINAGE OF ALL PLANTING AREAS ON SITE AND SUBSURFACE DRAINAGE FOR ENCLOSED PLANTING AREAS.
4. THE CONTRACTOR SHALL CAREFULLY INSPECT THE SITE AND VERIFY ALL THE CONDITIONS AND DIMENSIONS PRIOR TO PROCEEDING WITH ANY WORK. NOTIFY LANDSCAPE ARCHITECT AND OWNER IF ANY INCONSISTENCIES OCCUR.
5. THE CONTRACTOR SHALL REMOVE ALL WEEDS, ROCKS, DEBRIS AND OTHER EXTRANEOUS MATERIALS FROM THE JOB SITE PRIOR TO PROCEEDING WITH ANY WORK.
6. ALL PLANT MATERIALS SHALL BE HANDLED OR STORED SO THAT THEY ARE ADEQUATELY PROTECTED FROM DRYING OUT, FROM SUN OR WIND BURN, OR FROM ANY OTHER INJURY.
7. THE CONTRACTOR SHALL APPLY TO ALL SHRUB PLANTING AREAS A 3" LAYER OF "FOREST FLOOR" WOOD MULCH, CONTACT PLANT'S CHOICE (619) 585-9909. CONTRACTOR SHALL PROVIDE LANDSCAPE ARCHITECT WITH SAMPLE FOR APPROVAL PRIOR TO INSTALLATION.
8. CONTRACTOR TO VERIFY ALL PLANT QUANTITIES SHOWN ON PLANS.
9. SEE SHEET L-11 FOR DETAILS & SPECIFICATIONS.
10. ALL ABOVE GROUND UTILITIES SHALL BE SCREENED W/ PLANTING. CONTACT CITY LANDSCAPE ARCHITECT REGARDING LOCATIONS.
11. ALL PLANTING SHALL NOT INTERFERE W/ TRAFFIC SITE LINES.
12. CONTRACTOR SHALL TURN OVER SOIL AMENDMENT VERIFICATION TICKETS TO THE CITY INSPECTOR.
13. INSTALL CENTURY/ VILLA ROOT BARRIERS .06" SIZE ADJACENT TO HARDSCAPE & (8) FEET FROM TRUNK EACH SIDE (16' MIN. TOTAL) WHEN TREES ARE PLANTED 6' FROM THE HARDSCAPE TYP.
14. CONTACT THE CITY FOR ALL INSPECTIONS REQUIRED.
15. LANDSCAPE INPROVEMENTS IN OFFSITE AREAS/PUBLIC RIGHTS-OF-WAY SHALL SHALL BE SEPARATED FROM PRIVATELY-MAINTAINED ON SITE LANDSCAPE AREAS WITH A CITY-STANDARD, CONTINUOUS CONCRETE MOW CURB (6"X8"), ALONG THE PROPERTY LINE (ON-SITE)- EXISTING INSTALLED AS PART OF OFF-SITE.

PLANTING LEGEND

SYMBOL	BOTANICAL NAME	COMMON NAME	SIZE	NUMBER	REMARKS (STANDARD TRUNK FOR ALL TREES)	WATER USE
	TREES:					
	LAURUS NOBILIS	BAY LAUREL	24" BOX	28	DOUBLE STAKE/ HEIGHT 8-10' , SPREAD 3'-4' MIN.	L
	CERCIS CANADENSIS 'FOREST PANSY'	EASTERN RED BUD	24" BOX	11	DOUBLE STAKE / HEIGHT 8-10' , SPREAD 3'-4' MIN.	L
	CHITALPA TASHKENTENSIS 'PINK DAWN'	PINK CHITALPA	24" BOX	11	DOUBLE STAKE / HEIGHT 8-10' , SPREAD 3'-4' MIN.	L
	SHRUBS:					
	WESTRINGIA FRUTICOSA 'MUNDI'	PROSTRATE COAST ROSEMARY	1 GAL	772	TRIANGULAR SPACING @ 5' O.C.	L
	HESPERALOE PARVIFLORA	RED YUCCA	5 GAL	31	FULL & BUSHY @ 4' O.C.	L
	LEUCOPHYLLUM FRUTICOSA 'COMPACTA'	COMPACT TEXAS RANGER	5 GAL	94	FULL & BUSHY @ 5' O.C.	L
	DIANELLA 'LITTLE REV'	LITTLE REV FLAX	1 GAL	59	FULL & BUSHY @ 3' O.C.	L
	CALLISTEMON VIMINALIS 'LITTLE JOHN'	DWARF BOTTLE BRUSH	5 GAL	123	FULL & BUSHY @ 3' O.C.	L
	JUNIPERUS HORIZONTALIS	BLUE RUG JUNIPER	1 GAL	72	TRIANGULAR SPACING @ 5' O.C.	L
	CISTUS PULVERULENTUS 'SUNSET'	MAGENTA ROCK ROSE	1 GAL	364	TRIANGULAR SPACING @ 5' O.C.	L
	BASINS:					
	JUNCUS PATENS	CALIFORNIA GRAY RUSH	1 GAL.	7	3' O.C. IN MODULAR WETLAND PLANTABLE AREAS TYP.	L
	MULCH & GROUNDCOVER:					
NOT SHOWN	FOREST BLEND WOOD MULCH	MEDIUM GRIND WOOD MULCH	3" MAX.	AS REQ'D.	3" DEEP - INSTALL TO ALL PLANTING AREAS	

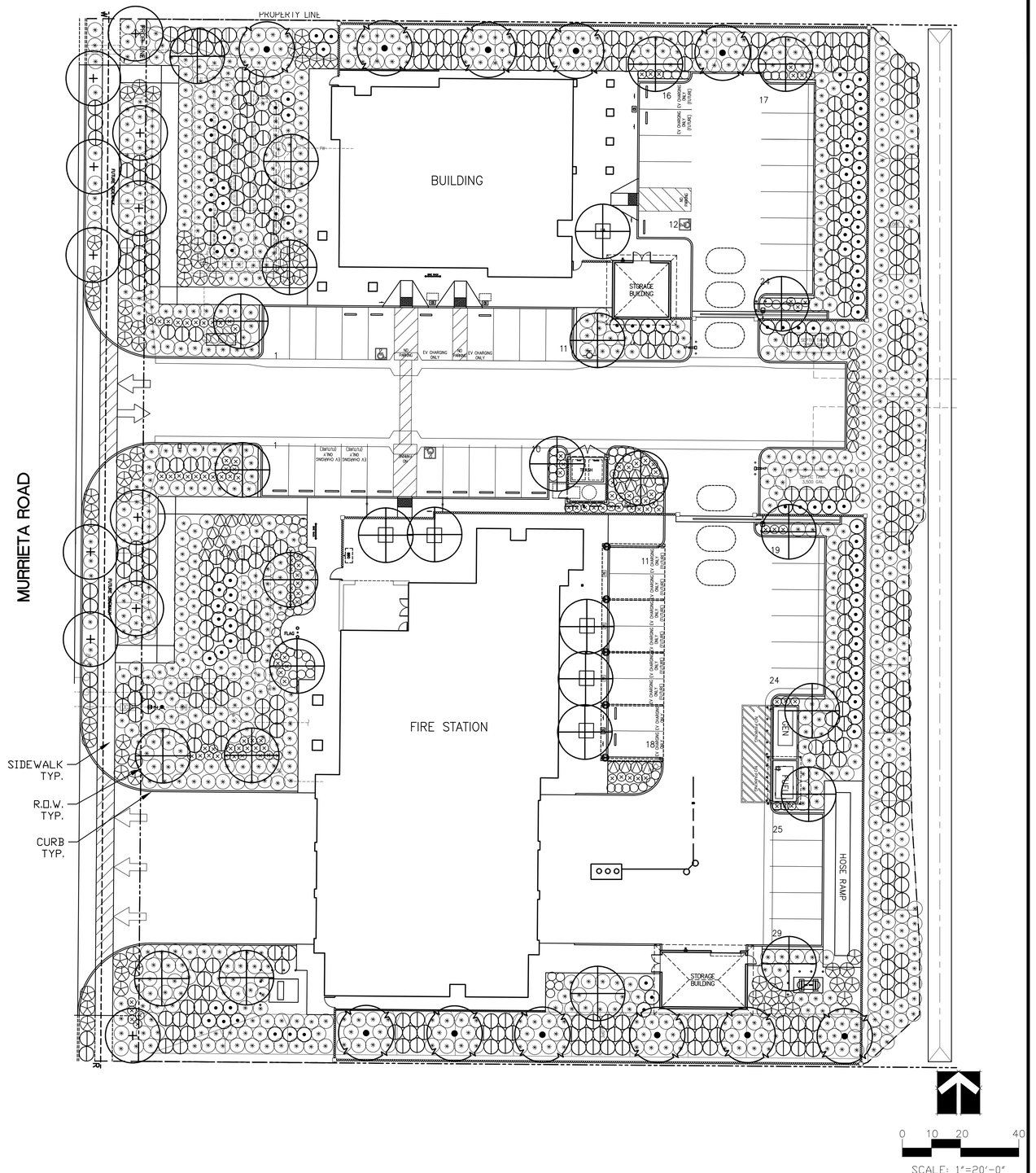

DIG ALERT
DIAL TOLL FREE 811
AT LEAST TWO DAYS BEFORE YOU DIG
UNDERGROUND SERVICE ALERT OF SOUTHERN CALIFORNIA

DATE	BY	MARK	REVISIONS	APPR.	DATE

ENGINEER
DESIGNED BY: DRAWN BY: CHECKED BY:
CITY

ALHAMBRA GROUP
LANDSCAPE ARCHITECTURE
CALIFORNIA LICENSE #2017
RECREATION FACILITIES PLANNING
41635 ENTERPRISE CIRCLE NORTH, SUITE C
TEMECULA, CA 92590 (951) 296-6802

AG25-107

SEAL
REGISTERED LANDSCAPE ARCHITECT
VINCENT DI DONATO
4-13-26
9-30-27
EXP.
STATE OF CALIFORNIA

APPROVED BY: DATE:
CITY ENGINEER

APPROVED BY: DATE:

CITY OF PERRIS
ENGINEERING DEPARTMENT
24 S. D ST. SUITE 100
PERRIS CA 92570
951-956-2120

SCALE: AS SHOWN
DATE:

BENCHMARK:

CITY OF PERRIS, CALIFORNIA
SOUTH PERRIS FIRE STATION
PLANTING PLAN

FOR: CITY OF PERRIS
W.O.

SHEET NO. 10 OF 11 SHEETS
FILE NO.

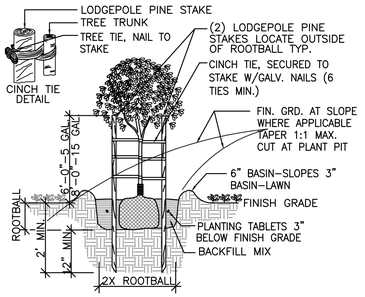

1 / L–11 TREE PLANTING AND STAKING

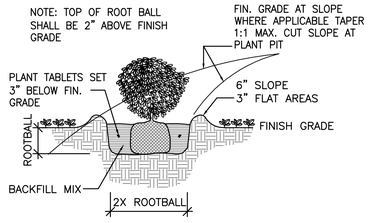

2 / L–11 SHRUB PLANTING

1. TOP OF ROOT CONTROL BARRIER MUST BE AT GRADE.
2. INSTALL BARRIER AS CLOSE TO STRUCTURE AS POSSIBLE.
3. BARRIER CAN BE PLACED AGAINST INSIDE OF FORMS.
4. THE ROOT DEFLECTORS MUST BE FACING TOWARD THE TREE.
5. EXTEND BARRIER A MIN. OF 8" BELOW BOTTOM OF HARDSCAPE.
6. INSTALL ROOT BARRIER 8' FROM TRUNK IN EACH DIRECTION.
7. ALL TREES 6' AND CLOSER TO HARDSCAPE REQUIRE ROOT CONTROL BARRIER.

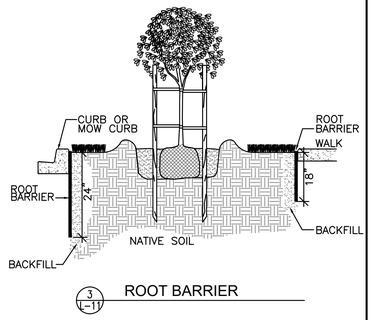

3 / L–11 ROOT BARRIER

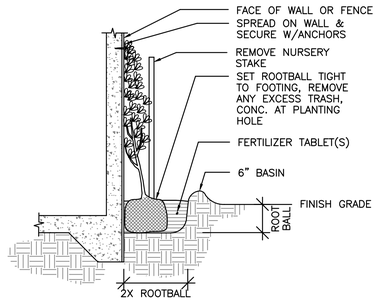

4 / L–11 VINE DETAIL ON FENCE/WALL

SOIL PREPARATION AND PLANTING

1. ALL PLANTING LOCATIONS SHOWN AND MEASUREMENTS SCALED FROM THE DRAWINGS ARE APPROXIMATE. FINAL LOCATIONS TO BE APPROVED BY THE LANDSCAPE ARCHITECT.

2. ALL PLANT MATERIALS SHALL BE PROTECTED FROM EXCESSIVE WIND, SUN, AND ALL OTHER DAMAGE.

3. MATERIALS:

   TOPSOIL: APPROVED CLEAN SANDY LOAM AND/OR LOAM SOIL, OR APPROVED EQUAL.

   SOIL CONDITIONER

   NITROLIZED SHAVINGS, TERRA BLEND OR APPROVED EQUAL.

   GYPSUM: BEN FRANKLIN AGRICULTURAL GYPSUM, OR EQUAL.

   PRE–PLANT FERTILIZER: COMMERCIAL (6–20–20) OR EQUAL.

   POST–PLANT FERTILIZER: COMMERCIAL (16–8–8) OR EQUAL.

   PLANTING TABLETS: AGRIFORM (20–10–5) BLUE CHIP TABLETS.

   PLANTING BACKFILL: TWO (2) PARTS EXCAVATED SOIL BLENDED WITH ONE (1) PART SOIL CONDITIONER.

   MULCH: SHREDDED, CLEAN GROUND FIR OR PINE WOOD MULCH.

   TREE STAKES: TWO INCH (2") BY TEN FOOT (10') LONG SOUND LODGE POLE PINE STAKES, POINTED ONE END ONLY.

   TREE TIES: BLACK VINYL CINCH–TIES BY BORDEN OR EQUAL.

(N.I.C.) TREE GUYS: 12 GAUGE GALVANIZED STRANDED WIRE PER DETAIL.

(N.I.C.) WOOD HEADERS: CONSTRUCTION ALL–HEART REDWOOD, FREE OF KNOTS ON TOP EDGE.

   PLANT MATERIALS: PER THE CALIFORNIA STATE DEPARTMENT OF AGRICULTURE'S REGULATIONS FOR NURSERY INSPECTIONS OF RULES AND GRADING. PLANTS SHALL BE SOUND AND HEALTHY, FREE OF DISEASE AND DEFECTS, WELL DEVELOPED OF SIZE NORMAL FOR CONTAINER SIZE AND NOT ROOT–BOUND. UNSATISFACTORY AND UNDER–SIZED PLANTS WILL BE REJECTED. PROTECT PLANTS AT ALL TIMES ACCORDING TO SPECIES.

   SEEDS: PURE, LIVE SEED OF VARIETIES SPECIFIED, FREE OF WEED SEED; GERMINATION AS SPECIFIED.

4. SOIL PREPARATION AND GRADING

   ROUGH GRADES AND ROCK PLACEMENT: ESTABLISHED BY OTHER SECTIONS.

   SOIL CONDITIONING: THOROUGHLY INCORPORATE THE FOLLOWING INTO THE PLANT BACKFILL MIX TYPICAL.

   SOIL CONDITIONER – PER SOIL TEST
   PRE–PLANT FERTILIZER – PER SOIL TEST
   GYPSUM–PER SOIL TEST
   WETTING AGENT – PER SOIL TEST

   DEEP WATERING: DEEP WATERING LEACH ALL PLANTING AREAS TO EIGHT (8) INCHES MINIMUM DEPTH.

   FINAL GRADING: ENSURE POSITIVE DRAINAGE OF PROJECT AREA WITH ALL AREAS LEFT SMOOTH AND EVEN AND FREE OF ROCKS, CLODS AND DEBRIS. FINISH GRADE SHALL BE ONE INCH (1") BELOW ADJACENT FLATWORK AND CURBS EXCEPT LAWNS SHALL BE FLUSH.

5. PLANTING INSTALLATION

   LAYOUT: PER PLANS WITH FINAL REVIEW AND APPROVAL OF LOCATIONS BY LANDSCAPE ARCHITECT.

   EXCAVATION: PLANTING HOLES SHALL BE AS SHOWN ON DETAILS.

   PLANTING TABLETS: SET THREE INCHES (3") BELOW GRADE:

   1–5 GRAM PER FLAT PLANT AND/OR CUTTING
   1–21 GRAM PER 1 GALLON
   3–21 GRAM PER 5 GALLON
   5–21 GRAM PER 15 GALLON
   1–21 GRAM PER EACH 2 INCH BOX SIZE

   SETTING: SET PLANTS SLIGHTLY HIGHER THAN FINISH GRADE AND THOROUGHLY WATER IN.

   STAKING AND GUYING: TO INSURE SAFETY AND PROPER HEALTH OF TREE. TIE WITH TIES PER DETAILS.

   WATER BASINS: AS REQUIRED TO ADEQUATELY WATER TREES AND SHRUBS.

   LEVELING: ALL PLANTING AREAS SHALL BE LEFT SMOOTH AND EVEN.

   MULCHING: NOTED AREAS SHALL RECEIVE EVEN THREE INCH (3") LAYER OF WOOD MULCH IN ALL PLANTING AREAS EXCEPT FUEL MODIFICATION AREAS WITH NO MULCH TYP.

7. MAINTENANCE

   PLANT MAINTENANCE WORK SHALL CONSIST OF APPLYING WATER (EXCEPT INITIAL WATERING OF PLANTS) WEEDING, CARING FOR PLANTS, AND PERFORMING THE FOLLOWING FINAL PLANT ESTABLISHMENT WORK:

   THE ENTIRE PROJECT TO BE MAINTAINED FOR A PERIOD OF (90) CALENDAR DAYS, COMMENCING FROM THE TIME ALL ITEMS OF WORK HAVE BEEN COMPLETED TO THE SATISFACTION OF THE LANDSCAPE ARCHITECT.
   THE ENTIRE PROJECT SHALL BE CARED FOR SO THAT A NEAT AND DURING THE FINAL (90) CALENDAR DAY PERIOD ALL PLANTS AND PLANTED AREAS SHALL BE KEPT WELL WATERED AND WEED FREE AT ALL TIMES. WEEDS, DALLAS, JOHNSON, AND BERMUDA GRASS SHALL BE REMOVED.

   CLEAN CONDITION WILL BE PRESENTED AT ALL TIMES, TO THE SATISFACTION OF THE LANDSCAPE ARCHITECT.

   CONTRACTOR SHALL MAINTAIN A SUFFICIENT NUMBER OF MEN AND WORKMEN SHALL NOT BE ALLOWED TO WALK ON SHRUB AREAS UNNECESSARILY BEFORE, DURING OR AFTER PLANTING. DAMAGED OR COMPACTED SHRUB AREAS SHALL BE RE–PLANTED AT THE CONTRACTOR'S EXPENSE.

   IN ORDER TO EXPEDITE THE PLANT ESTABLISHMENT WORK, ADEQUATE EQUIPMENT TO PERFORM THE WORK HEREIN SPECIFIED AND FROM THE TIME ANY PLANTING IS DONE UNTIL THE END OF THE FINAL (90) CALENDAR DAY PERIOD.

   THE CONTRACTOR MAY BE RELIEVED FROM MAINTENANCE WORK WHEN THE FINAL (90) CALENDAR DAY MAINTENANCE WORK HAS BEEN SATISFACTORILY COMPLETED TO THE SATISFACTION OF THE LANDSCAPE ARCHITECT.

   DAMAGE TO PLANTING AREAS SHALL BE REPLACED IMMEDIATELY.

   (1) DEPRESSIONS CAUSED BY VEHICLES, BICYCLES, OR FOOT TRAFFIC TO BE FILLED WITH TOPSOILS AND LEVELED. REPLANT DAMAGED AREAS.

   (2) EXTERMINATE GOPHERS AND MOLES AND REPAIR DAMAGE, AS ABOVE.

8. GUARANTEE AND REPLACEMENTS

   ALL SHRUBS AND GROUNDCOVER SHALL BE GUARANTEED BY THE CONTRACTOR AS TO GROWTH AND HEALTH FOR A PERIOD OF SIX MONTHS AFTER COMPLETION OF THE SPECIFIED MAINTENANCE PERIOD AND/OR FINAL ACCEPTANCE BY THE LANDSCAPE ARCHITECT. ALL TREES UP TO 5 GALLON SIZE SHALL BE GUARANTEED BY THE CONTRACTOR TO LIVE AND GROW IN AN ACCEPTABLE UPRIGHT POSITION FOR A PERIOD OF SIX MONTHS AFTER COMPLETION OF THE SPECIFIED MAINTENANCE PERIOD AND/OR FINAL ACCEPTANCE BY THE LANDSCAPE ARCHITECT. TREES IN 15 GALLON, OR LARGER, AND ALL FIELD GROWN SPECIMENS SHALL BE GUARANTEED BY THE CONTRACTOR TO LIVE AND GROW IN AN ACCEPTABLE UPRIGHT POSITION FOR A PERIOD OF ONE YEAR AFTER COMPLETION OF THE SPECIFIED MAINTENANCE PERIOD, AND/OR FINAL ACCEPTANCE BY THE LANDSCAPE ARCHITECT.

9. CLEAN–UP

   UPON COMPLETION OF WORK OF THIS SECTION, REMOVE RUBBISH, TRASH AND DEBRIS RESULTING FROM OPERATION. REMOVE DISUSED EQUIPMENT AND IMPLEMENTS OF SERVICE, AND LEAVE ENTIRE AREA INVOLVED IN A NEAT AND ACCEPTABLE CONDITION SUCH AS TO MEET THE APPROVAL OF THE LANDSCAPE ARCHITECT, WITH ALL PAVING, WALKS AND OTHER CONSTRUCTION WASHED–DOWN AND FREE OF ALL DIRT AND DEBRIS.

SPECIAL CONDITIONS

ALL PROVISIONS OF THE GENERAL CONDITIONS OF THE CONTRACT SHALL APPLY TO THE WORK AS IF HEREIN WRITTEN.

1. ALL EXISTING UTILITY LINES AND IMPROVEMENTS SHALL BE LOCATED PRIOR TO WORK.

2. CONTRACTOR SHALL SECURE AND PAY FOR ALL REQUIRED PERMITS AND FEES TO COMPLETE WORK.

3. CONTRACTOR SHALL BE INSURED FOR LIABILITY AND PROPERTY DAMAGE.

4. CONTRACTOR SHALL ADEQUATELY PROTECT ALL EXISTING PROPERTY.

5. CONTRACTOR SHALL GUARANTEE ALL MATERIALS AND WORKMANSHIP FOR ONE YEAR. (EXCEPT AS NOTED)

6. ALL MATERIALS SHALL BE OF STANDARD, APPROVED, AND FIRST GRADE QUALITY AND SHALL BE IN PRIME CONDITION.

7. WORK SHALL BE PERFORMED WHEN WEATHER CONDITIONS PERMIT SATISFACTORY RESULTS.

8. ALL WORK SHALL BE DONE IN ACCORDANCE WITH APPROVED METHODS AND STANDARDS AS SET FORTH BY THE CALIFORNIA COUNCIL OF LANDSCAPE CONTRACTORS, UNLESS OTHERWISE INDICATED OR SHOWN.

9. ALL WORK SHALL BE IN FULL COMPLIANCE WITH ALL GOVERNING CODES AND REGULATIONS.

10. ALL AREAS SHALL BE LEFT CLEAN, FREE OF DEBRIS AND WASHED DOWN.

11. LANDSCAPE ARCHITECT RETAINS OPTION TO REQUIRE THAT CONTRACTOR RECEIVE A FIELD OBSERVATION OF EACH OPERATION AND MATERIAL PRIOR TO INCORPORATION INTO THE WORK.

12. CONTRACTOR SHALL USE ANY MEANS NECESSARY TO PROTECT ALL PLANTED AREAS FROM FOOT TRAFFIC INCLUDING BUT NOT LIMITED TO STAKES & WARNING TAPE.

DIG ALERT
DIAL TOLL FREE 811
AT LEAST TWO DAYS BEFORE YOU DIG
UNDERGROUND SERVICE ALERT OF SOUTHERN CALIFORNIA

DATE	BY	MARK	REVISIONS	APPR.	DATE

ENGINEER — CITY
DESIGNED BY: DRAWN BY: CHECKED BY:

ALHAMBRA GROUP
LANDSCAPE ARCHITECTURE
CALIFORNIA LICENSE #2017
RECREATION FACILITIES PLANNING
41635 ENTERPRISE CIRCLE NORTH, SUITE C
TEMECULA, CA 92590 (951) 296–6802

AG25–107

SEAL — REGISTERED LANDSCAPE ARCHITECT — VINCENT DI DONATO — 2017 — 4–13–26 — 9–30–27 EXP. — STATE OF CALIFORNIA

APPROVED BY: DATE:
CITY ENGINEER

APPROVED BY: DATE:

CITY OF PERRIS
ENGINEERING DEPARTMENT
24 S. D ST. SUITE 100
PERRIS CA 92570
951–956–2120

SCALE: AS SHOWN
DATE:
BENCHMARK:

CITY OF PERRIS, CALIFORNIA
SOUTH PERRIS FIRE STATION
DETAILS AND SPECS

FOR: CITY OF PERRIS W.O.

SHEET NO. 11 OF 11 SHEETS
FILE NO.

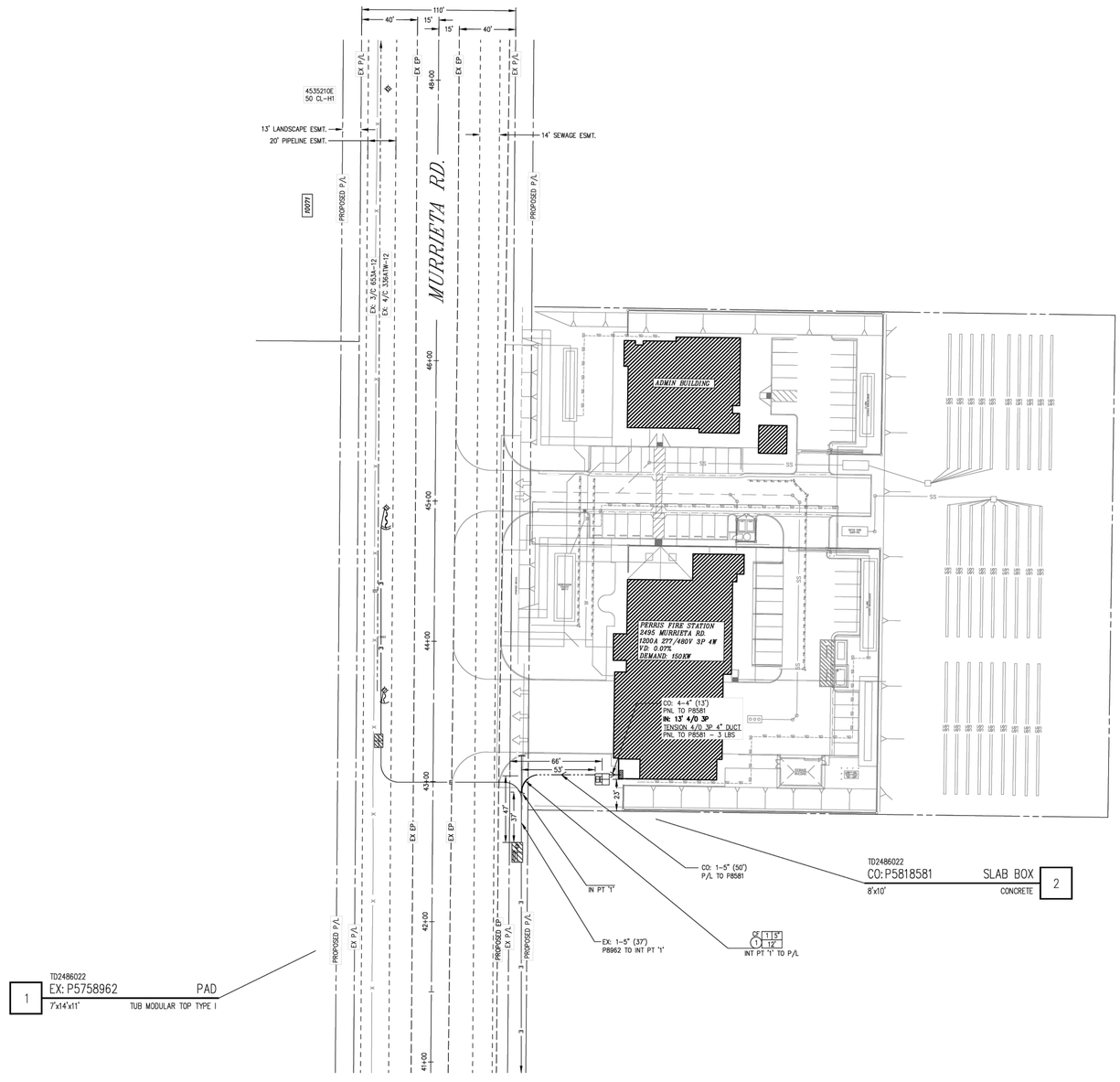

NOTES TO CREW:
- TRUCK ACCESS GOOD
- GPS: 33.752029, -117.20599
- GEOVIEW: MT-8034-D
- MUST BE WORKED WITH OR AFTER TD1796362

NOTES TO CIVIL:
- MANDREL CUSTOMER CONDUIT FROM P5758962 TO P5818581

PROJECT REQUIREMENTS (Y/N)

EDISON EASEMENT REQUIRED	N
PWRD 88 REQUIRED UG	Y
CIVIL ONLY WORK ORDER	N
PERMIT REQUIRED	Y
PERMIT TYPE: ENCROACHMENT	
OUTAGE REQUIRED	Y
OUTAGE DATE: _____ TIME: _____	
TRAFFIC CONTROL REQUIRED	Y
PED. TRAFFIC CONTROL REQ'D	N
CONVEYANCE LETTER REQ'D	N
ENVIRONMENTAL REQUIREMENTS DOCUMENT (ERD) REQUIRED	N
CSD 140 (TLM) REQ'D	Y
CIRCUIT MAP CHANGE REQ'D (TD 203)	Y
DIG ALERT APP	☐
VERIFIED ACTIVE AND CONFIRMED USA TICKETS	☐
UTILIQUEST NOTIFIED	☐
FAA MARKING REQ'D	☐
FAA TYPE: _____	
ACTUAL COST WORK ORDER	N
STANDARD ADHERENCE: 1_Q/_2026	Y

D124: 12/12/24

FINAL DESIGN
APPROVED FOR CONSTRUCTION

UNDERGROUND SERVICE ALERT
Contact USA
Dial 811 or 800-422-4133
www.digalert.org/contact
FOR UNDERGROUND LOCATING TWO WORKING DAYS BEFORE YOU DIG

D16: 03/22/24

SCALE: 1 IN = 40 FT

MURRIETA RD. PUMP STATION
VICINITY MAP NTS
MURRIETA RD
WATSON RD
ETHANAC RD
X JOB SITE

DISTRICT: 77 – MENIFEE		PROJ. MGR.: LINDSEY YOUNG PHONE: (760) 285-3234		PLANNER: LINDSEY YOUNG PHONE: (760) 285-3234	DESIGNER: LINDSEY YOUNG
PROJECT NO.: 3162382	SERVICE REQUEST: 4040449	MSR NO.: 2486022	PRODUCT-1: 2486022–NEW METER & SERVICE		ASSOC DESGN: N/A
CIRCUIT / VOLTAGE: TRUMBLE 12KV		GPS: SEE NOTES	PRODUCT-2: N/A		ASSOC DESGN: N/A
SUB / PQ NO.: VALLEY SUB / B2		CIRCUIT CODE: 1B229	PRODUCT-3: N/A		ASSOC DESGN: N/A
INVENTORY MAP: 576-1704-2		J.P.A. NO.: N/A	PROPOSED CONSTRUCTION (LOCATION): 2SN – COMM/INDUST M&S UG 2495 MURRIETA RD PERRIS CA 92585 UTILITY CONSULTANT: MIRANDA GALLE (909) 890-3700		
TYPE	DATE	APPROVED BY	CHECKED BY	DRAWN BY	PAX #
Southern California Edison Company					SHEET: 1 or 2
					DESIGN\DRWG NO.: 1905167_0.01

STK
42095 ZEVO DR., TEMECULA, CALIFORNIA 92590-3780
Phone: 951.296.9110 Fax: 951.296.6079 Email: stk@stkinc.com

CONSULTANT:

REVIEWED FOR CODE COMPLIANCE

THESE PLANS AND DOCUMENTS HAVE BEEN REVIEWED AND FOUND TO BE IN COMPLIANCE WITH THE CODES AND ORDINANCES OF THIS JURISDICTION. ISSUANCE OF A PERMIT IS RECOMMENDED, SUBJECT TO APPROVAL BY OTHER DEPARTMENTS AND ANY NOTED CONDITIONS. THE ISSUANCE OF A PERMIT BASED ON THESE PLANS AND DOCUMENTS, OR APPROVAL OF ANY VIOLATIONS, SPECIFICALLY STATED, NOR RELIEVE THE OWNER, DESIGN PROFESSIONAL OF RECORD, OR CONTRACTOR OF RESPONSIBILITY FOR COMPLIANCE WITH ALL APPLICABLE CODES. THESE DOCUMENTS DOES NOT AUTHORIZE CONSTRUCTION TO BEGIN NOR IN VIOLATION OF ANY FEDERAL, STATE OR LOCAL REGULATIONS.

BUILDING BUREAU SIGNATURE
REVIEWED BY: STEVEN MA, PE, CASp

THIS SET OF THE PLANS AND SPECIFICATIONS MUST BE KEPT ON THE JOB SITE AT ALL TIMES DURING CONSTRUCTION. ANY CHANGES, ADDITIONS OR ALTERATIONS WITHOUT APPROVAL IS A VIOLATION OF THE LAW. A FEE IS APPLICABLE TO OBTAIN APPROVAL FOR EACH CHANGE. PLANS APPROVAL IS GRANTED BY ALL APPLICABLE DEPARTMENTS.

STRUCTURAL TECHNICAL SOLUTIONS INC.

PROJECT ADMINISTERED BY:
CITY OF PERRIS

101 NORTH "D" STREET
PERRIS, CA 92570

PROJECT NAME:
FIRE STATION 105 AND ADMINISTRATION BUILDING

PROJECT CIP: F077

2495 MURRIETA ROAD
PERRIS, CA 92585

ISSUE INFORMATION:

DATE:	INFORMATION:
11-26-25	95% CD SUBMITTAL
02-05-26	1 1st PC RESPONSE
02-19-26	2 2nd PC RESPONSE

SHEET INFORMATION:

STK PROJECT NO.: 365-03-25
SCALE: AS NOTED
DATE: NOVEMBER 2025
PLOT DATE: –
DRAWN BY: JN

SEAL:

LICENSED ARCHITECT · ARMANDO FINALE · No. C31476 · REN. 07-31-27 · STATE OF CALIFORNIA

SHEET TITLE:
UTILITY SITE PLAN - SCE

SHEET NO.:
A0.1

J:\365-City of Perris\365-03-25 South Perris Fire Station\Arch\sce\sce\A0.1-A0.2 - UTILITY PLAN - SCE.dwg
04/1/2025 2:04PM

CONSTRUCTION NOTES:

UNLESS OTHERWISE SPECIFIED ON THE WORKING DRAWING WHICH FORMS A PART OF THE SPECIFICATION, THE CONTRACTOR/DEVELOPER SHALL FURNISH THE FOLLOWING ITEMS AT NO COST TO THE EDISON COMPANY.

SOUTHERN CALIFORNIA EDISON COMPANY HAS ATTEMPTED TO CORRECTLY SHOW ALL EXISTING UTILITIES AND SUBSTRUCTURES IN THE VICINITY OF THE WORK, BUT DOES NOT GUARANTEE THERE ARE NO OTHER SUBSTRUCTURES IN THE AREA. FAILURE OF SCE TO SHOW ALL SUBSTRUCTURES IN THEIR CORRECT LOCATION WILL NOT BE A BASIS FOR A CLAIM FOR EXTRA WORK, AND THE CONTRACTOR SHALL BE RESPONSIBLE FOR ALL DAMAGES TO SUBSTRUCTURES WHETHER SHOWN OR NOT.

1. FOR GENERAL SPECIFICATIONS SEE UGS GI 001.

2. CONDUIT:
   a. MINIMUM COVER IN STREET OR PARKWAY IS 30" BELOW GUTTER GRADE, UNLESS NOTED OTHERWISE.
   b. MINIMUM COVER ON PRIVATE PROPERTY IS 30" BELOW FINISHED GRADE, UNLESS NOTED OTHERWISE.
   c. CONTRACTOR IS TO FURNISH AND INSTALL APPROVED CONDUIT TO EDISON SPECIFICATIONS PER UGS CD 100.1, 110 AND 120.
   d. FOR THE TYPE OF CONDUIT FOR THIS JOB, SEE UGS CD 170.1.
   e. INSTALL ALL RISERS PER UGS CD 160, 161, 162 AND 170.
   f. CAP ALL MAINLINE CONDUITS PER UGS CD 148 AND SERVICE CONDUITS PER UGS CD 150.
   g. INSTALL BLANK CONDUIT PLUGS IN ALL CONDUITS TERMINATING INTO VAULTS, MANHOLE'S, PM'S, SOE'S & ALL CAP LOCATIONS, PER UGS CD 180.1 & UGS CD 180.2
   h. INSTALL PULL ROPE IN ALL CONDUIT RUNS. PULL ROPE TO BE AT LEAST 3/8" POLYPROPYLENE ROPE, BRAIDED OR TWISTED. FOR SPECIFICATIONS, APPROVED MAKES, AND SUPPLIERS, SEE UGS GI 040.
   i. ALL CONDUIT MUST BE MANDRELED WITH THE APPROVED MANDREL UGS CD 197.

3. CONDUIT RADIUS REQUIREMENTS:
   a. THE MINIMUM RADIUS FOR BENDS ARE:
      36" FOR CONDUITS 3" IN DIAMETER OR SMALLER
      48" FOR CONDUITS 4" AND 5" IN DIAMETER
      60" FOR 6" DIAMETER CONDUIT
   b. THE MINIMUM RADIUS FOR ALL SWEEPS OF ALL MAINLINE CONDUITS IS 12'-6" (UNLESS NOTED OTHERWISE).

4. EXCAVATION AND BACKFILL:
   a. WORK AREA SHALL BE CLEARED AND ROUGH GRADED TO WITHIN FOUR INCHES OF FINAL GRADE PRIOR TO INSTALLATION OF EDISON CONDUIT OR STRUCTURES.
   b. ALL EXCAVATIONS SHALL BE IN ACCORDANCE WITH THE CALIFORNIA STATE CONSTRUCTION SAFETY ORDERS (WHEN APPLICABLE), EDISON SPECIFICATIONS, AND ALL GOVERNING LOCAL ORDINANCES.
   c. EACH TRENCH TO BE A UNIFORM DEPTH BELOW FINAL GRADE PRIOR TO INSTALLATION OF EDISON CONDUIT OR STRUCTURES.
   d. BACKFILL SHALL BE PROVIDED BY THE CONTRACTOR FOR ALL EXCAVATIONS AND SHALL INCLUDE CRUSHED ROCK, CONCRETE, AND/OR IMPORTED BACKFILL, WHEN REQUIRED.
   e. BACKFILL WITH A MINIMUM OF ONE SACK PER YARD SAND CEMENT SLURRY AROUND AND OVER VAULTS AND MANHOLES PER UGS GI 030, SECTION 6.4 AND AROUND PM'S WITHIN ONE FOOT OF FINISHED GRADE, PER UGS SS 590.1.
   f. BACKFILL PER EDISON SPECIFICATIONS, SHALL IMMEDIATELY FOLLOW CONDUIT OR SUBSTRUCTURE INSTALLATION. AT NO TIME SHALL CONDUIT BE LEFT EXPOSED OVER 24 HOURS.
   g. NO ROCKS ARE ALLOWED WITHIN 12 INCHES OF DIRECT-BURIED CABLES OR ANY CONDUIT WITHOUT CONCRETE ENCASEMENT. NATIVE BACKFILL CAPABLE OF PASSING THROUGH A ONE-HALF INCH MESH SCREEN SHALL BE CONSIDERED TO BE "ROCK FREE". IF EXISTING BACKFILL DOES NOT PASS THROUGH A 1/2" SCREEN, PLACE IMPORTED SAND 3" BELOW AND 12" ABOVE EDISON CABLES. AFTER THIS POINT, NO ROCKS LARGER THAN 12" DIAMETER ARE PERMITTED.
   h. ALL BACKFILL SHALL BE COMPACTED TO MEET OR EXCEED LOCAL ORDINANCES OR OTHER REQUIREMENTS. IT SHALL BE PLACED IN A MANNER THAT WILL NOT DAMAGE THE CONDUIT OR SUBSTRUCTURE OR ALLOW FUTURE SUBSIDENCE OF THE TRENCH OR STRUCTURES.

5. PAVING:
   REPAVING, WHERE REQUIRED, SHALL BE PLACED IN SUCH A MANNER THAT INTERFERENCE WITH TRAFFIC, INCLUDING PEDESTRIAN TRAFFIC, WILL BE KEPT TO A MINIMUM. THE CONTRACTOR SHALL ESTABLISH A PROGRAM OF REPAVING ACCEPTABLE TO THE MUNICIPALITY, COUNTY, OR OTHER AUTHORITY HAVING JURISDICTION AND WHICH IS ACCEPTABLE TO EDISON.

6. STRUCTURES:
   a. ALL SUBSTRUCTURES SHALL BE CONSTRUCTED OR INSTALLED TO EDISON SPECIFICATIONS.
   b. INSTALL PROTECTION BARRIERS PER UGS WS 830 WHEN REQUIRED IN AREAS EXPOSED TO TRAFFIC, PER EDISON INSPECTOR.
   c. ALL CONDUIT LINES AND CONCRETE FLOORED SUBSTRUCTURES SHALL BE WATER TIGHT.
   d. ALL GROUNDING MATERIALS SHALL BE FURNISHED AND INSTALLED BY THE CONTRACTOR.

7. RETAINING WALLS:
   WHEN REQUIRED, RETAINING WALLS SHALL BE PROVIDED BY THE DEVELOPER. WALLS ARE REQUIRED WHEREVER GRADE RISES MORE THAN 18 INCHES ABOVE THE STRUCTURE OR 24" ABOVE THE PAD SURFACE AT A DISTANCE OF 5 FEET FROM THE SAME, OR IN AREAS SUBJECT TO EROSION. DESIGN AND INSTALLATION MUST COMPLY WITH LOCAL BUILDING ORDINANCES. REFER TO EDISON INSPECTOR FOR TYPICAL SPACE REQUIREMENTS.

8. PERMITS:
   ALL PERMITS NECESSARY FOR EXCAVATION SHALL BE PROVIDED BY THE CONTRACTOR/DEVELOPER.

9. ACCESS:
   HEAVY TRUCK ACCESS SHALL BE MAINTAINED TO EQUIPMENT LOCATIONS. STRUCTURES MUST BE CLEAR OF ALL APPURTENANCES THAT WOULD OBSTRUCT THE LOADING OR UNLOADING OF EQUIPMENT.

10. SERVICES:
    a. METERS AND SERVICES SHALL COMPLY WITH EDISON ELECTRICAL SERVICES REQUIREMENTS.
    b. WIRING MUST BE IN ACCORDANCE WITH APPLICABLE LOCAL ORDINANCES AND APPROVED BY LOCAL INSPECTION AUTHORITIES.

11. LOCATION:
    a. THE LOCATION OF EXCAVATIONS AND STRUCTURES FOR EDISON SHALL BE AS SHOWN ON THE WORKING DRAWING. NO DEVIATION FROM THE PLANNED LOCATIONS WILL BE PERMITTED UNLESS APPROVED BY THE EDISON INSPECTOR. SEE UGS GI 001, SECTION 2.2.
    b. ACTUAL LOCATION OF OBSTRUCTIONS, STORM DRAINS, AND/OR OTHER FOREIGN UTILITIES TO BE THE RESPONSIBILITY OF THE CONTRACTOR. SEE UGS GI 001, SECTION 2.3.

12. CONTRACTOR IS TO VERIFY LOCATION AND WIDTHS OF ALL SIDEWALKS AND DRIVEWAYS PRIOR TO STREET LIGHT INSTALLATION. SEE UGS CD 175.1, UGS CD 175.2 AND UGS CD 175.3.

13. SURVEY:
    SURVEYING OF STREET IMPROVEMENTS, PROPERTY CORNERS, LOT LINES, FINISHED GRADE, ETC., NECESSARY FOR THE INSTALLATION OF UNDERGROUND FACILITIES MUST BE COMPLETED AND MARKERS OR STAKES PLACED PRIOR TO THE START OF THE INSTALLATION. IN ADDITION, DEVELOPER SHALL MAINTAIN THE MARKERS DURING THE INSTALLATION AND INSPECTION BY EDISON. GRADE AND PROPERTY LINE STAKES MUST SHOW ANY OFFSET MEASUREMENTS.

14. COORDINATION AND SUPERVISION:
    THE DEVELOPER SHALL PROVIDE SUPERVISION OVER AND COORDINATION AMONG THE VARIOUS CONTRACTORS WORKING WITHIN THE DEVELOPMENT IN ORDER TO PREVENT DAMAGE TO EDISON FACILITIES. HE IS RESPONSIBLE FOR THE COST OF REPAIRS, REPLACEMENT, RELOCATION, OR OTHER CORRECTIONS TO EDISON FACILITIES MADE NECESSARY BY HIS FAILURE TO PROVIDE SUPERVISION OR TO OTHERWISE COMPLY WITH THESE SPECIFICATIONS.

15. TELEPHONE AND OTHER UTILITY REQUIREMENTS:
    THE DRAWING PREPARED FOR THIS JOB MAY ALSO COVER THE FACILITIES TO BE INSTALLED FOR THE TELEPHONE COMPANY AND/OR OTHER UTILITY. ANY QUESTIONS CONCERNING DETAILS OF THEIR INSTALLATION SHOULD BE REFERRED TO THE COMPANY CONCERNED.

16. OWNERSHIP:
    DEVELOPER IS TO DEED TO THE EDISON COMPANY ALL STRUCTURES SHOWN HEREON EXCEPT THOSE SHOWN AS CUSTOMER OWNED.

17. WARRANTY:
    APPLICANTS EXPRESSLY REPRESENT AND WARRANT THAT ALL WORK PERFORMED AND ALL MATERIAL USED IN MEETING APPLICANTS' OBLIGATIONS HEREIN ARE FREE FROM DEFECTS IN WORKMANSHIP AND ARE IN CONFORMITY WITH SOUTHERN CALIFORNIA EDISON COMPANY'S REQUIREMENTS. THIS WARRANTY SHALL COMMENCE UPON RECEIPT BY APPLICANTS OF COMPANY'S FINAL ACCEPTANCE AND SHALL EXPIRE ONE YEAR FROM THAT DATE. APPLICANTS AGREE TO PROMPTLY CORRECT TO THE COMPANY'S SATISFACTION AND THAT OF ANY GOVERNMENTAL AGENCY HAVING JURISDICTION AND AT APPLICANT'S EXPENSE ANY BREACH OF THIS WARRANTY WHICH MAY BECOME APPARENT THROUGH INSPECTION OR OPERATION OF UNDERGROUND ELECTRIC SYSTEM BY COMPANY DURING THIS WARRANTY PERIOD.

18. INSPECTION:
    INSPECTION IS REQUIRED DURING THE CONSTRUCTION PERIOD. A 48 HOUR ADVANCE NOTICE OF INTENT TO START CONSTRUCTION IS REQUIRED FROM THE CONTRACTOR TO THE SOUTHERN CALIFORNIA EDISON COMPANY. STANDARDS OF EDISON CONSTRUCTION REQUIREMENTS ARE AVAILABLE UPON REQUEST.

DUCT AND STRUCTURE INSPECTOR: SHAUN HUDSON PHONE: (951) 348-0604

CABLING CONSTRUCTION COORDINATOR: TBD PHONE:

D05: 03/22/24

6'X8'-6"X6" AND 8'X10'-6" SLAB BOX
FOR PAD-MOUNTED TRANSFORMER, VFI-4, AND RAR
SEE UGS SS 530-1

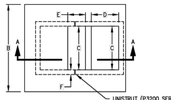

PLAN

SLAB-BOX DESCRIPTIONS	SLAB-BOX DIMENSIONS (INCH)					
	A	B	C	D	E	F
6' X 8'-6"	102	72	48	30	18	11
8' X 10'	120	96	48	30	18	18

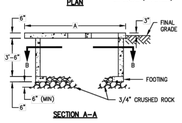

SECTION A-A

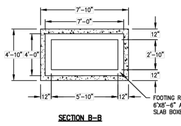

SECTION B-B

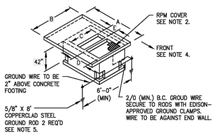

DETAIL
(GROUND ROD INSTALLATION)

NOTES:
1. PAD OVERHANG TO REST ON UNDISTURBED EARTH OR WELL-COMPACTED BACKFILL TO PREVENT FUTURE SUBSIDENCE.
2. THE SLAB 30" X 48" CLEAR OPENING WILL BE COVERED WITH A 2-1/2" X 4' RPM COVER AS SHOWN ON FC 618. SIX 1/2" STAINLESS STEEL BOLTS WITH STAINLESS STEEL CAPTIVE WASHERS WILL BE SUPPLIED FOR COVER BOLT DOWN.
3. SLAB RPM COVER RECESS WILL BE CONCRETE (NONMETAL FRAMED), AND PROVIDED WITH SIX 1/2" THREADED INSERTS, EACH WITH CLEAN OUT HOLES.
4. AN 8' MINIMUM CLEARANCE IS REQUIRED ON DOOR SIDE OF CABINET FOR OPERATION. REFER TO FIGURE SS 530-3 (SHEET 3) AND FIGURE SS 530-4 (SHEET 3) FOR WORKING CLEARANCES.
5. GROUND RODS, CLAMPS, AND WIRE WILL BE FURNISHED AND INSTALLED BY THE CONTRACTOR. SEE AC 703 FOR APPROVED GROUNDING MATERIALS. GROUND WIRE TO BE A MINIMUM OF 2/0 BARE COPPER.
6. MASTIC SEALANT IS REQUIRED AT JOINTS.
7. SEE FIGURE SS 530-2 (SHEET 2) FOR CONDUIT ENTRANCE GUIDELINES.
8. SEE SS 500 FOR APPROVED MANUFACTURERS.

D4S: 04/18/25

6'X8'-6" AND 8'X10' SLAB BOX
PLAN AND DETAIL "A"
SEE UGS SS 530-2

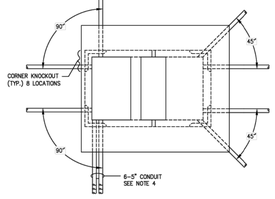

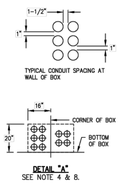

DETAIL "A"
SEE NOTE 4 & 8.

PLAN

NOTES:
1. ALL CONDUITS ARE TO ENTER SLAB BOX AT CORNER KNOCKOUTS WITHIN THE ANGLES SHOWN. THE WORKING DRAWING WILL SPECIFY HOW MANY CONDUITS ARE TO BE INSTALLED.
2. INSTALL ALL CONDUITS WITHIN THE CAST-IN KNOCKOUTS.
3. ALL CONDUITS TO BE INSTALLED ON A LEVEL COURSE ADJACENT TO BOX.
4. A MAXIMUM OF SIX FIVE-INCH CONDUITS CAN BE INSTALLED INTO ANY ONE KNOCKOUT. WHEN SIX FIVE-INCH CONDUITS ARE INSTALLED, DO NOT INSTALL MORE THAN FOUR 5-INCH CONDUITS IN ADJACENT KNOCKOUT (SEE NOTE 8).
5. ALL CONDUITS TO BE CUT SMOOTH AND FLUSH WITH INSIDE WALL OF BOX.
6. POUR A 12" MINIMUM OF CONCRETE ENCASEMENT (PER CD 134) AROUND ALL CONDUITS THAT ARE NOT ENCASED.
7. GROUT WORK AROUND ALL CONDUITS TO BE FLUSH WITH INSIDE SURFACE OF STRUCTURE AND HAVE A SMOOTH FINISH.
8. WHEN CONDUITS ARE INSTALLED IN BOTH KNOCKOUTS OF ANY ONE CORNER, THE CONDUITS WILL BE VERTICALLY STAGGERED IN ORDER TO ALLOW CABLE TO CROSS OVER (SEE DETAIL "A").
9. INSTALL GRADE RINGS AS NECESSARY IN ORDER TO MAINTAIN MINIMUM 30" COVER OVER CONDUITS. SEE CD 100.

D4SA: 04/18/25

MINIMUM CLEARANCES FOR PADMOUNTED TRANSFORMERS
SEE DDS-3, 3-44

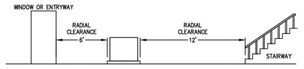

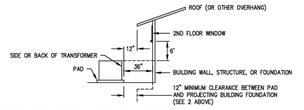

PAD-MOUNTED TRANSFORMER INSTALLATIONS SHALL CONFORM TO THE FOLLOWING:
1. PAD-MOUNTED TRANSFORMERS SHALL NOT BE LOCATED DIRECTLY IN FRONT OF ENTRYWAYS, STAIRWAYS, BENEATH WINDOWS THAT CAN BE OPENED, OR WHERE THEY WILL OBSTRUCT THE VISION OF VEHICULAR TRAFFIC.
2. PAD-MOUNTED TRANSFORMERS SHALL BE LOCATED AT LEAST THE MINIMUM DISTANCE, AS IDENTIFIED IN THE FIGURE ABOVE, AWAY FROM BUILDINGS OR OTHER STRUCTURES TO PROVIDE ADEQUATE SPACE FOR OPERATING, TO MINIMIZE VIBRATION HAZARD, AND TO MEET FIRE SAFETY REQUIREMENTS.
3. WHENEVER POSSIBLE, PLACE PAD-MOUNTED STRUCTURES AND EQUIPMENT AWAY FROM AREAS WITH FREQUENT IRRIGATION TO HELP PREVENT FUTURE CORROSION.
   INSTALL NEW STAINLESS STEEL PAD-MOUNTED EQUIPMENT ONLY IF EVERY EFFORT HAS BEEN MADE TO LOCATE THE PAD MOUNT AWAY FROM HIGH-CORROSION AREAS AND THE PAD MOUNT IS EXPECTED TO BE CHANGED OUT WITHIN 15 YEARS DUE TO CORROSION. CONTACT FE FOR APPROVAL.
   EXISTING MILD STEEL PAD-MOUNTED EQUIPMENT MAY BE UPGRADED TO STAINLESS STEEL IF THE EXISTING EQUIPMENT HAS FAILED DUE TO CORROSION WITHIN 15 YEARS OF INSTALLATION. CONTACT FE FOR APPROVAL.
   INSTALL ALL PAD-MOUNTED TRANSFORMERS PURCHASED AFTER 1/1/2024 NOW DESIGNED WITH STAINLESS STEEL BOTTOMS.
4. A CLEAR PASSAGEWAY OF 12 FEET MINIMUM SHALL BE AVAILABLE AT ALL TIMES, IMMEDIATELY ADJACENT TO ONE SIDE OF THE TRANSFORMER TO PROVIDE AN ACCESSIBLE ROADWAY FOR TRANSFORMER MAINTENANCE. THIS PASSAGEWAY SHALL BE DESIGNED TO MEET H-20 (20-TON) CONSTRUCTION.
5. IF SCE HAS INSTALLED OR AGREES TO INSTALL TRANSFORMERS AT LOCATIONS WHERE SCE CANNOT USE ITS STANDARD TRANSFORMER LIFTING EQUIPMENT, AND SPECIAL LIFTING FACILITIES ARE REQUIRED TO INSTALL OR REMOVE THE TRANSFORMERS ON THE CUSTOMER'S PREMISES, THE CUSTOMER SHALL AT THEIR EXPENSE, (1) FURNISH, INSTALL, OWN, AND MAINTAIN PERMANENT LIFTING FACILITIES, AND BE RESPONSIBLE FOR LIFTING THE TRANSFORMER TO AND FROM ITS PERMANENT POSITION, OR (2) PROVIDE (OR PAY FOR) PORTABLE LIFTING FACILITIES ACCEPTABLE TO SCE FOR INSTALLING OR REMOVING THE TRANSFORMERS SUCH OPERATIONS MAY AND SPACE PROVISIONS SHALL BE PROVIDED BY APPLICANT SUCH THAT ACCESS AND REQUIRED CLEARANCES FROM ADJACENT STRUCTURES CAN BE MAINTAINED.
6. TRANSFORMER STRUCTURES WILL NORMALLY BE INSTALLED ONLY IN NONTRAFFIC AREAS. TRANSFORMER PROTECTION IS REQUIRED WHEN COMPANY EQUIPMENT IS EXPOSED TO TRAFFIC. THIS PROTECTION MAY BE IN THE FORM OF BARRIERS, BARRICADES, OR CURB. A CURB MUST HAVE A MINIMUM HEIGHT OF 6 INCHES AND BE AT LEAST 6 INCHES THICK AND ITS FRONT FACE LOCATED 60 INCHES MINIMUM FROM THE EQUIPMENT FOUNDATION.

D5K: 03/22/24

WORKING SPACE AND CLEARANCE REQUIREMENTS 0-600V (SIDE VIEW)
UNDERGROUND SERVICE CONNECTIONS 0-600 VOLTS
SEE ESR FIGURE 3-2

SIDE VIEW

NOTES:
1. A MINIMUM OF 3 FEET OF CLEAR, LEVEL CONCRETE WORKSPACE IS REQUIRED IN FRONT OF ALL TERMINATION, METERING, AND SERVICE EQUIPMENT.
2. SEE ESR-3 FOR METER-MOUNTING HEIGHT REQUIREMENTS. METER-MOUNTING HEIGHT WILL BE MEASURED FROM THE STANDING AND WORKING SPACE TO THE CENTERLINE OF THE METER(S).
3. WHEN SERVICE EQUIPMENT IS INSTALLED ON AN ELEVATED PORTION OF THE FLOOR/GROUND, OR HOUSEKEEPING PAD, THE PAD SHALL BE FLUSH WITH THE BOTTOM OF THE SERVICE EQUIPMENT AND EXTEND A MINIMUM OF THREE FEET. THIS IS MEASURED FROM THE FRONT OF THE SERVICE EQUIPMENT OR THE OUTER DOOR(S) OF THE SWITCHBOARD NEMA 3R ENCLOSURE WHEN INSTALLED. IN NO CASE SHALL THE MAXIMUM METER HEIGHT OF 6'-3" BE EXCEEDED.
4. TO MAINTAIN A SAFE, CLEAR, AND LEVEL CONCRETE WORKING AREA IN FRONT OF NEW OR EXISTING METER AND SERVICE EQUIPMENT, A CONCRETE SLAB, ACCEPTABLE TO THE COMPANY, MUST BE USED.
5. FOR SWITCHBOARDS ABOVE 800V, FIVE-FOOT MINIMUM OF CLEAR AND LEVEL CONCRETE STANDING AND WORKING SPACE IS REQUIRED IN THE FRONT, REAR, AND SIDE OF ANY SECTION WHERE SUCH PART SUPPORTS OR PROVIDES ACCESS TO METERING, TESTING EQUIPMENT, OR SERVICE CABLE TERMINATION SECTIONS.

16.11 PROTECTIVE BARRIERS (POSTS/BOLLARDS) FOR SERVICE EQUIPMENT

BARRIER POSTS/BOLLARDS ARE USED TO PROTECT THE METER AND SERVICE EQUIPMENT, AS WELL AS PERSONNEL, FROM VEHICULAR CONTACT, AND TO PROHIBIT ENCROACHMENT INTO THE WORKING SPACE (FOR EXAMPLE, LOADING ZONES, DRIVEWAYS, CONGESTED AREAS, OFF STREET PARKING, AND SO ON).

THE CUSTOMER SHALL PROVIDE AND INSTALL "NON-REMOVABLE" BARRIERS (POSTS/BOLLARDS) TO PROVIDE THE PROPER SAFE WORKING CLEARANCES WHERE THE WORKSPACE IS EXPOSED TO VEHICULAR OR OTHER HAZARDOUS CONDITIONS. METERS WILL NOT BE SET UNTIL THE BARRIERS HAVE BEEN INSTALLED. METER CABINET DOORS MUST OPEN A MINIMUM OF 90 DEGREES AND NOT CONFLICT WITH BARRIER POSTS. A MINIMUM CLEARANCE OF 3-FEET IS REQUIRED FROM THE FACE OF THE SWITCH GEAR TO THE BOLLARD/POST.

D9B: 11/14/25

NOTES TO CREW:
- TRUCK ACCESS GOOD
- GPS: 33.752029, -117.20599
- GEOVIEW: MT-8034-D
- MUST BE WORKED WITH OR AFTER TD1796362

NOTES TO CIVIL:
- MANDREL CUSTOMER CONDUIT FROM P5758962 TO P5818581

TYPICAL CONDUIT BANK SECTION
SEE UGS CD 120

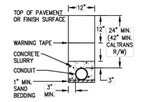

CONDUIT BANK DETAIL
1 CONDUIT
(NTS)

D72A: 11/14/25

TYPICAL CONDUIT BANK SECTION
SEE UGS CD 120

CONDUIT BANK DETAIL
4 CONDUITS
(NTS)

D72C: 11/14/25

CONNECTING TO EXISTING SCE STRUCTURES

- PER SCE REQUIREMENTS, CUSTOMERS ARE NOT ALLOWED TO ENTER, INTERCEPT OR TIE-IN TO EXISTING SCE FACILITIES; E.G. STRUCTURES, EQUIPMENT, MULTI-CONDUIT RUNS/BANKS, OR CONDUCTORS. THESE FACILITIES MAY BE ENERGIZED AND THE WORK WILL ONLY BE PERFORMED BY SCE. CONTACT THE APPROPRIATE SCE INSPECTOR TO SCHEDULE AN APPOINTMENT. CUSTOMERS MAY CONNECT TO AN EXISTING CONDUIT STUB WITHOUT A SCE INSPECTOR PRESENT.
- MULTI-CONDUIT RUNS/BANKS ARE RUNS OF CONDUIT IN CLOSE PROXIMITY TO EACH OTHER AND OTHER SCE FACILITIES. A CONDUIT STUB IS A SINGLE EMPTY CONDUIT STUB THAT IS NOT IN CLOSE PROXIMITY TO OTHER SCE OWNED FACILITIES. REFER TO THE WORK ORDER MAP FOR DETAILS.
- PER CPUC/SCE'S RULE 15 B.1.A AND RULE 16 D.1.A., THE CUSTOMER WILL PROVIDE ALL NECESSARY EXCAVATIONS (WITH THE EXCEPTION OF EXCAVATION UNDER PADS AND PRIMARY SPLICE BOXES), MATERIAL (INCLUDING CONDUIT AND STRUCTURES) AND ENCASEMENT, TO BE UTILIZED IN THE INTERCEPT/TIE-IN PROCESS.
- THE CUSTOMER MUST ADHERE TO ALL APPLICABLE CAL-OSHA, LOCAL, CITY, STATE AND FEDERAL REGULATIONS, (INCLUDING, BUT NOT LIMITED TO, ALL NECESSARY SHORING AND TRAFFIC CONTROL IN PLACE TO PERFORM THE INTERCEPT/TIE-IN WORK BY SCE'S UNDERGROUND CIVIL CONTRACTOR(S).
- INTERCEPT/TIE-IN WORK MUST BE COORDINATED WITH SCE'S CIVIL CONTRACTORS THROUGH THE DIVISION INSPECTOR/P-SPEC TO LIMIT EXPOSURE OF EXCAVATION(S). CUSTOMER IS RESPONSIBLE FOR SECURING EXCAVATION(S).

D08: 03/22/24

WARNING

THE EXCAVATOR MUST TAKE ALL STEPS NECESSARY TO AVOID CONTACT WITH UNDERGROUND FACILITIES WHICH MAY RESULT IN INJURY TO PERSONS OR DAMAGE TO FACILITIES IN THE AREA. THE INDICATED LOCATIONS OF EDISON UNDERGROUND FACILITIES, AS PROVIDED, ARE BELIEVED TO BE ACCURATE, HOWEVER, THE FINAL DETERMINATION OF EXACT LOCATIONS AND THE COST OF REPAIR TO DAMAGED FACILITIES IS THE RESPONSIBILITY OF THE EXCAVATOR.

D1S: 03/22/24

CUSTOMER-OWNED CONDUIT MATERIAL* AND CONCRETE ENCASEMENT ARE TO BE INSTALLED IN ACCORDANCE WITH EDISON ELECTRICAL SERVICE REQUIREMENTS.

*SUBJECT TO APPROVAL BY LOCAL INSPECTION AUTHORITIES

D1K: 03/22/24

WHERE CONDUITS ARE PICKED UP OR INTERCEPTED, CONDUIT SHALL BE MANDRELLED AND PULL ROPE INSTALLED FROM TERMINAL TO TERMINAL.

D0T: 03/22/24

FINAL DESIGN
APPROVED FOR CONSTRUCTION

D1B: 03/22/24

UNDERGROUND SERVICE ALERT
Contact USA
Dial 811 or 800-422-4133
www.digalert.org/contact
FOR UNDERGROUND LOCATING TWO WORKING DAYS BEFORE YOU DIG

SOUTHERN CALIFORNIA EDISON
An EDISON INTERNATIONAL Company

SCALE: 1 IN = 40 FT

DISTRICT: 77 – MENIFEE		PROJ. MGR: LINDSEY YOUNG PHONE: (760) 285-3234		PLANNER: LINDSEY YOUNG PHONE: (760) 285-3234		DESIGNER: LINDSEY YOUNG	
PROJECT NO.: 31623B2	SERVICE REQUEST: 4040449	MSR NO.: 2485022		PRODUCT-1: 2485022–NEW METER & SERVICE			ASSOC DESIGN: N/A
CIRCUIT / VOLTAGE: TRUMBLE 12KV		GPS: SEE NOTES		PRODUCT-2: N/A			ASSOC DESIGN: N/A
SUB / PG NO.: VALLEY SUB / B2		CIRCUIT CODE: 18229		PRODUCT-3: N/A			ASSOC DESIGN: N/A
INVENTORY MAP: 576-1704-2		J.P.A. NO.: N/A		PROPOSED CONSTRUCTION (LOCATION): 2SN – COMM/INDUST M&S UG 2495 MURRIETA RD PERRIS CA 92585 UTILITY CONSULTANT: MIRANDA GALLE (909) 890-3700			
TYPE	DATE	APPROVED BY	CHECKED BY	DRAWN BY	PAX #	SHEET: 2 or 2	DESIGN/DRWG NO.: 1905167_0.01
Southern California Edison Company							

STK
42095 ZEVO DR., TEMECULA, CALIFORNIA 92590-3780
Phone: 951.296.9110 Fax: 951.296.6079 Email: stk@stkinc.com

CONSULTANT:

REVIEWED FOR CODE COMPLIANCE

THESE PLANS AND DOCUMENTS HAVE BEEN REVIEWED AND FOUND TO BE IN COMPLIANCE WITH THE CODES AND ORDINANCES OF THE CITY OF PERRIS JURISDICTION. ISSUANCE OF A PERMIT BASED ON PLANS IS SUBJECT TO APPROVAL BY OTHER DEPARTMENTS AND ANY NOTED CONDITIONS. THE ISSUANCE OF A PERMIT BASED ON PLANS SHALL NOT PREVENT THE APPROVAL OF ANY VIOLATIONS OF APPLICABLE CODES AND STANDARDS. NOR RELIEVE THE OWNER, DESIGN PROFESSIONAL OF RECORD, OR CONTRACTOR OF RESPONSIBILITY FOR COMPLIANCE WITH APPLICABLE CODES AND STANDARDS. THESE DOCUMENTS DOES NOT AUTHORIZE CONSTRUCTION IS DESIGNED IN VIOLATION OF ANY FEDERAL, STATE OR LOCAL REGULATIONS.

BUILDING NUMBER(S) ADDRESS(ES) NOT REVIEWED BY: STEVEN MA, PE, CASp

THIS SET OF THE PLANS AND SPECIFICATIONS SHALL BE KEPT ON THE JOB SITE AT ALL TIMES DURING CONSTRUCTION. ANY CHANGES, MODIFICATIONS OR DEVIATIONS WITHOUT AUTHORIZATION FROM THE CITY OF PERRIS BUILDING & SAFETY DEPARTMENT IS PROHIBITED AND MAY RESULT IN A FINE OR REVOCATION OF APPROVAL OF ALL AFFECTED DEPARTMENTS.

STRUCTURAL TECHNICAL SOLUTIONS INC.

PROJECT REQUIREMENTS (Y/N)

EDISON EASEMENT REQUIRED	N
PWRD 88 REQUIRED UG	Y
CIVIL ONLY WORK ORDER	N
PERMIT REQUIRED	Y
PERMIT TYPE: ENCROACHMENT	
OUTAGE REQUIRED	Y
OUTAGE DATE: _____ TIME: _____	
TRAFFIC CONTROL REQUIRED	Y
PED. TRAFFIC CONTROL REQ'D	N
CONVEYANCE LETTER REQ'D	N
ENVIRONMEN

FRONTIER COMMUNICATION CONSTRUCTION SPECIFICATIONS

1. Contact Frontier Engineer JUSTIN RATHBONE (951) 434-9900 sixty (60) days prior to need of service in order to confirm compliance,order materials,and schedule work forces.
2. FRONTIER COMMUNICATIONS,INCORPORATED RESERVES THE RIGHT TO REFUSE ANY CONDUIT, PULL BOXES, MANHOLES, OR UTILITY BOXES THAT DEVIATE FROM PLANS AND SPECIFICATIONS.
3. CHANGES OR DEVIATIONS FROM THIS PLAN MUST BE APPROVED BY FRONTIER.
4. CONTACT THE FRONTIER INSPECTOR 48 HOURS BEFORE TRENCHING AND UPON COMPLETION OF YOUR SUBSTRUCTURES TO SCHEDULE THE FINAL INSPECTION.
5. FRONTIER INSPECTOR SHALL BE PRESENT ON SITE WHEN CONTRACTOR NEEDS TO ACCESS ANY EXISTING FRONTIER FACILITY.
6. All conduit risers bends to have a minimum thirty-six (36) inch radius.
7. All horizontal ninety degree bends (90°) shall have a radius of not less than 12.5 feet and all vertical ninety degree bends (90°) shall have a radius of not less than three feet. No more than two (2) ninety degree (90°) horizontal bends shall be placed in any single run unless otherwise specified. Contact Frontier engineer concerning any required deviations.
8. All conduit must be proven using a mandrel no less than a 1/2" smaller than the conduit to be accepted. Mule tape shall be placed in all conduits proven. Wall to wall measurements must be taken with a mule tape.
9. Accurate AS-BUILTS shall be provided to the Frontier inspector assigned to this project. AS-BUILTS shall include conduit section measurements, wall to wall footages, stations and offsets of AS-BUILT Frontier structures, and the cover to the top of the Frontier underground structure placed. Copy of the AS-BUILT conduit work order must be provided to the Frontier inspector assigned to your project.
10. Contact WAYNE SAMP (951) 343-9795 at the inspection office for coordination of inspection dates.
11. Place weatherproof cap on end of all conduits terminated outside of a building.
12. Place temporary weatherproof cap on end of all conduits exposed during construction.
13. Rigid steel, approved plastic conduit (PVC Schedule #40,TYPE-C (4") or DB-120 (2") or Frontier provided or approved Roll Sheet sub duct, is specified for underground construction. Conduiets, Flex, Transite, Plumbers fittings, Water and Gas Pipes must NOT be used. RIGID STEEL MUST BE USED WHEN CONDUIT CAN BE EXPOSED TO VEHICULAR TRAFFIC.
14. Conduit terminated on a pole must be PVC Schedule 80. If conduit will be exposed to traffic, rigid steel pipe and sweep is required to 48" above finished grade otherwise turned up 12" above finished grade. Location of riser on pole will be as shown on conduit plan and location can be modified by approval of Frontier engineer/inspector only.
15. Minimum separation from other utilities shall be a minimum of 12". Conduit placed in same trench with primary power conduit must be separated by no less than twelve inches(12") of well-packed sand or three inches(3") of concrete. Minimum cover shall be no less than thirty (30") inches measured from the final grade of the street flow line to the top of Frontier structure unless noted otherwise. Ducts placed in the driven portion of the roadway must have no less than 48 inches(48") of cover to top of pipe measured at flow line of roadway.
16. FRONTIER RECOMMENDATIONS: Provide a minimum 1-4" conduit home run from each suite location to the main terminal backboard in lieu of running cables over drop ceiling access. Frontier will not install cables not contained in conduit.
17. Provide source of ground at the telephone backboard location: (1) #6 insulated copper wire (solid preferred) to power system ground. - (1) #6 insulated copper wire (solid preferred) to metallic water pipe bonded to previously described permanent metallic structure. Leave adequate wire to extend six feet beyond base of backboard. NOTE: THE FOLLOWING MUST NOT BE USED FOR GROUND SOURCES: ROOF TRUSSES, FLOOR JOINTS, BRACES, SPRINKLER SYSTEM PIPES, METAL ELECTRICAL DISTRIBUTION CONDUIT, AND HORIZONTAL STEEL MEMBERS LESS THAN 3/8" THICK.
18. Provide cable racking as described in attachment. Provide pulling irons as described in attachment.
19. Three to six weeks will be needed from the date of final inspection for Frontier to start placing facilities. All paperwork and easements must also be completed, if applicable.
20. Work crew to adjust manholes to final grade as shown on the approved grading plan.
21. Actual footages of conduit are needed to order materials.

CONDUIT DESIGN

HUB DETAIL H2002

HARVILL AVE / PLACENTIA AVE
PERRIS, CA,92570



VICINITY MAP
NTS

PICK UP POINT:
-FRONTIER HH#UNK

PATH LENGTH:
- TRENCH = 112'

MATERIALS:
- 112' OF 4" PVC
- (1) 2X3 HH(S)

SHEET INDEX
1 - COVER
2 - CONDUIT DESIGN
3 - DETAILS

CONSTRUCTION NOTE:

1.FOOTAGES ARE APPROXIMATE. PLACE HH'S AND FPS AT PROPERTY LINES, NEAR POINT OF CONNECTION AT EACH SERVING ADDRESS.
2.PLACE HH'S AND FP'S IN DIRT/GRASS BEHIND SIDEWALK UNLESS PREVIOUSLY APPROVED TO PLACE ELSEWHERE BY THE CM3, CITY INSPECTOR AND ENGINEER.
3.LOCATE AND UTILIZE EXISTING PATH, SUBSTRUCTURE, HH'S, PEDS AND FP'S WHEN FOUND AND (RE)USEABLE IN THE FIELD.
4.DO NOT CUT CONCRETE SPANDRELS, CROSS-GUTTERS, OR CURBS.
5.WORK CREWS TO "PROTECT IN PLACE" DRIVEWAYS, IMPROVED LANDSCAPES AND DECORATIVE CONCRETE.
6.WORK CREWS ARE NOT TO DISTURB GUTTERS, SIDEWALKS AND DRIVEWAYS AND PUNCH UNDER WHERE ALLOWED BY LOCAL ORDINANCE.
7.ALL CUTS MUST HAVE STRAIGHT AND NEAT EDGES, MUST BE SQUARED AND NEW ASPHALT TACK COATED EVENLY AND SILICA SANDED.

ABBREVIATIONS	PROPOSED	EXISTING
BACKBOARD	BOBD	EXTG
CENTERLINE	CL	℄
CONCRETE	CONC	conc
DRIVEWAY	DWY	dwy
EDGE OF PAVEMENT	EOP	eop
FACE OF CURB	FOC	foc
FLOWLINE	FL	fl
MANHOLE	MH	mh
PEDESTAL	PED	ped
POLYVINYL CHLORIDE	PVC	pvc
PULL BOX	PB	pb
PROPERTY LINE	PL	pl
RAILROAD	RR	rr
RAILROAD R/W	RR R/W	rr r/w
RIGHT OF WAY	R/W	r/w
SOUTHERN CA EDISON	SCE	sce
WALL TO BUILDING	W/B	w/b
WALL TO POLE	W/P	w/p
NOT TO SCALE	NTS	

LEGEND

CONDUIT
- Backbone/Backbone Conduit or ABS
- Service Lateral Conduit
- Joint Trench
- Slot Trench
- Proposed Construction Cell Slot

UTILITIES	Existing	Proposed
Gas	g	G
Water	w	W
Telephone	t	T
Son Sewer	ss	SS
Electric	e	E
Storm Drain	sd	SD

POLES	Existing	Proposed
Telephone Owned	○	○
Foreign Owned	✕	✕
Joint Owned	⊘	⊘

FACILITIES
- Handhole
- Manhole
- Pedestal
- Pullbox
- Riser Pit
- Telephone Vault
- Tree Standard
- 5/8" -8' Copper Ground Rod
- Material provided by Frontier & Placed by Developer
- Material provided by Developer Installed by Frontier

FRONTIER
A Verizon Company

COMMUNICATIONS

JOB ID: 70168-5304318	DATE: 05/08/2026
TITLE: CONDUIT DESIGN	
STREET ADDRESS: 2495 MURRIETA RD	
CITY/STATE: PERRIS, CA, 92570	
FTR ENGINEER: JUSTIN RATHBONE 951 434-9900	
FTR INSPECTOR: WAYNE SAMP 951 343-9795	
DYNAMIC TELCO	DRAWN BY: DYNAMIC TELCO 951-992-1472
	EST. #: SHEET#: 1 OF 3

DESIGNATING
Section 4216(a)(1) of the Government Code requires a Dig Alert Identification Number be issued before excavation Permit is Excavator will be notice For your Dig Alert I.D. Number call:
Underground Service Alert
811
Call: 1-800-227-2600

GENERAL NOTES:
1. RIGHT OF WAY SHOWN BASED ON AVAILABLE RECORD DATA. WORK CREW TO VERIFY LOCATION OF RIGHT OF WAY PRIOR TO CONSTRUCTION.
2. UTILITIES SHOWN LOCATED BY RECORD MAPS/FIELD OBSERVATIONS.

EXACT UTILITIES LOCATIONS TO BE VERIFIED BY USA MARKINGS PRIOR TO DIGGING.

CONSTRUCTION NOTE:
WORK CREW TO PUNCH UNDER GUTTERS, SIDEWALKS, & DRIVEWAYS

CONSTRUCTION NOTE:
WORK CREW TO PROTECT IN PLACE DRIVEWAYS

CONSTRUCTION NOTE:
WORK CREW TO PLACE FACILITIES AS CLOSE TO PROPERTY LINE AS POSSIBLE

CURVE DATA				
	△	R	L	T
1	90°00'00"	5.0'	7.8'	5.0'
2	45°00'00"	5.0'	3.9'	2.1'
3	22°30'00"	5.0'	1.9'	0.99'
4	90°00'00"	12.5'	19.6'	12.5'
5	45°00'00"	12.5'	9.8'	5.18'
6	22°30'00"	12.5'	4.9'	2.49'

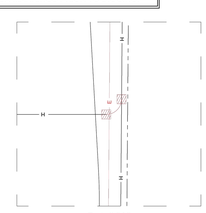

Detail "A"
SCALE: 1"=20'

FRONTIER
A Verizon Company

COMMUNICATIONS

JOB ID: 70168-5304318	DATE: 05/08/2026
TITLE: CONDUIT DESIGN	
STREET ADDRESS: 2495 MURRIETA RD	
CITY/STATE: PERRIS, CA, 92570	
FTR ENGINEER: JUSTIN RATHBONE 951 434-9900	
FTR INSPECTOR: WAYNE SAMP 951 343-9795	
DYNAMIC TELCO	DRAWN BY: DYNAMIC TELCO 951-992-1472
	EST. #: SHEET#: 2 OF 3

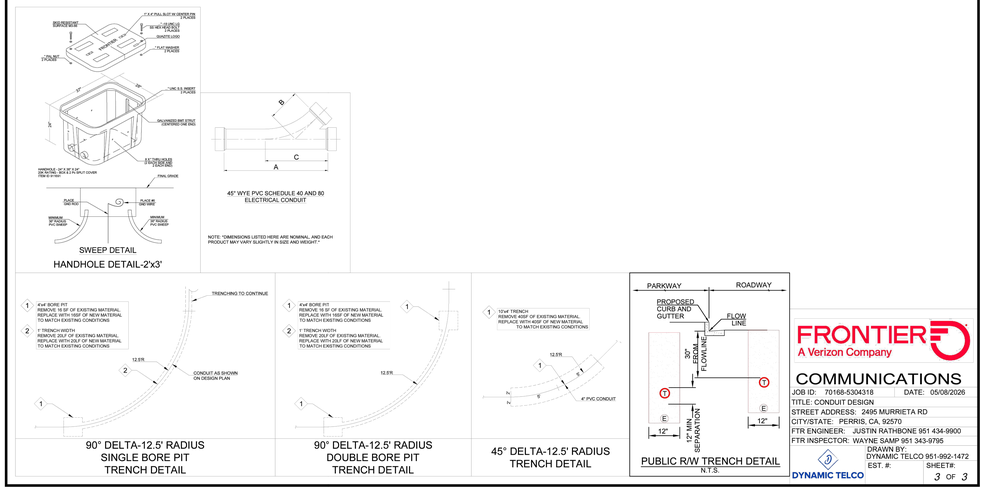

FRONTIER
A Verizon Company

COMMUNICATIONS

JOB ID: 70168-5304318	DATE: 05/08/2026
TITLE: CONDUIT DESIGN	
STREET ADDRESS: 2495 MURRIETA RD	
CITY/STATE: PERRIS, CA, 92570	
FTR ENGINEER: JUSTIN RATHBONE 951 434-9900	
FTR INSPECTOR: WAYNE SAMP 951 343-9795	
DYNAMIC TELCO	DRAWN BY: DYNAMIC TELCO 951-992-1472
	EST. #: SHEET#: 3 OF 3

STK
SOLUTIONS INC.
42095 ZEVO DR., TEMECULA, CALIFORNIA 92590-3780
Phone: 951.296.9110 Fax: 951.296.6079 Email: stk@stkinc.com

CONSULTANT:

REVIEWED FOR CODE COMPLIANCE

THESE PLANS AND DOCUMENTS HAVE BEEN REVIEWED AND FOUND TO BE IN SUBSTANTIAL COMPLIANCE WITH THE CODES IN EFFECT AT THE JURISDICTION. ISSUANCE OF A PERMIT BASED ON PLANS IS SUBJECT TO APPROVAL BY OTHER DEPARTMENTS AND ANY NOTED CONDITIONS. THE ISSUANCE OF A PERMIT BASED ON PLANS, SPECIFICATIONS OR OTHER DATA, APPROVAL OF ANY VIOLATIONS OF ANY LAWS, CODES AND STANDARDS, NOR RELIEVE THE OWNER, DESIGN PROFESSIONAL OF RECORD, OR CONTRACTOR OF RESPONSIBILITY FOR COMPLYING WITH APPLICABLE REQUIREMENTS. PLANS OR DOCUMENTS DOES NOT AUTHORIZE CONSTRUCTION TO BE EXECUTED IN VIOLATION OF ANY FEDERAL, STATE OR LOCAL REGULATION.

BUILDING BUREAU VOLUNTEER, INC.
REVIEWED BY: STEVEN MA, PE, CASp

THIS SET OF THE PLANS AND SPECIFICATIONS MUST BE KEPT ON THE JOB SITE AT ALL TIMES DURING CONSTRUCTION. IT IS UNLAWFUL TO MAKE ANY CHANGES WITHOUT AUTHORIZATION FROM THE BUILDING OFFICIAL. PERMIT HOLDER MUST KEEP APPROVED PLANS IN POSSESSION AT ALL TIMES. A FINAL APPROVAL IS GRANTED BY ALL APPLICABLE DEPARTMENTS.

© STK SOLUTIONS INC.

PROJECT ADMINISTERED BY:

CITY OF PERRIS

101 NORTH "D" STREET
PERRIS, CA 92570

PROJECT NAME:

FIRE STATION 105 AND ADMINISTRATION BUILDING

PROJECT CIP: F077

2495 MURRIETA ROAD
PERRIS, CA 92585

ISSUE INFORMATION:

DATE:	INFORMATION:
11-26-25	95% CD SUBMITTAL
02-05-26	1 1st PC RESPONSE
02-19-26	2 2nd PC RESPONSE
02-22-26	3 3rd PC RESPONSE
04-27-26	4 4th PC RESPONSE

SHEET INFORMATION:

STK PROJECT NO.: 365-03-25
SCALE: AS NOTED
DATE: NOVEMBER 2025
PLOT DATE: –
DRAWN BY: JN

SEAL:

LICENSED ARCHITECT ANTONIO FINATO No. C31476 REN. 07-31-27 STATE OF CALIFORNIA

SHEET TITLE:

UTILITY PLAN - FRONTIER

SHEET NO.:

A0.3

J:\365-City of Perris\365-03-25 South Perris Fire Station\Architects\sub\A0.3 - UTILITY PLAN - FRONTIER.dwg
05/11/2026 2:08PM

ATTACHMENT 14

Mounting Specifications for Fire Lane Entrance and No Parking Signs

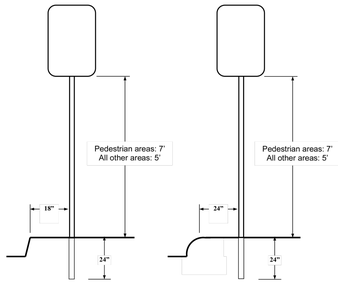

STANDARD CURB **ROLLED CURB**

Signs shall be mounted facing the direction of vehicular travel.

Signs may be mounted on existing posts or buildings where the centerline of the sign is no more than 24" from the edge of the roadway.

Depth of bury shall be a *minimum* of 24" and rebar, a concrete footing, or another method to prevent removal of the sign is recommended. Footings for signs located in the public right-of-way shall be per the local jurisdiction's requirements.

DETAIL | SCALE: N.T.S. | 17

ATTACHMENT 10

Specifications for Fire Lane Entrance Signs
To be used only at *vehicle entry points* to areas that contain "Fire Lane—No Parking" signs or red curbs

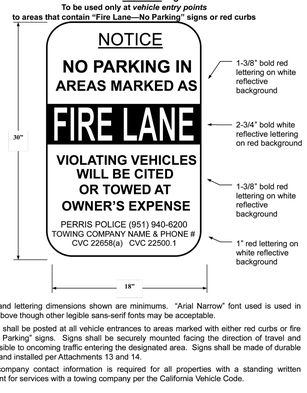

All sign and lettering dimensions shown are minimums. "Arial Narrow" font used is used in sample above though other legible sans-serif fonts may be acceptable.

This sign shall be posted at all vehicle entrances to areas marked with either red curbs or fire lane "No Parking" signs. Signs shall be securely mounted facing the direction of travel and clearly visible to oncoming traffic entering the designated area. Signs shall be made of durable material and installed per Attachments 13 and 14.

Towing company contact information is required for all properties with a standing written agreement for services with a towing company per the California Vehicle Code.

DETAIL | SCALE: N.T.S. | 13

ATTACHMENT 9

Fire Lane Identification – Red Curbs

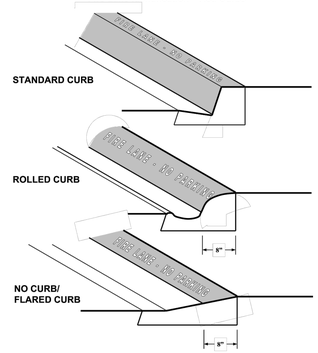

1. Fire lane entrance sign(s) shall also be provided per Attachment 10 or 11.
2. Curbs shall be painted OSHA safety red.
3. "FIRE LANE – NO PARKING" shall be painted on top of curb in 3" white lettering at a spacing of 30' on center or portion thereof.

DETAIL | SCALE: N.T.S. | 9

ATTACHMENT 1

Perris OFM Access & Water Plan Notes

All of the notes listed in the INSPECTION REQUIREMENTS and GENERAL REQUIREMENTS sections shall be placed, verbatim, on the plan under the heading "FIRE DEPARTMENT ACCESS & WATER NOTES."

INSPECTION REQUIREMENTS

1. Perris site inspections are required for this project. Please schedule all field inspections at least 48 hours in advance. Inspections canceled after 1 p.m. on the day before the scheduled date will be subject to a re-inspection fee. Call (951) 956-2117 to schedule an inspection.
2. A lumber drop inspection shall be performed prior to bringing combustible materials (or combustible fixtures and finishes for the structures of non-combustible construction). All-weather access roads capable of supporting 80,000 lbs., topped with asphalt, concrete, or equivalent shall be in place and hydrants operational at time of lumber drop inspection.
3. For projects with fuel modification, a vegetation clearance inspection is required prior to a lumber drop inspection. Use the fuel modification plan service request number to schedule the vegetation clearance inspection.
4. Phased installation of fire access roads requires additional inspections not covered by the fees paid at plan submittal. Call OFM (951) 956-2117 to schedule inspection to arrange for additional inspections that may be needed and any fees that may be due.
5. An original approved, signed, wet-stamped Perris fire access & water plan shall be available on-site at time of inspection.
6. Access roads and hydrants shall be maintained and remain clear of obstructions at all times during and after construction. Areas where parking is not permitted shall be clearly identified at all times. Obstruction of fire lanes and hydrants may result in cancellation or suspension of inspections.
7. Temporary fuel tanks of 60 or more gallons shall be reviewed, inspected, and permitted by the City of Perris OFM.
8. The project address shall be clearly posted and visible from the public road during construction.
9. All gates in construction fencing shall be equipped with either a Knox or breakaway padlock.
10. Buildings of four or more stories shall be provided with stairs and a standpipe before reaching 40 feet in height.

GENERAL REQUIREMENTS

11. Fire lane widths shall be measured from top face of the curb to top face of the curb for fire lanes with standard curbs and gutters and from flow-line to flow-line for fire lanes with modified curb designs (e.g., rolled, ramped, etc.). The developer is responsible to verify that all approved public works or grading department street improvement plans or precise grading plans conform to the minimum street width measurements per the approved Perris OFM access & water plan and standards identified in Perris OFM Access & Water Guideline for all portions of the fire access roads.
12. Permanent, temporary, and phased emergency access roads shall be designed and maintained to support an imposed load of 80,000 lbs. and surfaced to provide all-weather driving capabilities.
13. Fire lane signs and red curbs shall meet the specifications shown in Perris OFM Access & Water Guideline and shall be installed as described therein. Additional fire lane markings may be required at the time of inspection depending on field conditions.
14. All fire hydrants shall have a "Blue Reflective Pavement Marker" indicating their location per the Perris standard. On private property markers are to be maintained in good condition by the property owner.
15. Address numbers shall be located and be of a color and size so as to be plainly visible and legible from the roadway from which the building is addressed in accordance with Perris OFM Access & Water Guideline.
16. Access gates shall be approved prior to installation and shall be in compliance with Chapter 5 of the CFC and Perris OFM Access & Water Guideline.
17. Approved access walkways shall be provided to all required openings and all rescue windows.

18. Vegetation shall be selected and maintained in such a manner as to allow immediate access to all hydrants, valves, fire department connections, pull stations, extinguishers, sprinkler risers, alarm control panels, rescue windows, and other devices or areas used for firefighting purposes. Vegetation or building features shall not obstruct address numbers or inhibit the functioning of alarm bells, horns, or strobes.
19. Dumpsters and trash containers larger than 1.5 cubic yards shall not be stored in buildings or placed within 5 feet of combustible walls, openings or combustible roof eave lines unless protected by an approved sprinkler system.
20. Any future modification to the approved OFM Access & Water Plan or approved site plan, including but not limited to road width, grade, speed humps, turning radii, gates or other obstructions, shall require review, inspection, and approval by the City of Perris OFM.
21. Approval of this plan shall not be construed as approval of any information or project conditions other than those items and requirements identified in Perris OFM Access & Water Guideline and related portions of the CFC and CBC. This project may be subject to additional requirements not stated herein upon examination of actual site and project conditions or disclosure of additional information.

FIRE DEPARTMENT ACCESS & WATER NOTES | SCALE: N.T.S. | 1

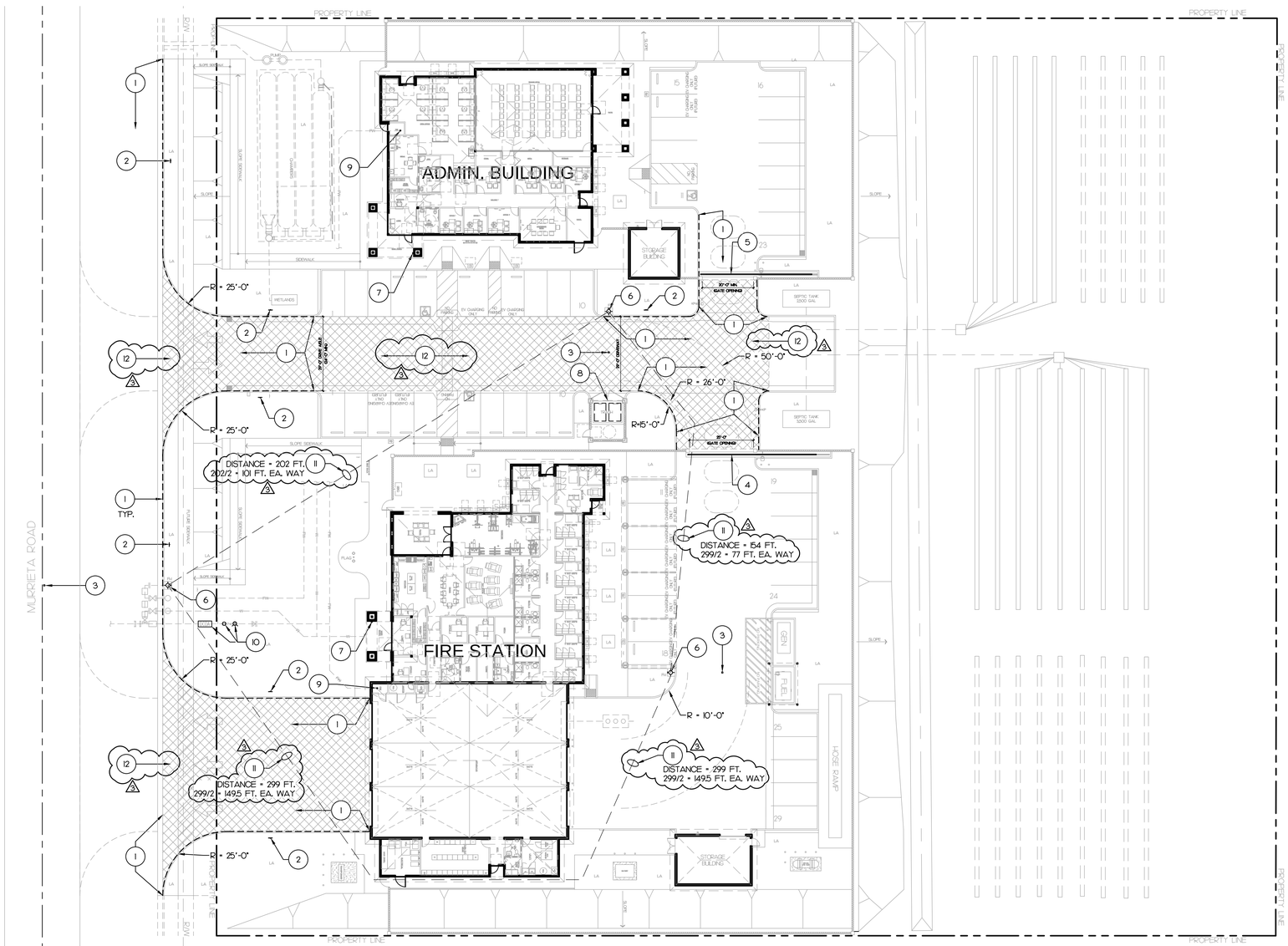

FIRE ACCESS PLAN | SCALE: 1"=20'-0" | 8

1. PAINT CURB RED & MARKINGS, SEE 9/A1.0 - FIELD VERIFY.
2. FIRE LANE - NO PARKING SIGN, TYP. OF 7 - SEE 13/A1.0 & 17/A1.0. FIELD VERIFY.
3. BLUE DOT FIRE HYDRANT MARKER - TYP. OF 3. HYDRANT MARKERS SHALL BE OFFSET 6" FROM THE ADJACENT CENTERLINE, LANE STRIPE, OR ADGE LINE - FIELD VERIFY.
4. MOTORIZED ROLLING GATE & COMPONENTS - SEE 5/A1.3.
5. MOTORIZED ROLLING GATE & COMPONENTS - SEE 9/A1.4.
6. FIRE HYDRANT, TYP. OF 3 - SEE CIVIL.
7. FIRE DEPT. KNOX BOX® 3200 SERIES SHALL BE MOUNTED ON THE WALL, SO THE TOP IS 6 FEET FROM THE FINISHED FLOOR CEMENT SURFACE - FIELD VERIFY. KNOX BOX CAN BE PURCHASED ONLINE AT WWW.KNOXBOX.COM. SEARCH FOR RIVERSIDE COUNTY FIRE DEPT. ON THE BUY SECTION OF THE WEB SITE AND SELECT HIGH SECURITY. FOR ANY QUESTIONS ABOUT ORDERING PLEASE CONTACT AT 760-863-8886. CFC 506.1
8. TRASH ENCLOSURE & COVERED CANOPY - SEE 2/A1.2.
9. FIRE SPRINKLER RISER - SEE CIVIL.
10. DOUBLE CHECK DETECTOR ASSEMBLY, FDC & PIV - SEE CIVIL.
11. PATH OF HOSE PULL. (2)
12. DEDICATED FIRE LANE SHOWN IN CROSS-HATCH AREA - TYP.

KEY NOTE (11)

A. SEE 1/A1.0 FOR CITY OF PERRIS FIRE & WATER ACCESS PLAN NOTES.

B. SEE REVISED DETAILS 5/A1.3 & 9/A1.4 FOR CITY OF PERRIS FIRE ACCESS NOTES FOR ELECTRICALLY OPERATED GATES. (3)

GENERAL NOTES

STK
SOLUTIONS INC.
42095 ZEVO DR., TEMECULA, CALIFORNIA 92590-3780
Phone: 951.296.9110 Fax: 951.296.6079 Email: stk@stkinc.com

CONSULTANT:

REVIEWED FOR CODE COMPLIANCE

THESE PLANS AND DOCUMENTS HAVE BEEN REVIEWED AND FOUND TO BE IN COMPLIANCE WITH THE CODES AND ORDINANCES OF THE JURISDICTION. ISSUANCE OF A PERMIT IS RECOMMENDED, SUBJECT TO APPROVAL BY OTHER DEPARTMENTS AND ANY NOTED CONDITIONS. THE APPROVAL OF THESE PLANS AND DOCUMENTS DOES NOT AUTHORIZE THE APPROVAL OF ANY VIOLATIONS OF APPLICABLE CODES AND STANDARDS, NOR RELIEVE THE OWNER, DESIGN PROFESSIONAL OF RECORD, OR CONTRACTOR OF RESPONSIBILITY FOR COMPLYING WITH APPLICABLE CODES AND STANDARDS. THE DOCUMENTS DOES NOT AUTHORIZE CONSTRUCTION THAT IS DESIGNED IN VIOLATION OF ANY FEDERAL, STATE OR LOCAL REGULATION.

BUILDING BUREAU VOLUNTEER, INC.
REVIEWED BY: STEVEN MA, PE, CASp

THIS SET OF THE PLANS AND SPECIFICATIONS MUST BE KEPT ON THE JOB SITE AT ALL TIMES DURING CONSTRUCTION. ANY CHANGES, MODIFICATIONS OR DEVIATIONS FROM THESE APPROVED PLANS AND SPECIFICATIONS MUST BE APPROVED BY ALL APPLICABLE DEPARTMENTS.

PROJECT ADMINISTERED BY:
CITY OF PERRIS

101 NORTH "D" STREET
PERRIS, CA 92570

PROJECT NAME:
FIRE STATION 105 AND ADMINISTRATION BUILDING

PROJECT CIP: F077

2495 MURRIETA ROAD
PERRIS, CA 92585

ISSUE INFORMATION:

DATE:	INFORMATION:
11-26-25	95% CD SUBMITTAL
02-05-26	(1) 1st PC RESPONSE
02-19-26	(2) 2nd PC RESPONSE
02-22-26	(3) 3rd PC RESPONSE
04-27-26	(4) 4th PC RESPONSE

SHEET INFORMATION:

STK PROJECT NO.:	365-03-25
SCALE:	AS NOTED
DATE:	NOVEMBER 2025
PLOT DATE:	–
DRAWN BY:	JN

SEAL:



SHEET TITLE:
FIRE ACCESS PLAN

SHEET NO.:
A1.0
(2)

J:\365-City of Perris\365-03-25 South Perris Fire Station\Architecture\A1.0 - FIRE ACCESS PLAN.dwg
05/07/2026 9:34AM

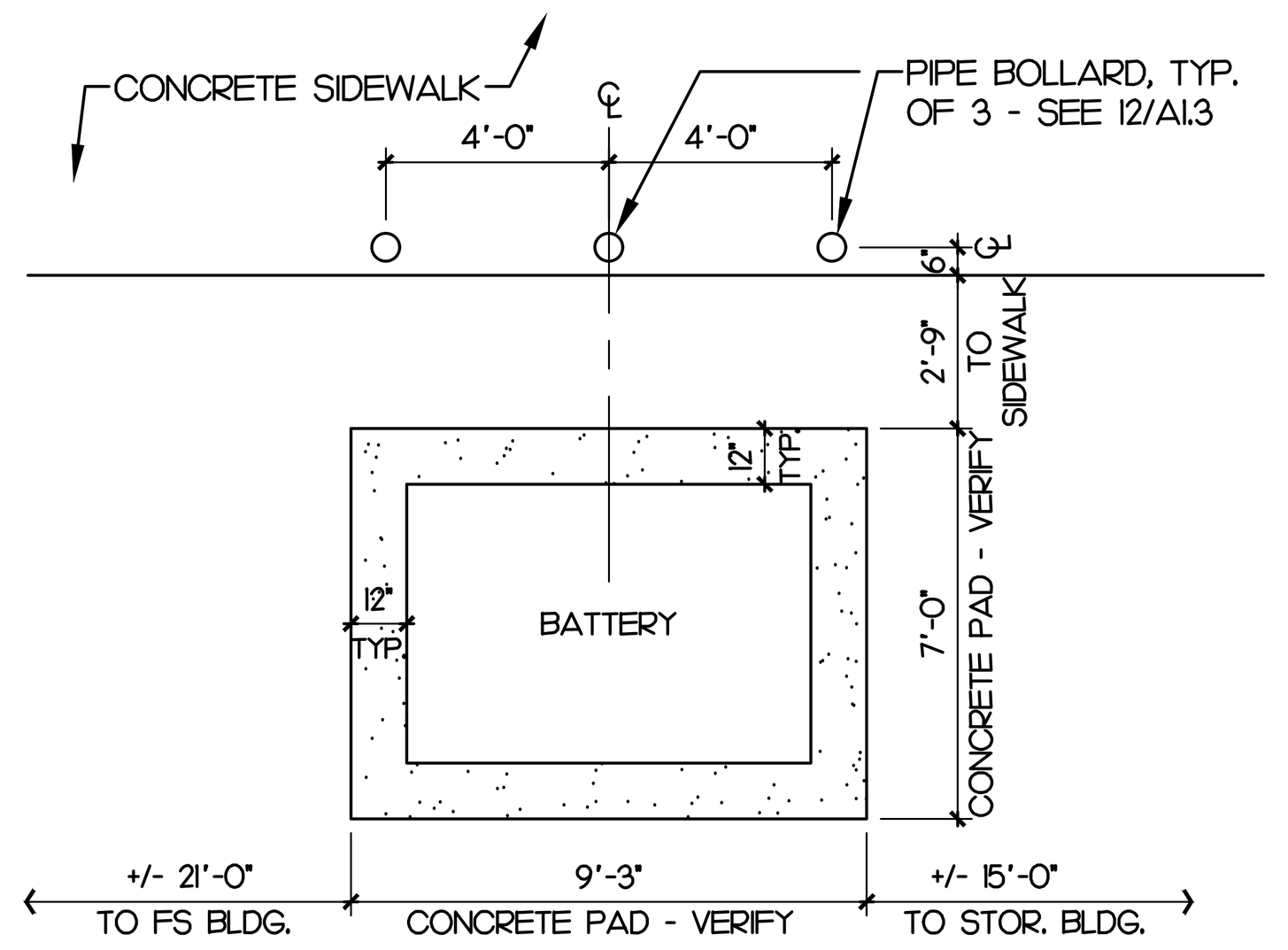

NOTES:
- BATTERY UNIT: SEE ELECT.
- CONCRETE PAD: FOR REFERENCE ONLY, AND MIGHT BE ENLARGED OR REDUCED BASED ON MANUFACTURER'S REQUIREMENTS. CONTRACTOR TO COORDINATE/ CONSTRUCT AT NO ADDED COST TO OWNER.

ENLARGED BATTERY PAD — SCALE: 1/4"=1'-0" — 17

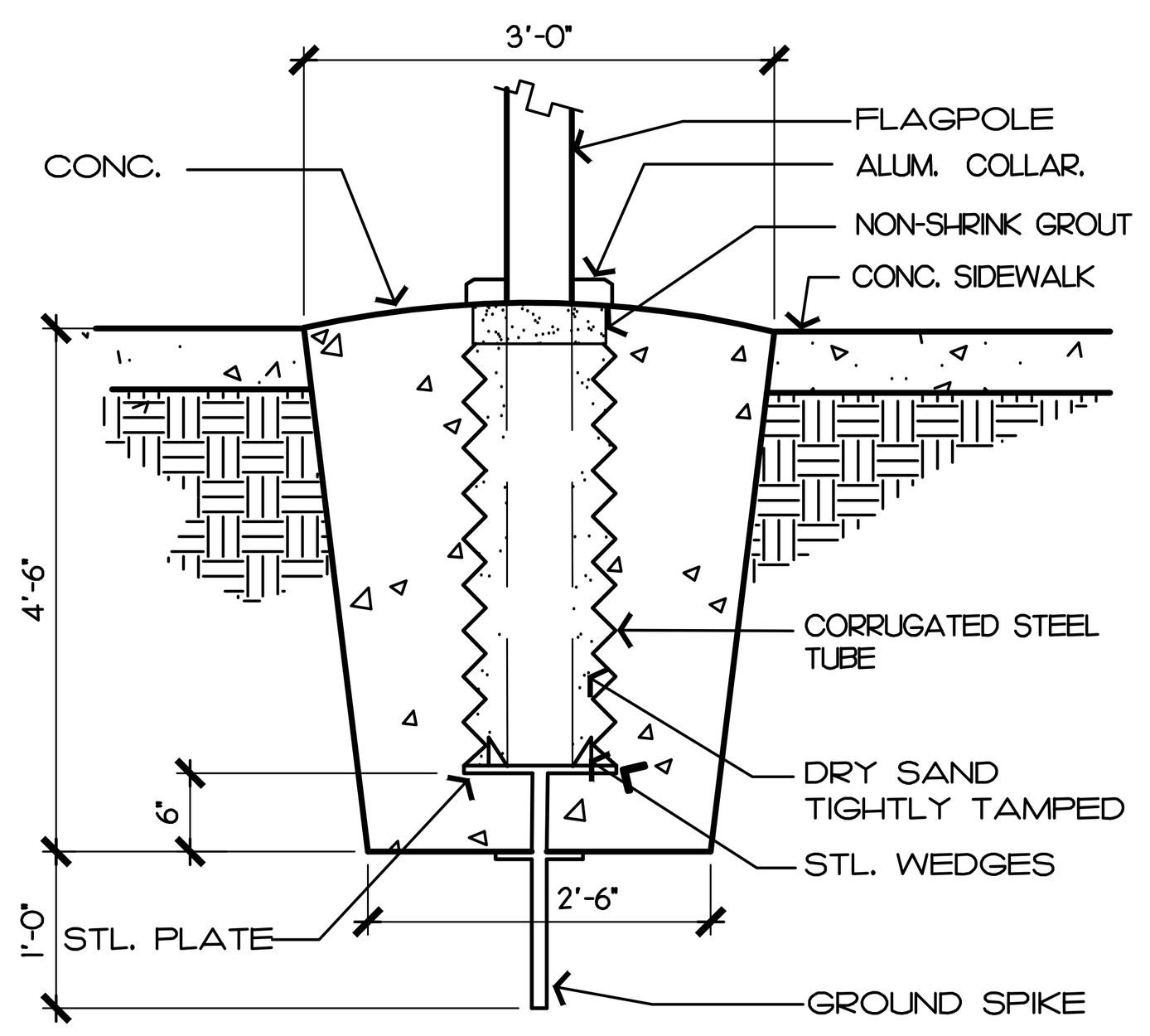

DEFERRED SUBMITTAL: DIMENSIONS SHOWN ARE APPROXIMATE, FOR BIDDING PURPOSES ONLY. PROVIDE ENGINEERING (STRUCTURAL CALCULATIONS) BY LICENSED PROFESSIONAL ENGINEER WHO IS APPROVED BY LOCAL JURISDICTION.

FLAG POLE — SCALE: N.T.S. — 13

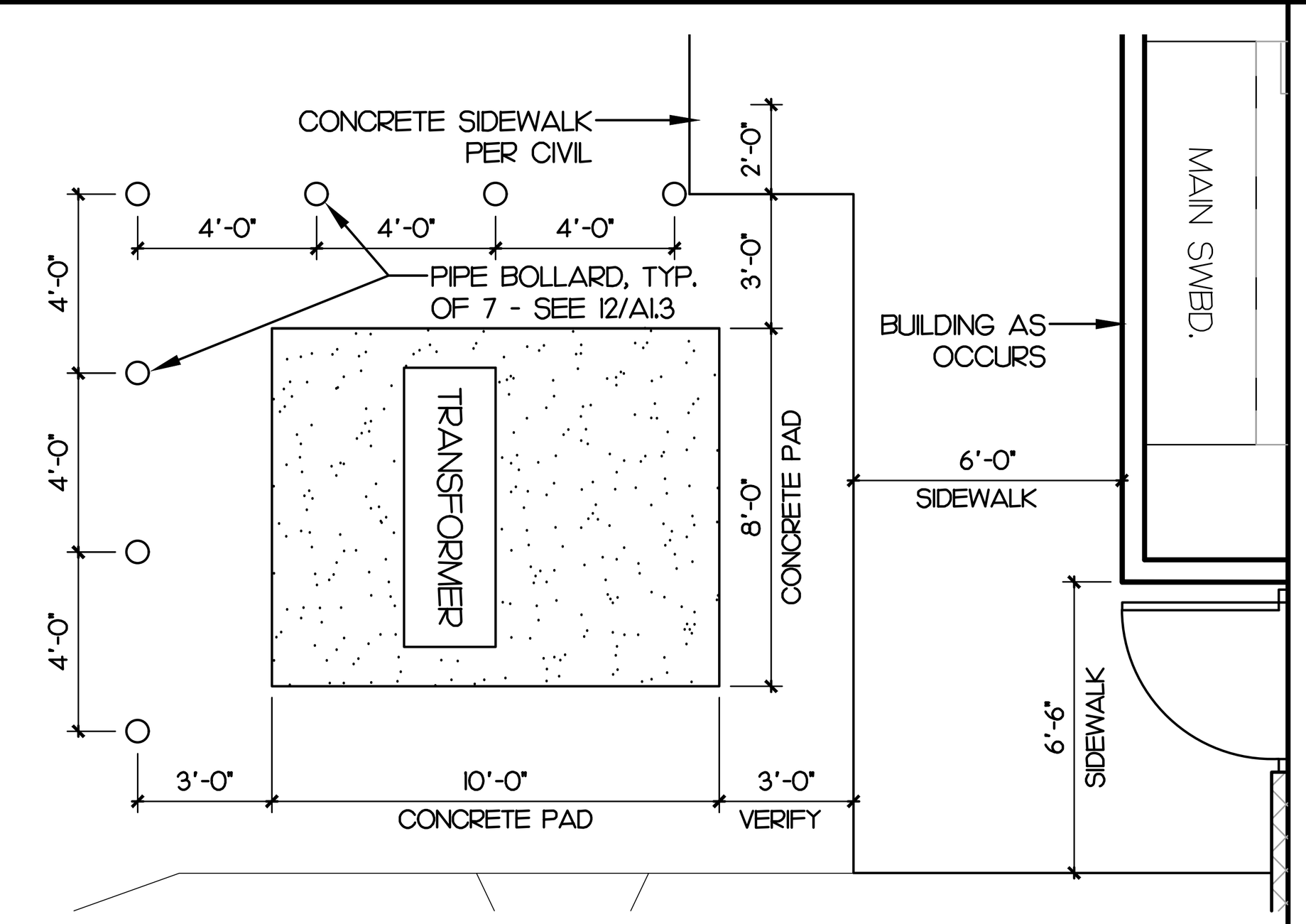

NOTES:
- TRANSFORMER: SEE ELECT.
- CONCRETE PAD: FOR REFERENCE ONLY, AND MIGHT BE ENLARGED OR REDUCED BASED ON SCE REQUIREMENTS. CONTRACTOR TO COORDINATE/CONSTRUCT AT NO ADDED COST TO OWNER.

ENLARGED TRANSFORMER — SCALE: 1/4"=1'-0" — 9

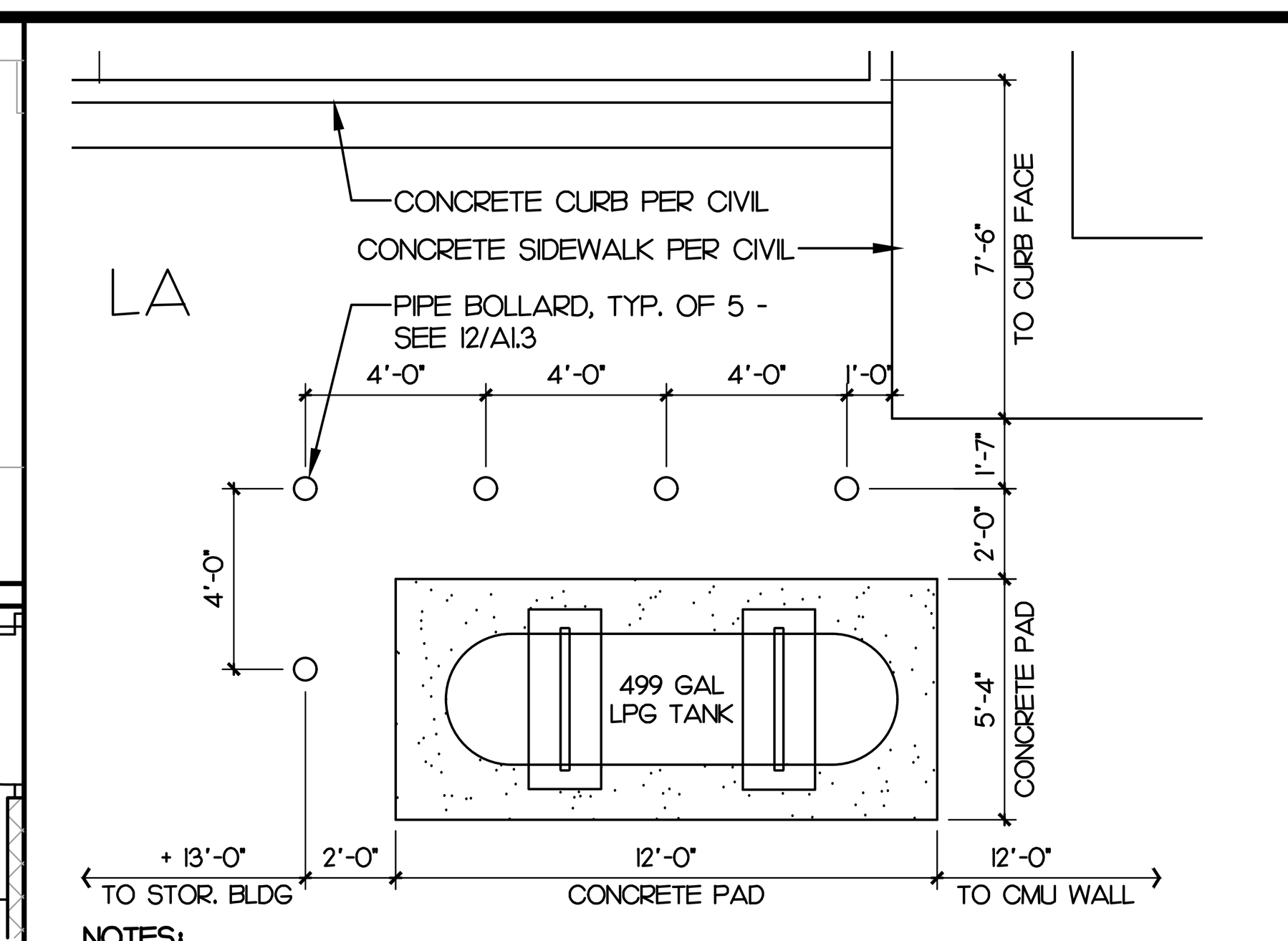

NOTES:
- LPG TANK: BY OWNER.
- CONCRETE PAD: FOR REFERENCE ONLY, AND MIGHT BE ENLARGED OR REDUCED BASED ON THE LPG TANK CHOSEN. CONTRACTOR TO COORDINATE/CONSTRUCT AT NO ADDED COST TO OWNER.
- PROVIDE MOUNTING SIMILAR TO DETAIL 12A/A1.2 AS REQUIRED.

ENLARGED LPG TANK — SCALE: 1/4"=1'-0" — 5

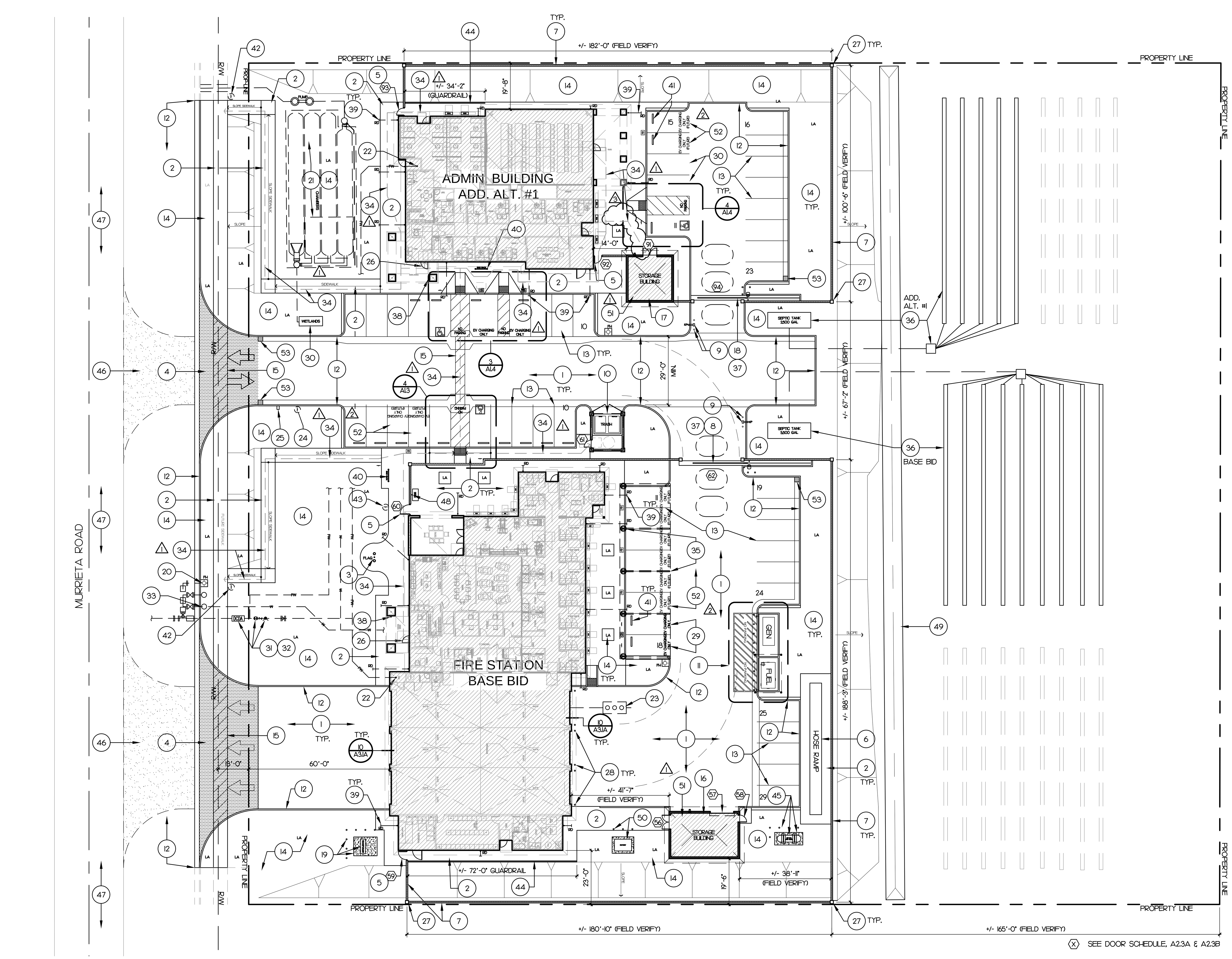

SITE PLAN — SCALE: 1"=20'-0" — 8

KEY NOTE

1. 9" CONCRETE PAVING (4,500 PSI) W/ #4 REBAR @ 24" O.C. EACH WAY AT MID-SLAB OVER 12" CLASS 2 BASE. PROVIDE SAWCUT CONTROL JOINTS (CJ) AT 10'-0" O.C. & EXPANSION JOINTS (EJ) AT 30'-0 O.C. PROVIDE PLAN OF PROPOSED LOCATIONS OF EXPANSION JOINTS & CONTROL JOINTS FOR APPROVAL PRIOR PLACING CONCRETE.
2. 4" CONCRETE SIDEWALK (4,500 PSI) W/ #4 REBAR @ 18" O.C. EACH WAY W/ EXPANSION JOINTS AT 15'-0" O.C. & CONTROL JOINTS AT 5'-0" O.C. (TYP.) - SEE
3. FLAGPOLE & BASE WITH UPLIGHTS - SEE 13/A1.1 & ELECT.
4. DRIVE APPROACH & GUTTER: 12" CONCRETE PAVING (4,500 PSI) W/ #4 REBAR @ 18" O.C. EACH WAY AT MID-SLAB OVER 6" CLASS 2 BASE. PROVIDE CONTROL JOINTS (CJ) AT 10'-0" O.C. AND EXPANSION JOINTS (EJ) AT 30'-0" O.C.
5. ORNAMENTAL METAL PERSONNEL GATE, TYP OF 4 - SEE 7/A1.3.
6. CONCRETE HOSE DRYING RAMP - SEE 4/A1.2.
7. SITE CMU WALL (w/ ANTIGRAFITTI COATING), CONCRETE CAP & FOOTING - SEE 1/A1.5.
8. ORNAMENTAL METAL MOTORIZED ROLLING GATE & COMPONENTS FOR FIRE STATION (BASE BID) - SEE 5/A1.3.
9. MOTORIZED GATE KEYPAD ON PEDESTAL (SEE ELECT. & 11/A1.3) & (2) PIPE BOLLARDS (SEE 12/A1.3) MOUNT KEYPAD AT +40" - FIELD VERIFY.
10. TRASH ENCLOSURE & COMPONENTS - SEE 2/A1.2.
11. ABOVE GROUND FUEL TANK, GENERATOR, CONCRETE CONTAINMENT POND, SHADE CANOPY, PIPE BOLLARDS & STRIPING - SEE 12/A1.2.
12. CONCRETE CURB OR CONCRETE CURB & GUTTER - SEE CIVIL.
13. PARKING LOT STRIPING.
14. LANDSCAPE & IRRIGATION - SEE LANDSCAPE DWGS.
15. ADA PATH OF TRAVEL: 4'-0" WIDE MIN. & 4" STRIPING @ 3'-0" O.C. OF CONTRASTING COLOR TO BACKGROUND/PAVEMENT.
16. STORAGE BUILDING FOR FIRE STATION (BASE BID) - SEE 10/A1.2.
17. STORAGE BUILDING FOR ADMINISTRATION BUILDING (ADD. ALT. #1) - SEE 7/A1.4.
18. ORNAMENTAL METAL MOTORIZED ROLLING GATE & COMPONENTS FOR ADMINISTRATION BUILDING (ADD. ALT. #1) - SEE 9/A1.4.
19. TRANSFORMER (SEE ELECT.), CONC. PAD & (7) PIPE BOLLARDS - SEE 9/A1.1.
20. FIRE HYDRANT, TYP. OF 3 - SEE CIVIL.
21. UNDERGROUND STORAGE CHAMBERS & COMPONENTS - SEE CIVIL.
22. FIRE SPRINKLER RISER - SEE CIVIL.
23. CLARIFIER - SEE CIVIL & PLUMBING.
24. VEHICLE TOW WARNING SIGN - SEE 6/A1.3.
25. MAIL BOX & POST PER SPECIFICATIONS. GENERAL CONTRACTOR TO COORDINATE LOCATION WITH LOCAL POSTMASTER. VERIFY WITH OWNER REGARDING MAIL DELIVERY METHOD, LOCATION, TYPE AND HEIGHT OF RURAL MAIL BOX IF REQUIRED.
26. PROVIDE A SIGN WHICH DISPLAYS THE INTERNATIONAL SYMBOL OF ACCESSIBILITY - SEE 8/A2.4.
27. 16" SQ. CMU PILASTER - TYP. OF 11. SEE 4C/A1.5.
28. PIPE BOLLARD - TYP. OF 6. SEE 12/A1.3.
29. ELECTRIC VEHICLE PARKING SPACES: PROVIDE ELECT. RACEWAY PER ELECT. PROVIDE THE COMPLETE INSTALLATION AS REQUIRED FOR THE CHARGERS & COMPONENTS INCLUDING STALL LABELINGS, SIGNS, POSTS, FOOTINGS, ETC.- FIELD VERIFY & SEE ELECT.
30. WETLANDS - SEE CIVIL.
31. DOUBLE CHECK DETECTOR ASSEMBLY - SEE CIVIL.
32. FDC & PIV - SEE CIVIL.
33. DOMESTIC WATER METER & BACKFLOW DEVICES - SEE CIVIL.
34. PATH OF TRAVEL / ACCESSIBILITY ROUTES:
    - A. THE RUNNING SLOPE OF WALKING SURFACES SHALL NOT BE STEEPER THAN 1:20. THE CROSS SLOPE OF WALKING SURFACES SHALL NOT BE STEEPER THAN 1:48. [CBC 11B-403.3]
    - B. THE CLEAR WIDTH FOR SIDEWALKS AND WALKS SHALL BE 48 INCHES MINIMUM. [CBC 11B 403.5.1]
    - C. FLOOR AND GROUND SURFACES SHALL BE STABLE, FIRM AND SLIP RESISTANT. [CBC 11B 302.1]
    - D. CHANGES IN LEVEL OF 1/4 INCH HIGH MAXIMUM SHALL BE PERMITTED TO BE VERTICAL AND WITHOUT EDGE TREATMENT. CHANGES IN LEVEL BETWEEN 1/4 INCH HIGH MINIMUM AND 1/2 INCH HIGH MAXIMUM SHALL BE BEVELED WITH A SLOPE NOT STEEPER THAN 1:2. [CBC 11B 302.2-3]
    - E. OBJECTS WITH LEADING EDGES MORE THAN 27 INCHES AND NOT MORE THAN 80 INCHES ABOVE THE FINISH FLOOR OR GROUND SHALL PROTRUDE 4 INCHES MAXIMUM HORIZONTALLY INTO THE CIRCULATION PATH. [CBC 11B-307.2]
    - F. VERTICAL CLEARANCE SHALL BE 80 INCHES HIGH MINIMUM. [CBC 11B-307.4]
    - G. AN ACCESSIBLE ROUTE WITH A CLEAR WIDTH LESS THAN 60 INCHES SHALL PROVIDE PASSING SPACES AT INTERVALS OF 200 FEET MAXIMUM. PASSING SPACE SHALL BE EITHER 60"X60" MINIMUM OR INTERSECTION OF TWO WALKING SURFACES PROVIDING A T-SHAPE SPACE. △1
35. PREFABRICATED CANOPY & COMPONENTS - SEE SHEET A1.6 / SEPARATE PERMIT.
36. ON-SITE WASTEWATER TREATMENT SYSTEM - SEE SHEET D-1.
37. PROVIDE FIRE DEPARTMENT KNOX KEY SWITCH AT MOTORIZED VEHICLE GATE. THE KNOX KEY SWITCH SHALL BE MOUNTED ON THE ENTRY SIDE OF THE GATE FACING THE STREET AT THE CALLBOX, KEYPAD OR EQUIVALENT AND PLACED BETWEEN 42" AND 48" ABOVE THE ROADWAY SURFACE. KNOX KEY SWITCHES MAY NEED TO BE INSTALLED ON THE EGRESS SIDE OF THE GATES IN LIEU OF THE INDUCTIVE LOOP VEHICLE DETECTOR IF NOT PRESENT. CFC 503.6
38. FIRE DEPT. KNOX BOX: 3200 SERIES SHALL BE MOUNTED ON THE WALL, SO THE TOP IS 6 FEET FROM THE FINISHED FLOOR CEMENT SURFACE - FIELD VERIFY. KNOX BOX CAN BE PURCHASED ONLINE AT www.knoxbox.com. SEARCH FOR RIVERSIDE COUNTY FIRE DEPT. ON THE BUY SECTION OF THE WEB SITE AND SELECT HIGH SECURITY. FOR ANY QUESTIONS ABOUT ORDERING PLEASE CONTACT AT 760-863-8886. CFC 506.1
39. ROOF DRAINS UNDER CONC. SLAB TO UNDERGROUND STORMDRAINS - SEE CIVIL & DETAIL 20/A1.3. FIELD VERIFY EXACT LOCATIONS.
40. BIKE RACK & COMPONENTS ON CONC. PAVING - SEE SPECS. INSTALL PER MANUF.'S RECOMMENDATIONS.
41. CONCRETE WHEEL STOP - TYP. OF 18.
42. PROVIDE LEFT/RIGHT DIRECTIONAL ACCESSIBLE ROUTE SIGNS - FIELD VERIFY. SEE 16A & 16B/A1.5.
43. PROVIDE DIRECTIONAL ACCESSIBLE ENTRANCE SIGN - SEE 16C/A1.5.
44. GALVANIZED PIPE GUARDRAIL - SEE 8/A1.4.
45. LPG TANK, CONCRETE PAD & PIPE BOLLARDS - SEE 5/A1.1.
46. NEW 4" A.C. PAVING & BASE / MATCH WITH EXISTING - SEE CIVIL.
47. EXISTING A.C. PAVING / ROAD TO REMAIN/PROTECT. MODIFY/REPAIR AS REQUIRED IF DAMAGE BY NEW CONSTRUCTION - FIELD VERIFY & SEE CIVIL.
48. GAS STUB FOR BBQ - SEE PLUMBING.
49. CONCRETE RIBBON GUTTER - SEE CIVIL.
50. BACKUP BATTERY (AND COMPONENTS) ON 4" MIN. RAISED CONCRETE PAD & (3) PIPE BOLLARDS - SEE 17/A1.1 & ELECT.
51. SECURE BICYCLE PARKING/STORAGE. △1
52. EV CAPABLE SPACES FOR FUTURE ONLY. △2
53. CATCH BASIN, TYP. OF 4 - SEE CIVIL.

GENERAL NOTES

ALL DIMENSIONS SHOWN ON THIS SHEET ARE FOR PLAN CHECK PURPOSES ONLY.
△2 - SEE CIVIL DRAWINGS FOR ALL SITE DIMENSIONS.

PARKING COUNT - FIRE STATION:

TOTAL NUMBER OF PARKING SPACES	=	29
HANDICAP PARKING SPACES	=	1
EV CAPABLE VEHICLE SPACES	=	8
△2 EV CHARGING STALLS PROVIDED	=	2

PARKING COUNT - ADMIN. BUILDING:

TOTAL NUMBER OF PARKING SPACES	=	23
HANDICAP PARKING SPACES	=	2
EV CAPABLE VEHICLE SPACES	=	2
EV CHARGING STALLS PROVIDED	=	2 △2

STK ARCHITECTURE, INC.
42095 ZEVO DR., TEMECULA, CALIFORNIA 92590-3780
Phone: 951.296.9110 Fax: 951.296.6079 Email: stk@stkinc.com

CONSULTANT:

REVIEWED FOR CODE COMPLIANCE

THESE PLANS AND DOCUMENTS HAVE BEEN REVIEWED AND FOUND TO BE IN COMPLIANCE WITH THE APPLICABLE CODE REQUIREMENTS OF THE JURISDICTION. ISSUANCE OF A PERMIT IS RECOMMENDED, SUBJECT TO APPROVAL BY OTHER DEPARTMENTS AND ANY NOTED CONDITIONS. THE STAMPING OF THESE PLANS SHALL NOT BE HELD TO PERMIT OR BE AN APPROVAL OF ANY VIOLATION OF APPLICABLE CODES AND STANDARDS, NOR RELIEVE THE OWNER, DESIGN PROFESSIONAL OF RECORD, OR CONTRACTOR OF COMPLIANCE WITH THE APPLICABLE CODES AND STANDARDS. PLAN REVIEW OF DOCUMENTS DOES NOT AUTHORIZE CONSTRUCTION TO PROCEED IN VIOLATION OF ANY FEDERAL, STATE, OR LOCAL REGULATION.
BUILDING BUREAU SOLUTIONS, INC.
REVIEWED BY: STEVE KIM, PE, CASp
THIS SET OF THE PLANS AND SPECIFICATIONS MUST BE KEPT ON THE JOB SITE AT ALL TIMES AND IT IS UNLAWFUL TO MAKE ANY CHANGES OR ALTERATIONS WITHOUT PERMISSION FROM THE CITY. OCCUPANCY OF STRUCTURE(S) IS NOT PERMITTED UNTIL FINAL APPROVAL IS GRANTED BY ALL APPLICABLE DEPARTMENTS.
BBS BUILDING BUREAU SOLUTIONS INC.

PROJECT ADMINISTERED BY:

CITY OF PERRIS

101 NORTH "D" STREET
PERRIS, CA 92570

PROJECT NAME:

FIRE STATION 105 AND ADMINISTRATION BUILDING

PROJECT CIP: F077

2495 MURRIETA ROAD
PERRIS, CA 92585

ISSUE INFORMATION:

DATE:	INFORMATION:
11-26-25	95% CD SUBMITTAL
02-05-26	△1 1st PC RESPONSE
02-19-26	△2 2nd PC RESPONSE
02-22-26	△3 3rd PC RESPONSE
04-27-26	△4 4th PC RESPONSE

SHEET INFORMATION:

STK PROJECT NO.:	365-03-25
SCALE:	AS NOTED
DATE:	NOVEMBER 2025
PLOT DATE:	–
DRAWN BY:	JN

SEAL:

LICENSED ARCHITECT — ANTONIO FINALDI — No. C31476 — REN. 07-31-27 — STATE OF CALIFORNIA

SHEET TITLE:

SITE PLAN & DETAILS

SHEET NO.:

A1.1

J:\365-City of Perris\365-03-25 South Perris Fire Station\Architectural\A1.1 - SITE PLAN & DETAILS.dwg
05/04/2026 10:37AM

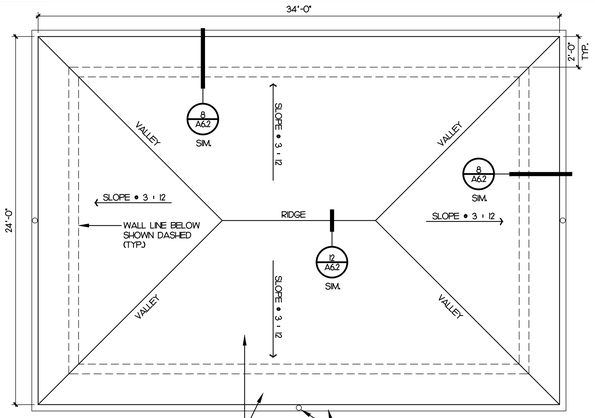

ROOF PLAN

STANDING SEAM METAL ROOF, TYP.

PREFINISHED ROOF GUTTER & DOWNSPOUT, DRAIN UNDER SIDEWALK & DAYLIGHT TO LANDSCAPE - SEE 20/A13 & CIVIL.

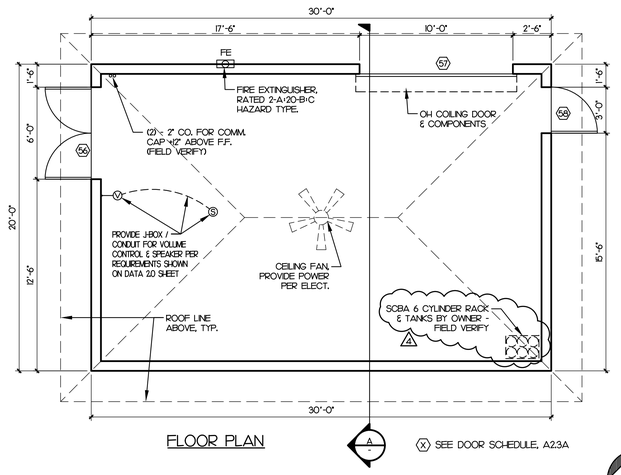

FLOOR PLAN

A

X SEE DOOR SCHEDULE, A2.3A

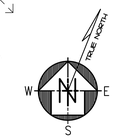

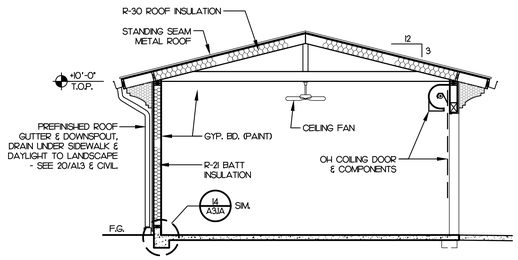

SECTION (A)

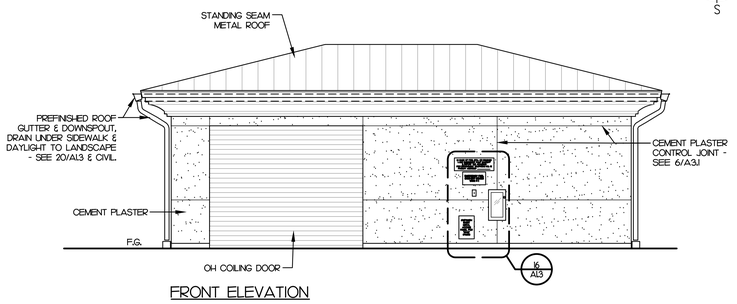

FRONT ELEVATION

STORAGE BUILDING AT FIRE STATION

SCALE: 1/4"=1'-0" | 10

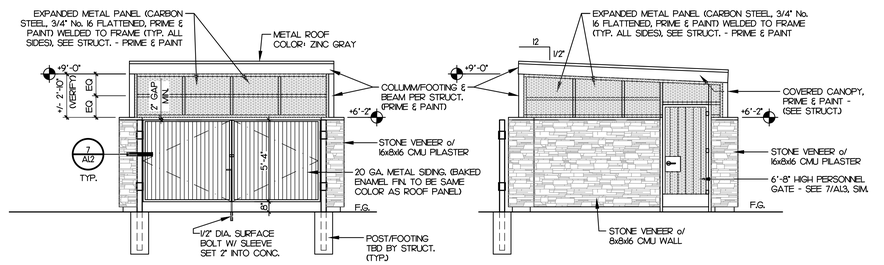

FRONT ELEVATION

SIDE ELEVATIONS (SIM.)

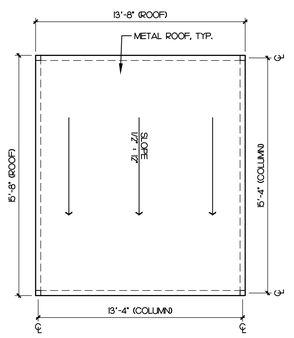

ROOF PLAN

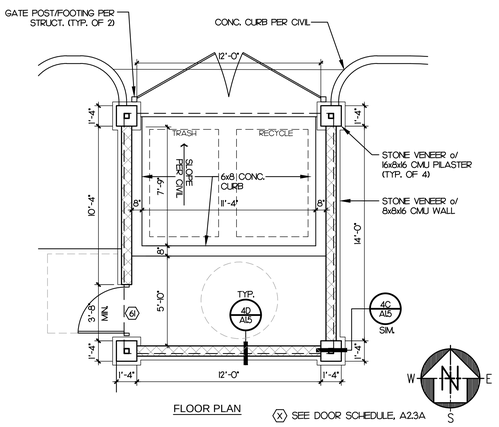

FLOOR PLAN

X SEE DOOR SCHEDULE, A2.3A

TRASH ENCLOSURE

SCALE: 1/4"=1'-0" | 2

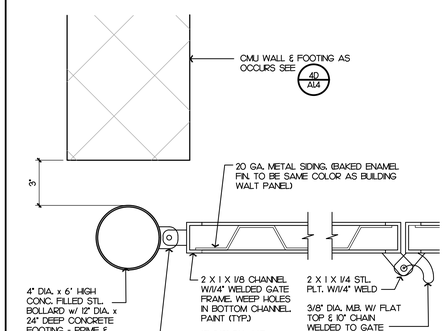

FLOOR PLAN

SCALE: 1/4"=1'-0"

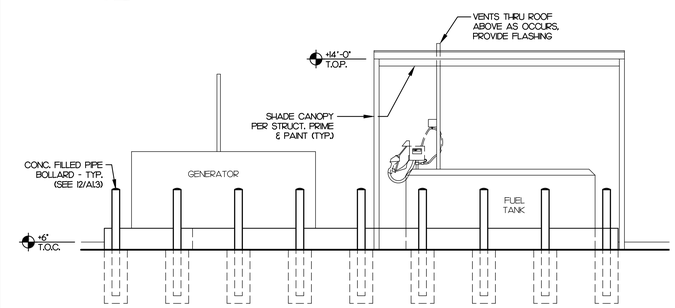

FRONT ELEVATION

SCALE: 1/4"=1'-0"

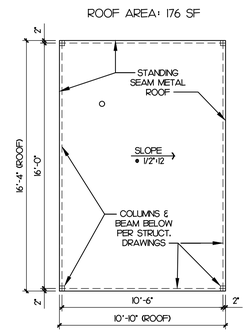

ROOF PLAN

SCALE: 1/4"=1'-0"

ENLARGED FUEL TANK / GENERATOR

SCALE: AS NOTED | 12

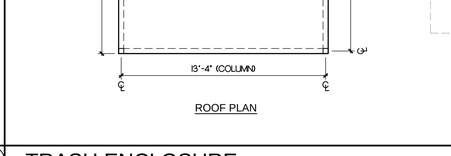

DETAIL

SCALE: 1"=1'-0" | 7



DETAIL

SCALE: N.T.S. | 3

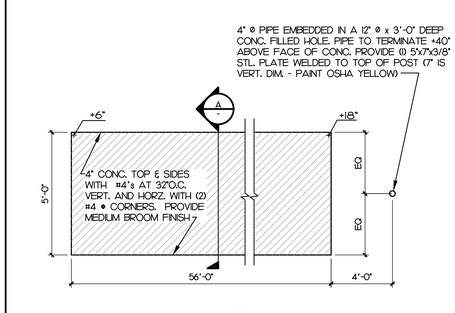

PLAN

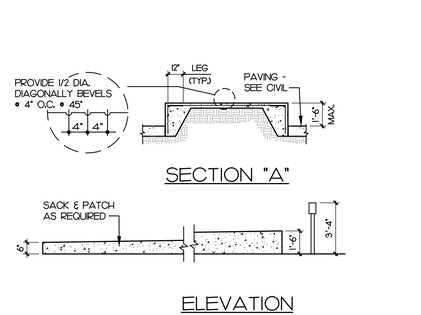

SECTION "A"

ELEVATION

HOSE DRYING RAMP

SCALE: N.T.S. | 4

STK
SAN DIEGO | IRVINE, CA
42095 ZEVO DR., TEMECULA, CALIFORNIA 92590-3780
Phone: 951.296.9110 Fax: 951.296.6079 Email: stk@stkinc.com

CONSULTANT:

REVIEWED FOR CODE COMPLIANCE

THESE PLANS AND DOCUMENTS HAVE BEEN REVIEWED AND FOUND TO BE IN COMPLIANCE WITH THE CODES ADOPTED BY THE CITY OF PERRIS JURISDICTION. ISSUANCE OF A PERMIT IS NOT IMMEDIATE, IS SUBJECT TO APPROVAL BY OTHER DEPARTMENTS AND ANY NOTED CONDITIONS THE PERMIT MUST BE OBTAINED PRIOR TO ANY CONSTRUCTION. REVIEW AND APPROVAL OF ANY VIOLATIONS OF APPLICABLE CODES AND STANDARDS, NOR RELIEVE THE OWNER, DESIGN PROFESSIONAL OF RECORD, OR CONTRACTOR OF RESPONSIBILITY FOR COMPLIANCE. THE APPROVAL OF CONSTRUCTION DOCUMENTS DOES NOT AUTHORIZE CONSTRUCTION IN VIOLATION OF ANY FEDERAL, STATE OR LOCAL REGULATIONS.

BUILDING BUREAU / ELECTRICAL
REVIEWED BY: STEVEN M. PAGE

THIS SET OF THE PLANS AND SPECIFICATIONS MUST BE KEPT ON THE JOB SITE AT ALL TIMES IT IS UNLAWFUL TO MAKE ANY CHANGES OR ALTERATIONS ON THE PLANS WITHOUT AUTHORIZATION FROM THE CITY DEPARTMENT FOR WHICH IT IS NOT APPROVED. A FAILURE TO MAKE THE CORRECTIONS AS NOTED BY ALL APPLICABLE DEPARTMENTS.

© COPYRIGHT STK SOLUTIONS INC.

PROJECT ADMINISTERED BY:
CITY OF PERRIS

101 NORTH "D" STREET
PERRIS, CA 92570

PROJECT NAME:
FIRE STATION 105 AND ADMINISTRATION BUILDING

PROJECT CIP: F077

2495 MURRIETA ROAD
PERRIS, CA 92585

ISSUE INFORMATION:

DATE:	INFORMATION:
11-26-25	95% CD SUBMITTAL
02-05-26	1 1st PC RESPONSE
02-19-26	2 2nd PC RESPONSE
04-27-26	4 4th PC RESPONSE

SHEET INFORMATION:

STK PROJECT NO.: 365-03-25
SCALE: AS NOTED
DATE: NOVEMBER 2025
PLOT DATE: –
DRAWN BY: JN

SEAL:

LICENSED ARCHITECT ANTONIO FINKLEA No. C31476 REN. 07-31-27 STATE OF CALIFORNIA

SHEET TITLE:

SITE DETAILS

SHEET NO.:

A1.2

J:\365 City of Perris\365-03-25 South Perris Fire Station\Architecture\A1.2 - SITE DETAILS.dwg
04/29/2026 9:59AM

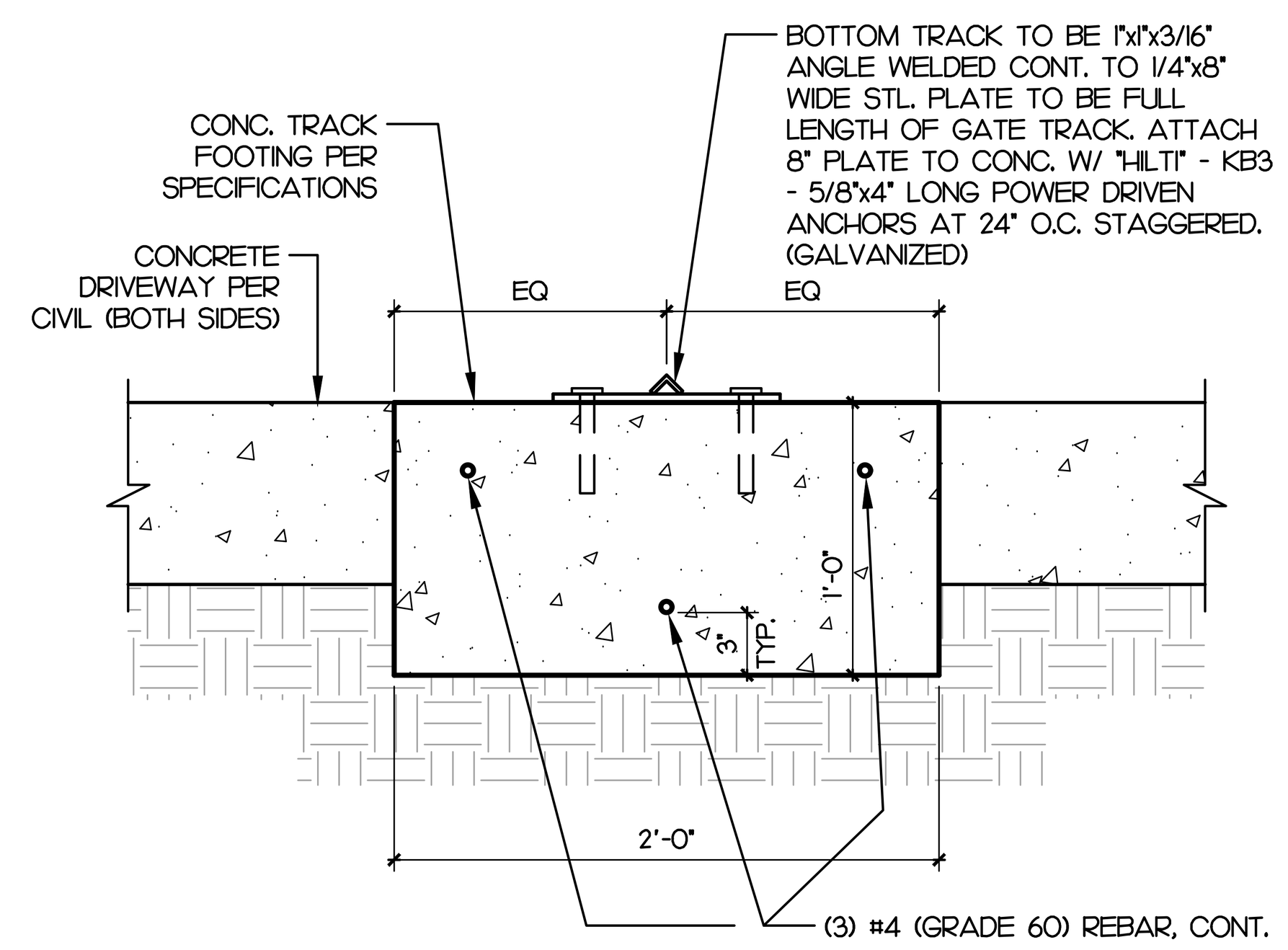

TRACK AT GATE OPENING — SCALE: 1-1/2"=1'-0" — 17

GENERAL GATE NOTES

ELECTRIC OPERATED W/ (1) 1-1/4 HP AC MOTOR W/ MOUSE PROOF ENCLOSURES. SEE SPECIFICATIONS.

PROVIDE GATE MOTOR W/ ADJUSTABLE AUTOMATIC TIMED GATE CLOSING DEVICE.

ALL GATE, OPERATOR & SAFETY FUNCTIONS SHALL COMPLY WITH UL 325 (NO EXCEPTIONS).

ALL GATE STEEL SHALL BE .12" THICK MIN. (TYP.).

ALL GATE COMPONENTS SHALL BE POWDER POLYESTER COATED. USE A TWO-COAT SYSTEM, PRIMER & POWDER TOP COAT W/ BLACK MATTE FINISH.

GATE PINS SHALL BE RATED WITH SHEAR PIN FORCE NOT TO EXCEED 30 FOOT POUNDS.

PROVIDE KNOX KEY SWITCH AS REQUIRED. CONTRACTOR TO OBTAIN ORDER FORM FROM THE RIVERSIDE COUNTY FIRE DEPARTMENT.

INSTALL (2) TWO PER GATE, 12GA ENGINEER-GRADE REFLECTIVE ALUMINUM (8.5" x 11") UL 325 (ENLISH/SPANISH) MOVING GATE WARNING SIGNS WITH 1/4" x .6" x 5/8" BRAZIER HEAD ALUMINUM DRIVE RIVETS BY HANSON RIVET & SUPPLY CO. (818.485-0500 / www.hansonrivet.com) OR APPROVED EQUAL. INSTALL 4 FASTENERS MIN. PER SIGN. FIELD VERIFY EXACT LOCATION.

THE INSTALLATION OF SECURITY GATES SHALL BE IN ACCORDANCE WITH UL-325 AND AMERICAN SOCIETY FOR TESTING AND MATERIALS (ASTM) F2200 STANDARDS.

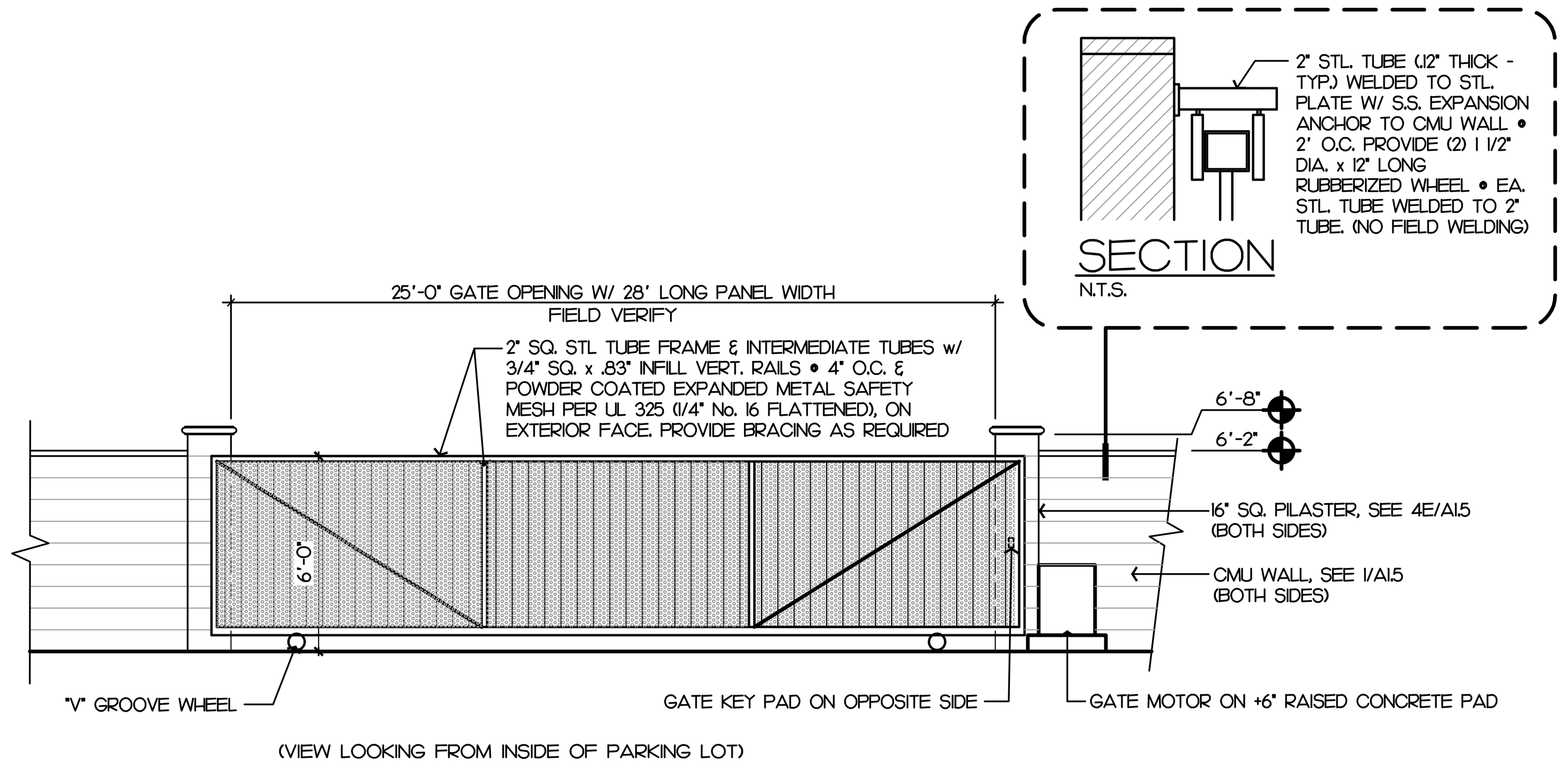

CITY OF PERRIS FIRE DEPT. ACCESS NOTES FOR ELECTRICALLY OPERATED GATES:

1. IN THE EVENT OF LOSS OF NORMAL POWER TO THE GATE OPERATING MECHANISM, IT SHALL BE AUTOMATICALLY TRANSFERRED TO A FAIL-SAFE MODE ALLOWING THE GATE TO BE PUSHED OPEN BY A SINGLE FIREFIGHTER WITHOUT ANY OTHER ACTIONS, KNOWLEDGE, OR MANIPULATION OF THE OPERATING MECHANISM BEING NECESSARY AND WITHOUT THE USE OF BATTERY BACK-UP POWER.
2. THE GATE CONTROL FOR ELECTRONIC GATES SHALL BE OPERABLE BY A KNOX EMERGENCY OVERRIDE KEY SWITCH (WITH DUST COVER). THE KEY SWITCH SHALL BE PLACED BETWEEN 42" AND 48" ABOVE THE ROADWAY SURFACE AT THE RIGHT SIDE OF THE ACCESS GATE WITHIN TWO FEET OF THE EDGE OF THE ROADWAY. THE KEY SWITCH SHALL BE READILY VISIBLE AND UNOBSTRUCTED FROM THE FIRE LANE LEADING TO THE GATE. THE KEY SWITCH SHALL BE CLEARLY LABELED "FIRE DEPT."
3. UPON ACTIVATION OF THE KEY SWITCH, THE GATE SHALL OPEN AND REMAIN OPEN UNTIL RETURNED TO NORMAL OPERATION BY MEANS OF THE KEY SWITCH. WHERE A GATE CONSISTS OF TWO LEAVES, THE KEY SWITCH SHALL OPEN BOTH SIMULTANEOUSLY IF OPERATION OF A SINGLE LEAF ON THE INGRESS SIDE DOES NOT PROVIDE FOR THE WIDTH, TURNING RADII, OR SETBACKS NECESSARY FOR FIRE APPARATUS TO NAVIGATE THE VEHICLE ENTRY POINT.
4. THE KEY SWITCH SHALL BE LABELED WITH A PERMANENT RED SIGN WITH NOT LESS THAN 1/2" CONTRASTING LETTERS READING "FIRE DEPT" OR WITH A "KNOX" DECAL.

MOTORIZED ROLLING GATE - FIRE STATION — SCALE: 1/4"=1'-0" — 5

KEY NOTE

1. CONCRETE CURB OR CURB & GUTTER - SEE CIVIL.
2. MOTORIZED ORNAMENTAL ROLLING GATE & CONCRETE TRACK - SEE 5/A1.3.
3. MOTORIZED GATE EXIT LOOP - FIELD VERIFY.
4. MOTORIZED GATE SAFETY LOOPS - FIELD VERIFY.
5. CONCRETE PAVING/DRIVEWAY - SEE CIVIL.
6. CONCRETE PAVING/SIDEWALK - SEE CIVIL.
7. SITE CMU WALL AS OCCURS - SEE 1/A1.5.
8. CMU PILASTER AS OCCURS ON BOTH SIDES - SEE 4C/A1.5.
9. GATE OPERATOR & PAD W/ CONCRETE PIPE BOLLARDS (TYP. OF 3) - SEE 12/A1.3.
10. RIBBON GUTTER & FLOW LINE PER CIVIL.
11. LANDSCAPE & IRRIGATION PER LANDSCAPE DWGS.
12. MOTORIZED GATE KEYPAD ON PEDESTAL (SEE ELECT. & 11/A1.3) & (2) PIPE BOLLARDS (SEE 12/A1.3) MOUNT KEYPAD AT +40" - FIELD VERIFY.
13. INTERNATIONAL SYMBOL OF ACCESSIBILITY - SEE 15/A1.3.
14. WHEEL STOP - SEE SPECS & CIVIL.
15. 12" HIGH LETTERS - PAINT WHITE.
16. 4" WIDE CONTRASTING COLOR STRIPING @ 3'-0" O.C.
17. ADA SIGN, MECHANICALLY ATTACHED TO CMU WALL - SEE 14/A1.3 SIM.
18. ADA PATH OF TRAVEL: 4'-0" WIDE MIN. & 4" STRIPING @ 3'-0" O.C. OF CONTRASTING COLOR TO BACKGROUND/PAVEMENT.
19. DETECTABLE WARNING SURFACING - SEE SPECS.
20. PARKING LOT STRIPING.

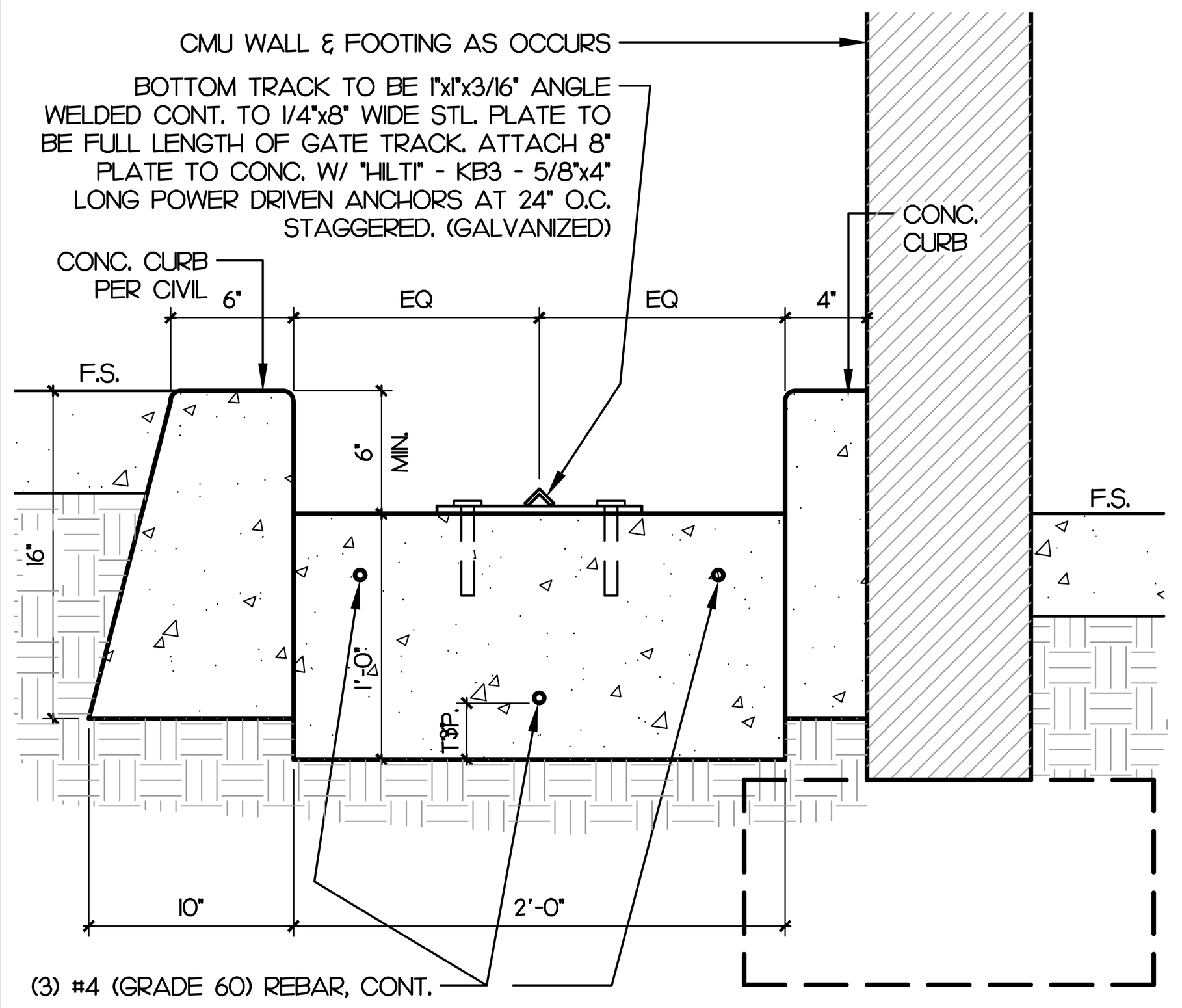

TRACK WITH POCKET — SCALE: 1-1/2"=1'-0" — 18

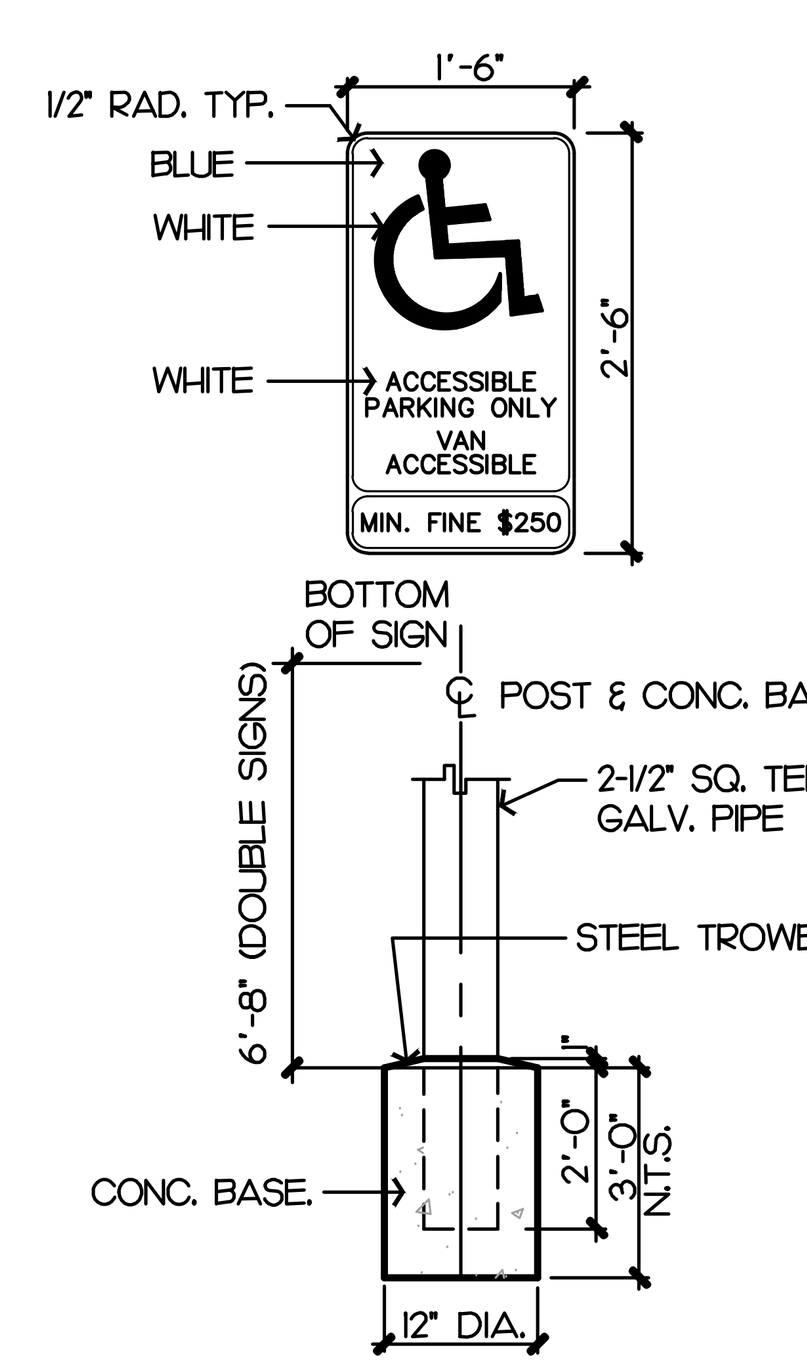

ADA VAN PARKING SIGN — SCALE: N.T.S. — 14

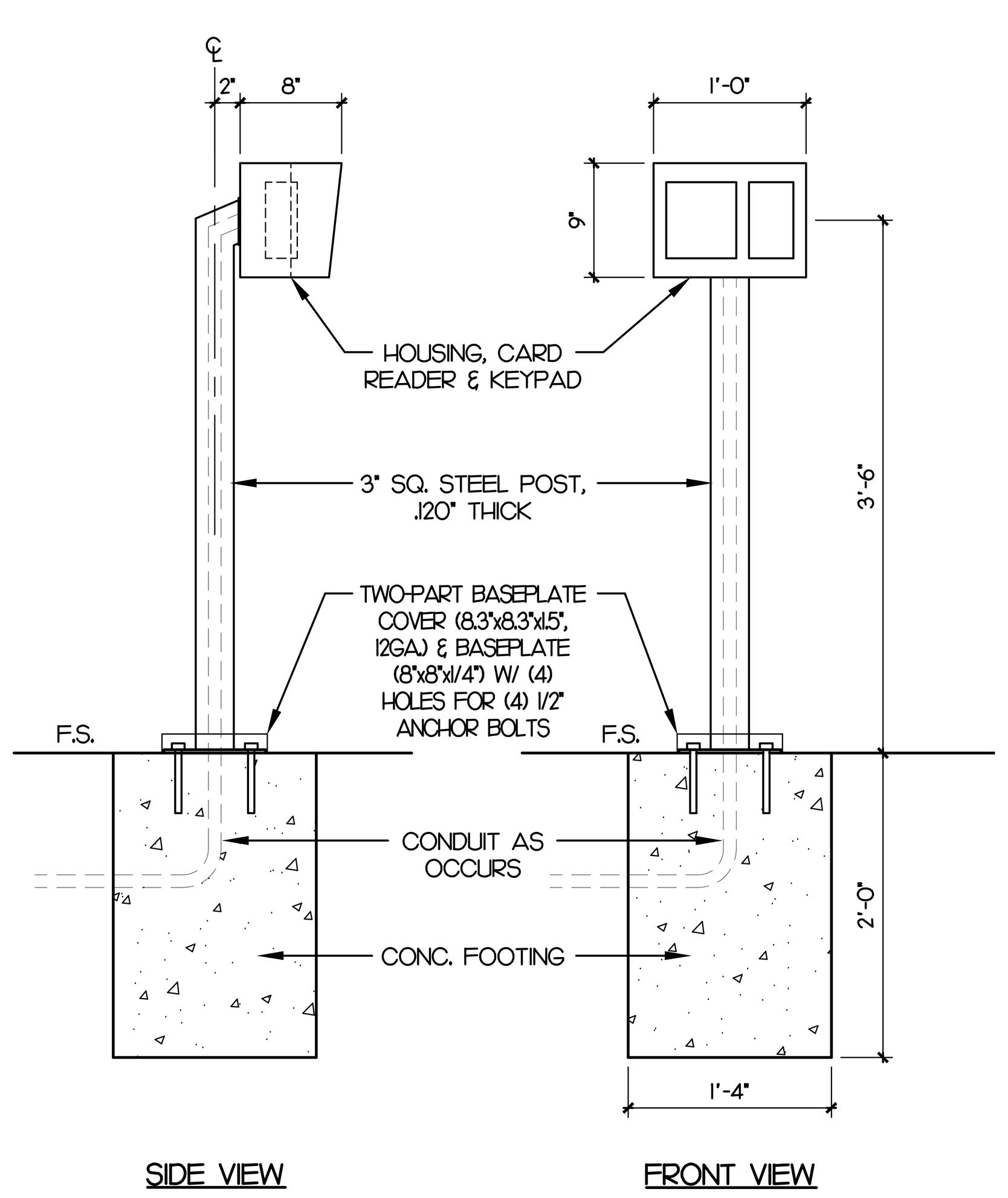

PEDESTAL DETAIL — SCALE: 1"=1'-0" — 11

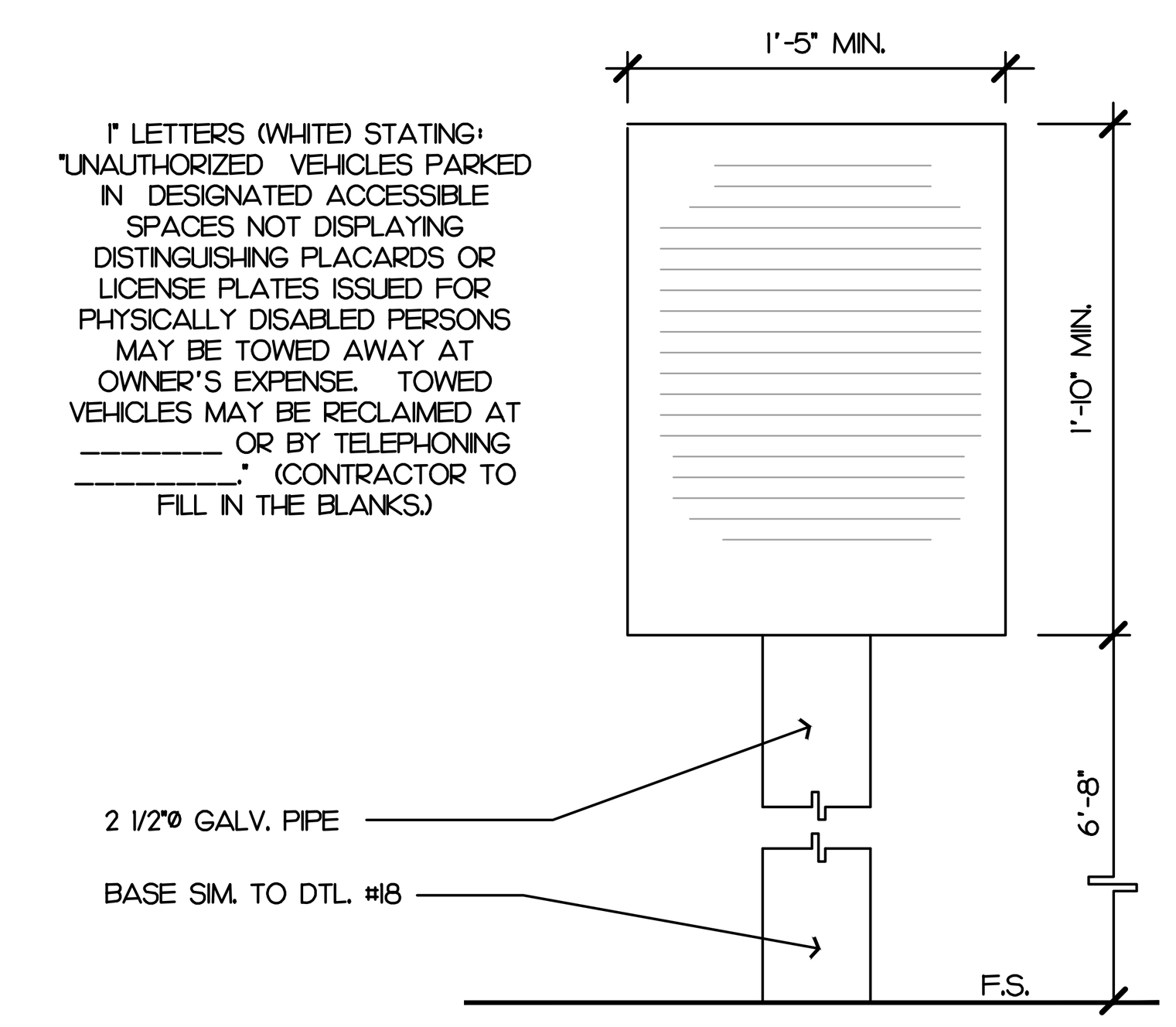

WARNING SIGN — SCALE: 1/4"=1'-0" — 6

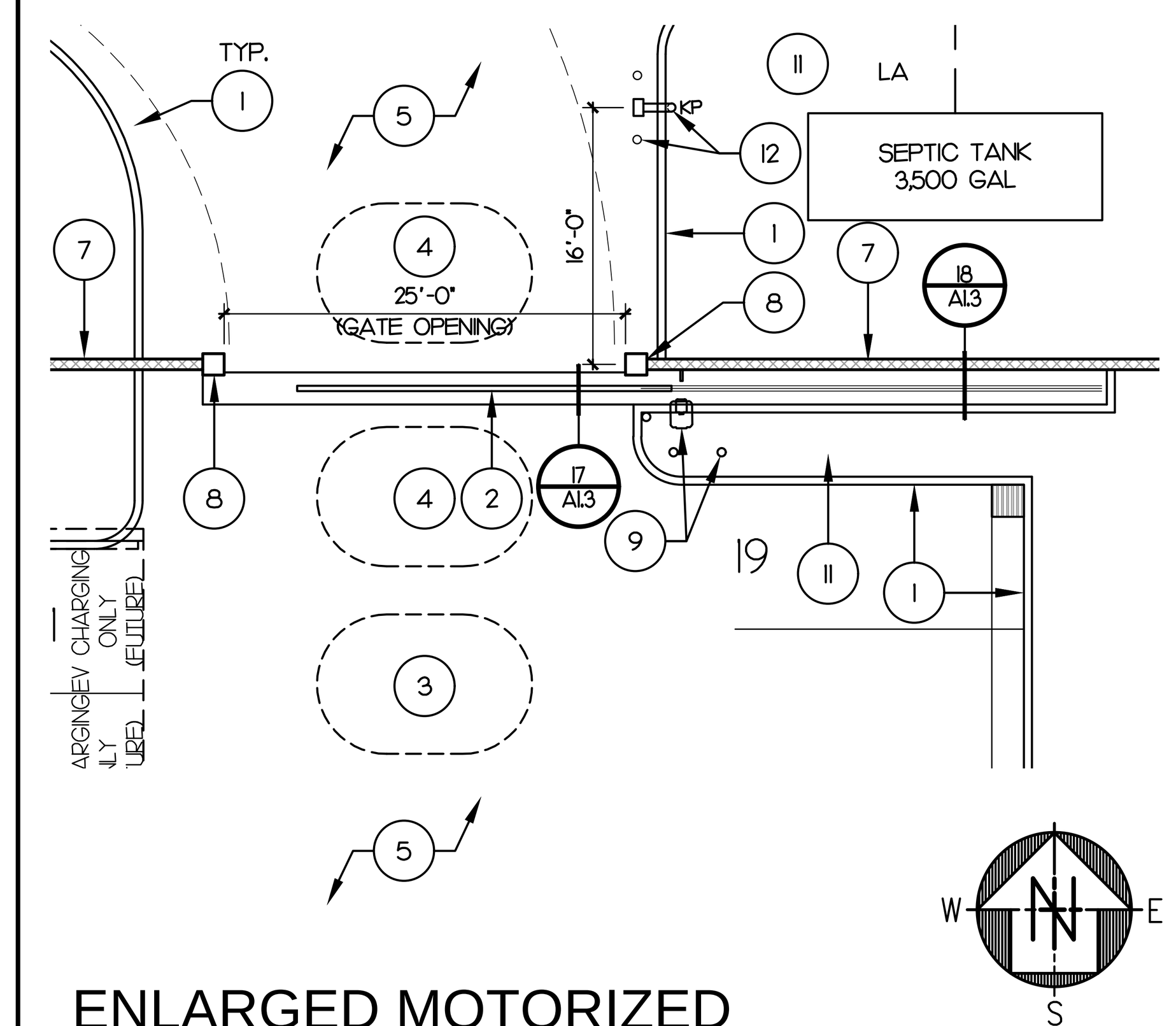

ENLARGED MOTORIZED GATE PLAN - FIRE STATION — SCALE: 1"=10'-0" — 2

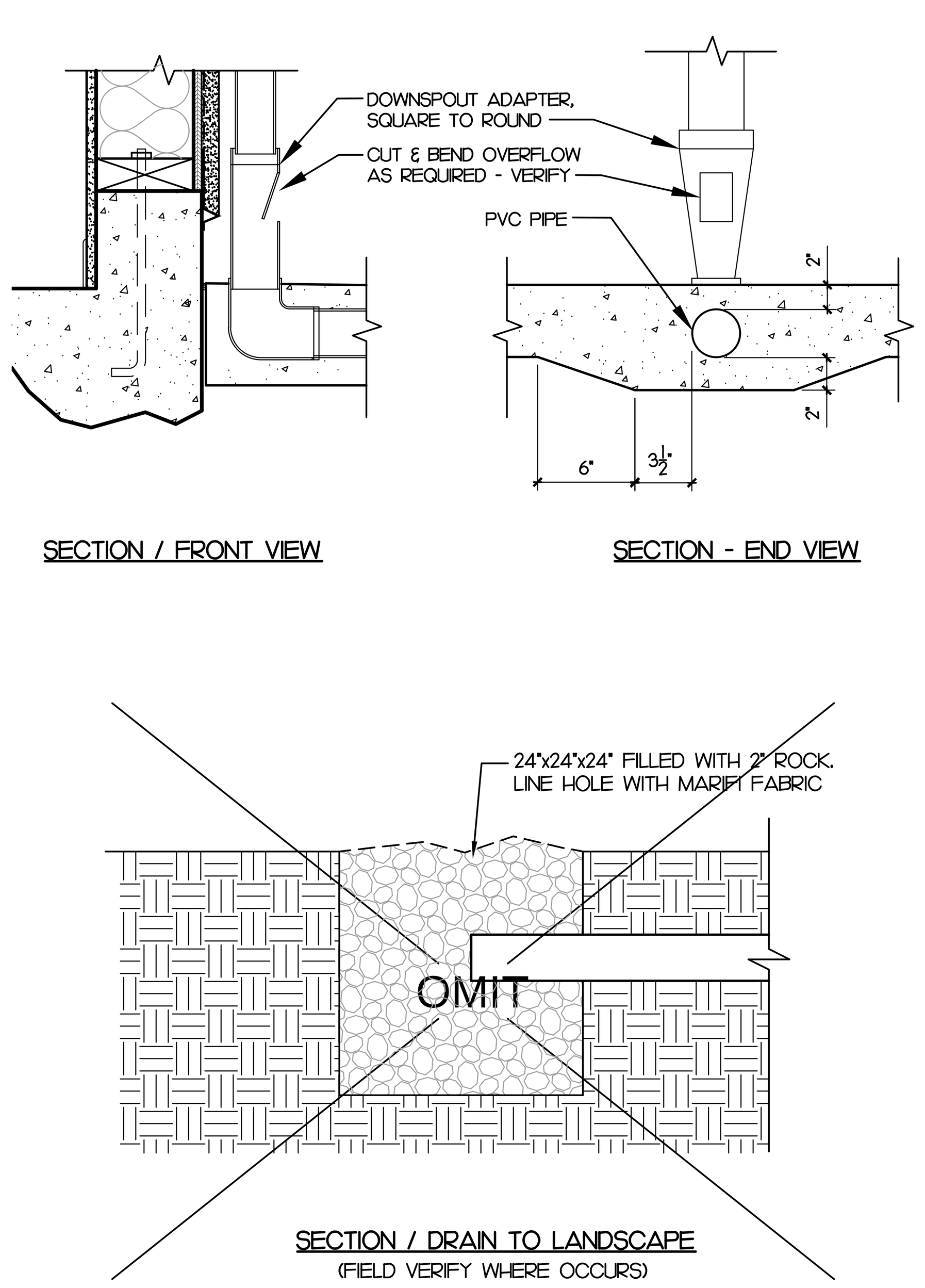

ROOF DRAIN DETAIL — SCALE: N.T.S. — 20

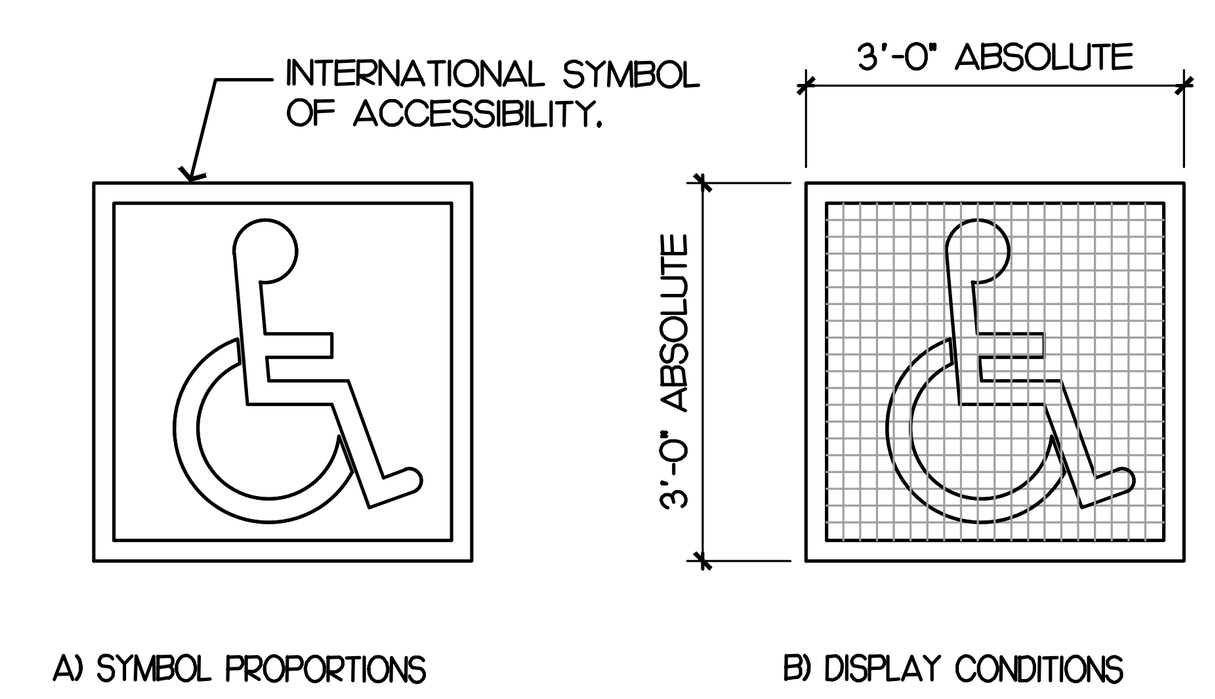

NOTES:

1. PAVEMENT SYMBOL SHALL BE PAINTED WHITE ON A BLUE BACKGROUND.
2. BLUE COLOR SHOULD MATCH COLOR # 15090 IN THE FEDERAL STANDARD 595a AS SPECIFIED IN SECTION 522(b)2.

ACCESSIBILITY SYMBOL — SCALE: 1/2"=1'-0" — 15

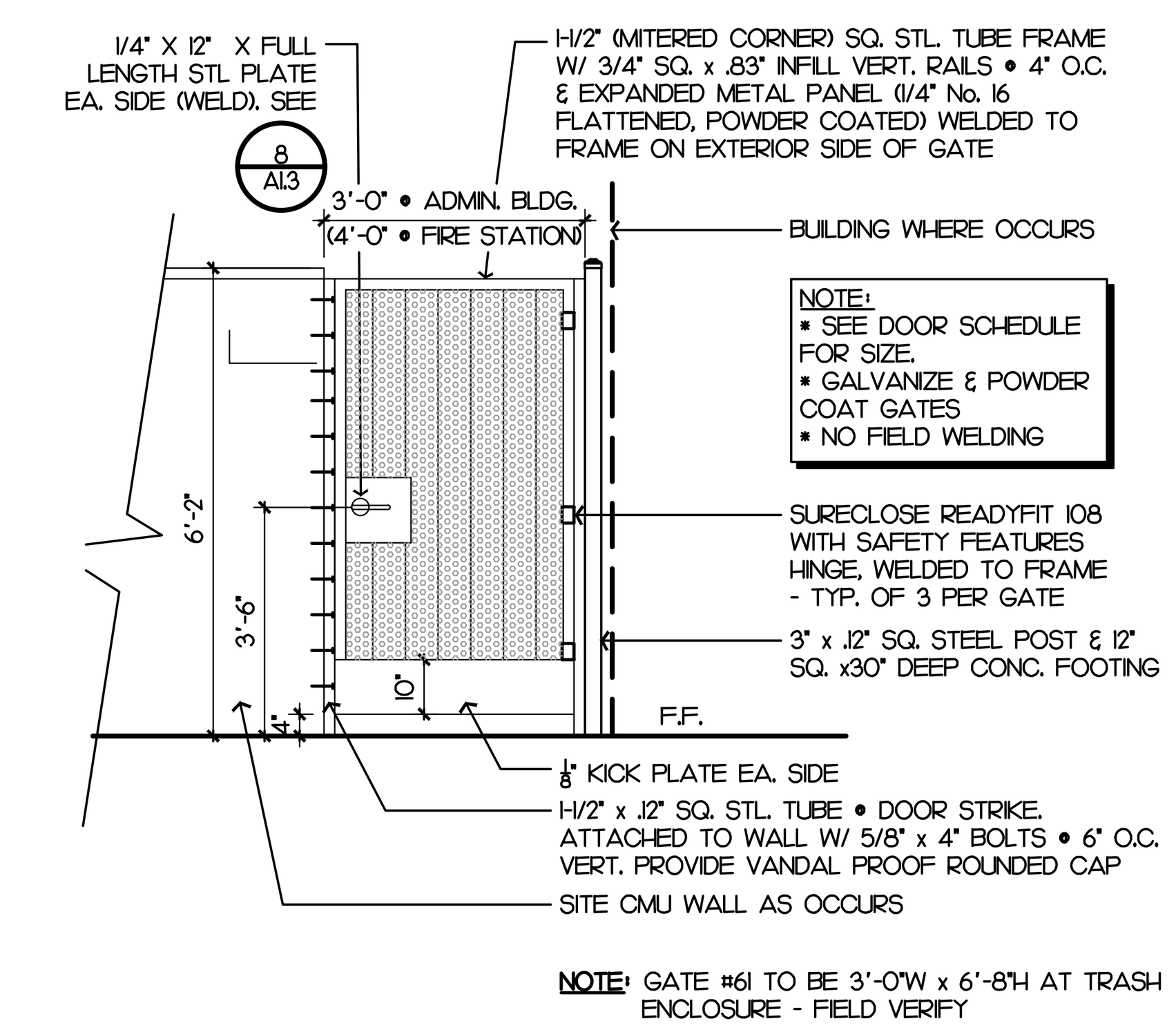

NOTE: GATE #61 TO BE 3'-0"W x 6'-8"H AT TRASH ENCLOSURE - FIELD VERIFY

PERSONNEL GATE — SCALE: 3/8"=1'-0" — 7

GENERAL H.C. PARKING NOTES:

1. PROVIDE ADEQUATE DRAINAGE.
2. SLOPE SHALL NOT EXCEED 2% IN ANY DIRECTION UNLESS THERE IS EQUIVALENT FACILITATION.
3. BLUE COLOR SHOULD MATCH COLOR # 15090 IN THE FEDERAL STANDARD 595a AS SPECIFIED IN SECTION 522(b)2.
4. EACH DISABLED PARKING STALL WILL REQUIRE A WHEEL STOP.

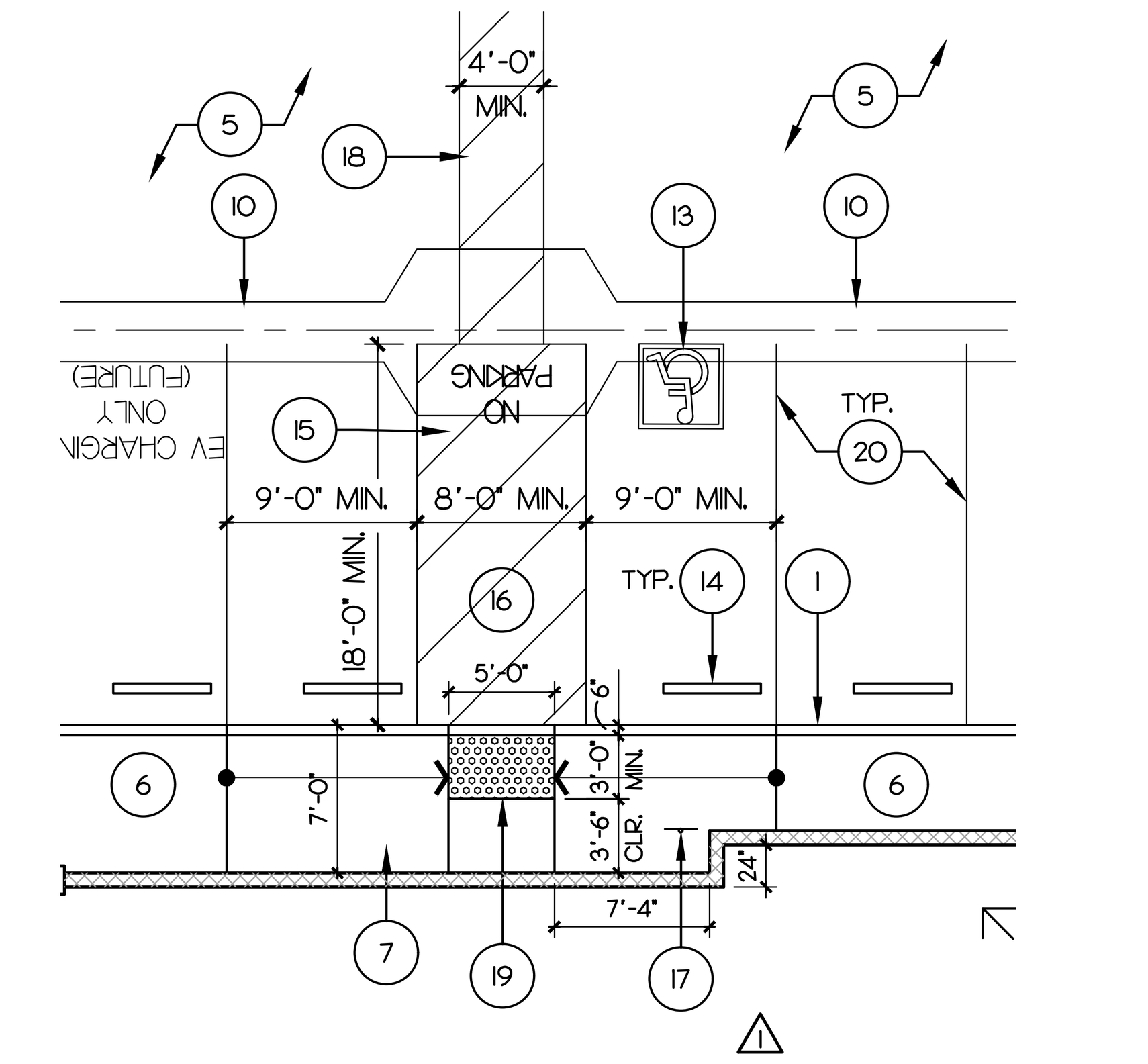

ENLARGED ADA PARKING — SCALE: 1/8"=1'-0" — 4

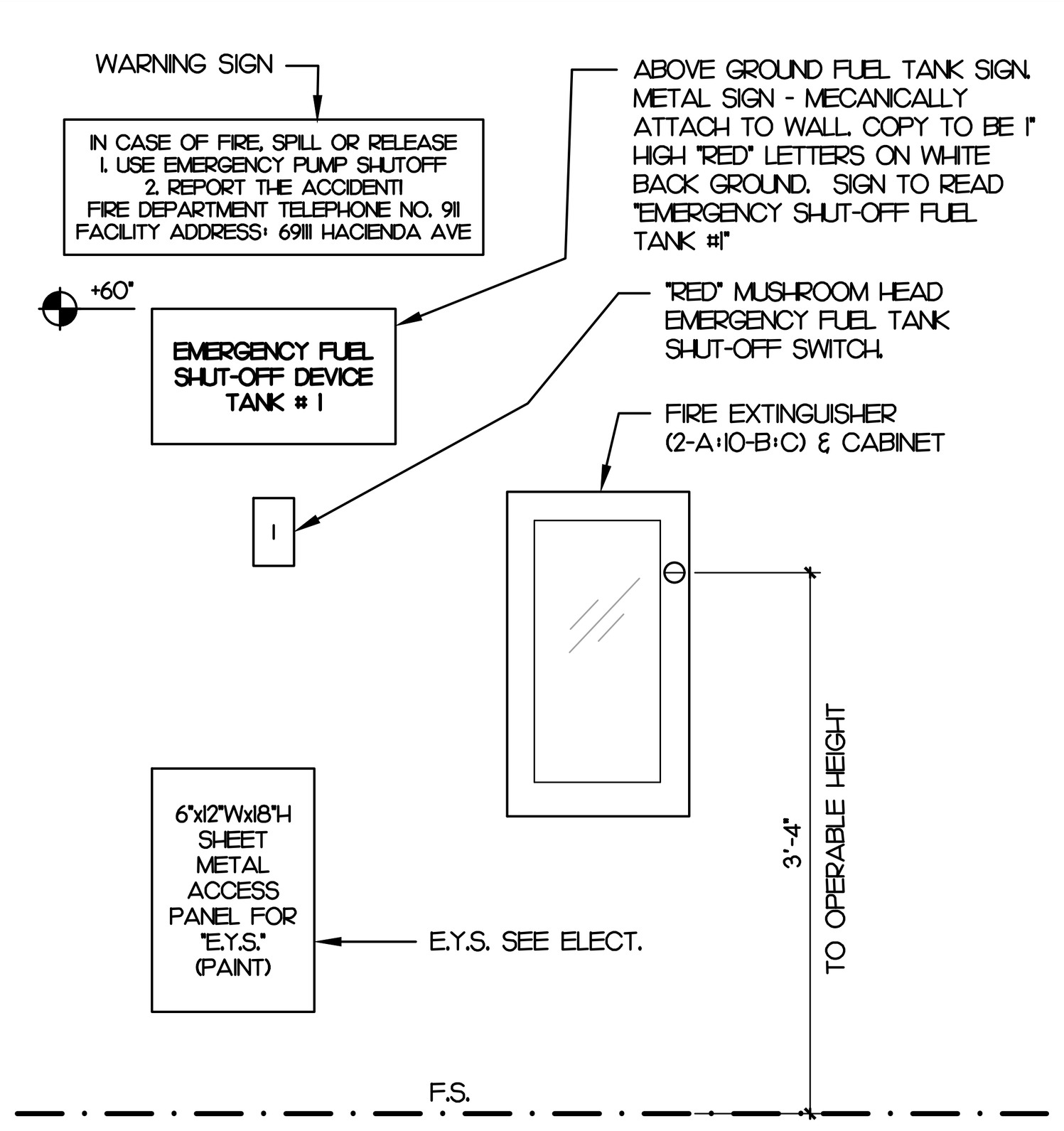

ENLARGED DETAIL — SCALE: N.T.S. — 16

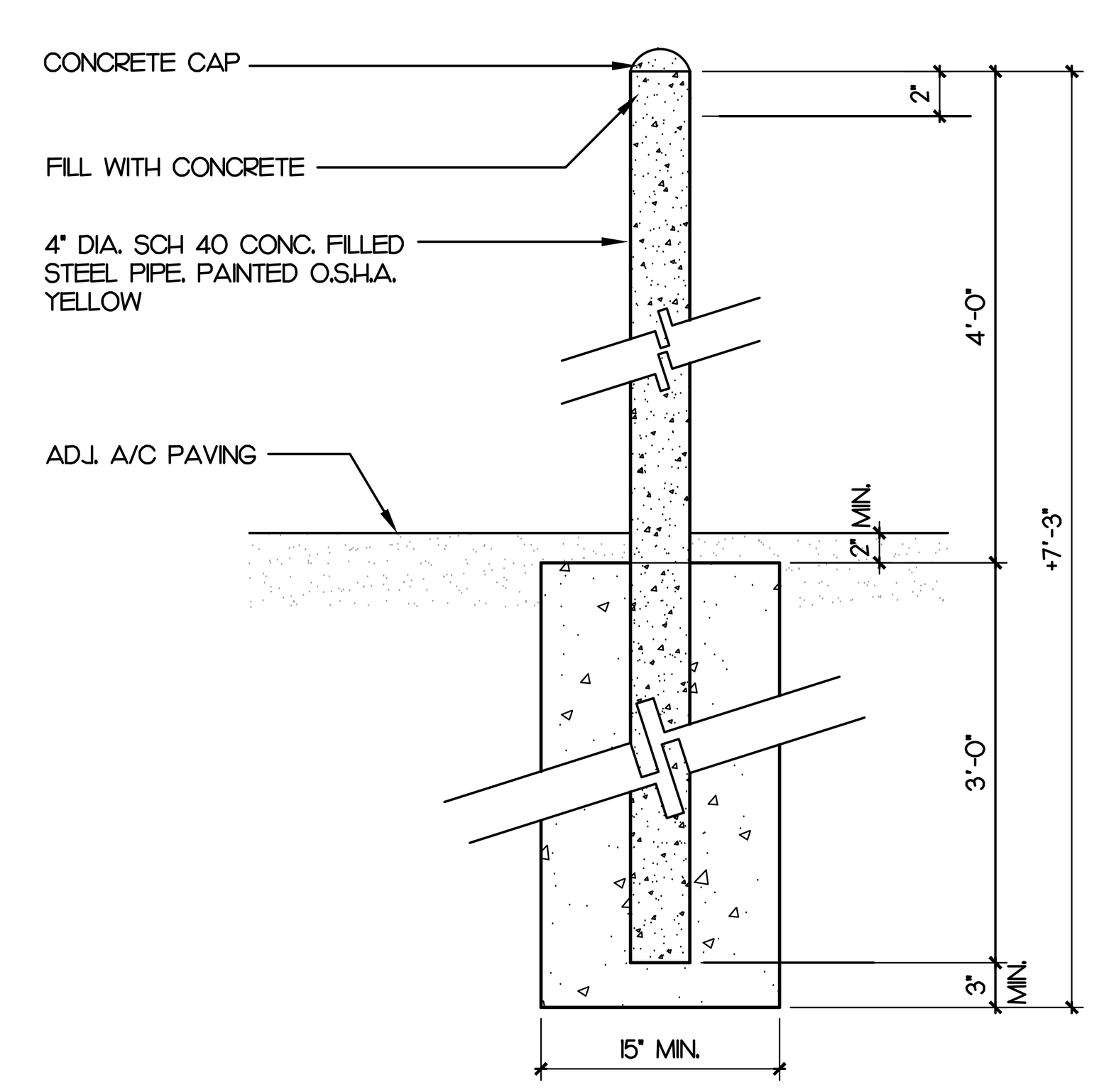

CONC. FILLED PIPE BOLLARD — SCALE: 1"=1'-0" — 12

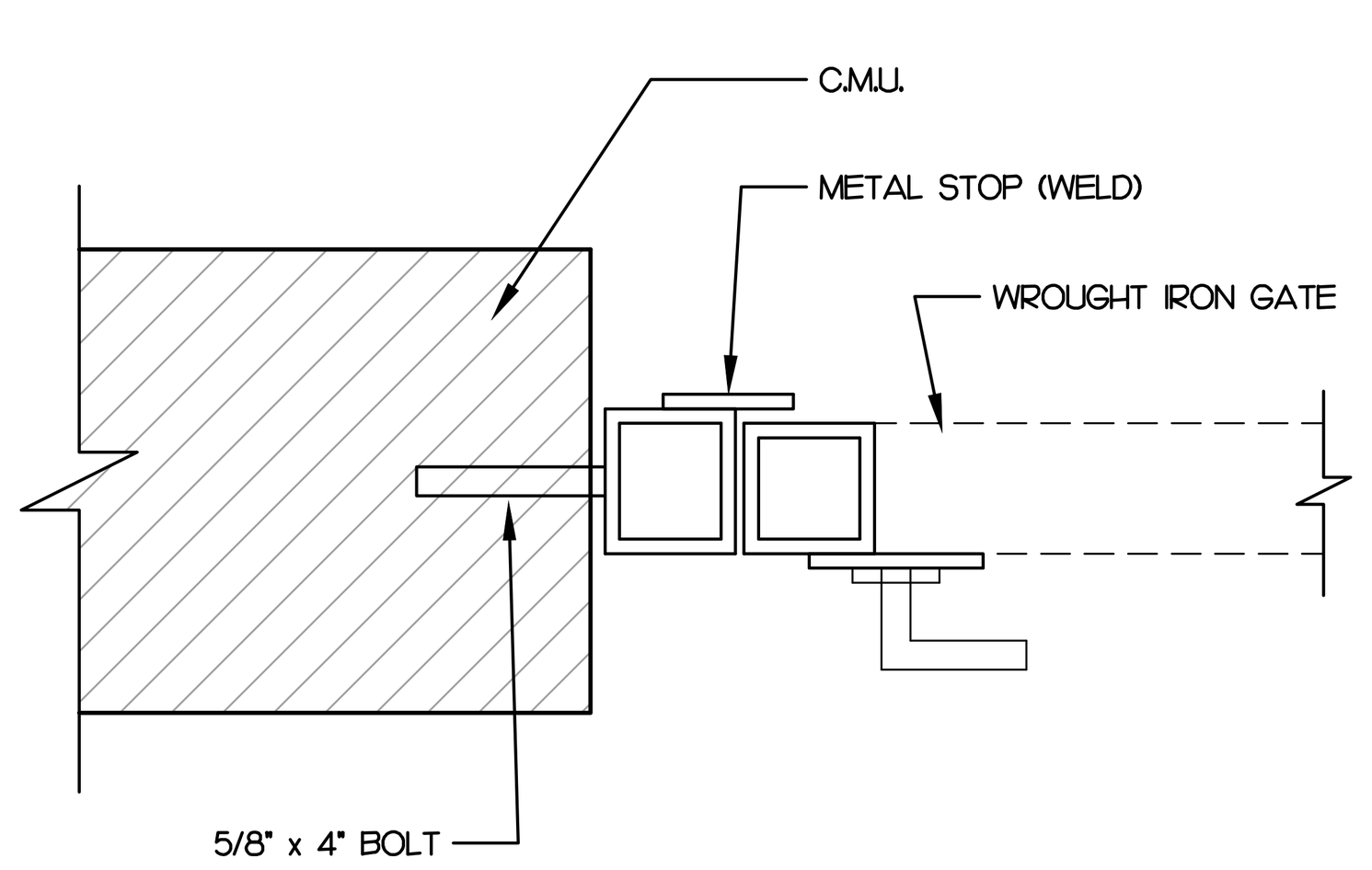

DETAIL — SCALE: 3"=1'-0" — 8

STK ARCHITECTURE, INC.
42095 ZEVO DR., TEMECULA, CALIFORNIA 92590-3780
Phone: 951.296.9110 Fax: 951.296.6079 Email: stk@stkinc.com

CONSULTANT:

REVIEWED FOR CODE COMPLIANCE
THESE PLANS AND DOCUMENTS HAVE BEEN REVIEWED AND FOUND TO BE IN COMPLIANCE WITH THE APPLICABLE CODE REQUIREMENTS OF THE JURISDICTION. ISSUANCE OF A PERMIT IS RECOMMENDED, SUBJECT TO APPROVAL BY OTHER DEPARTMENTS AND ANY NOTED CONDITIONS. THE STAMPING OF THESE PLANS SHALL NOT BE HELD TO PERMIT OR BE AN APPROVAL OF ANY VIOLATION OF APPLICABLE CODES AND STANDARDS, NOR RELIEVE THE OWNER, DESIGN PROFESSIONAL OF RECORD, OR CONTRACTOR OF COMPLIANCE WITH THE APPLICABLE CODES AND STANDARDS. PLAN REVIEW OF DOCUMENTS DOES NOT AUTHORIZE CONSTRUCTION TO PROCEED IN VIOLATION OF ANY FEDERAL, STATE, OR LOCAL REGULATION.
BUILDING BUREAU SOLUTIONS, INC.
REVIEWED BY: STEVE KIM, PE, CASp
THIS SET OF THE PLANS AND SPECIFICATIONS MUST BE KEPT ON THE JOB SITE AT ALL TIMES AND IT IS UNLAWFUL TO MAKE ANY CHANGES OR ALTERATIONS WITHOUT PERMISSION FROM THE CITY. OCCUPANCY OF STRUCTURE(S) IS NOT PERMITTED UNTIL FINAL APPROVAL IS GRANTED BY ALL APPLICABLE DEPARTMENTS.
BBS BUILDING BUREAU SOLUTIONS INC.

PROJECT ADMINISTERED BY:

CITY OF PERRIS

101 NORTH "D" STREET
PERRIS, CA 92570

PROJECT NAME:

FIRE STATION 105 AND ADMINISTRATION BUILDING

PROJECT CIP: F077

2495 MURRIETA ROAD
PERRIS, CA 92585

ISSUE INFORMATION:

DATE:	INFORMATION:
11-26-25	95% CD SUBMITTAL
02-05-26	1 1st PC RESPONSE
02-19-26	2 2nd PC RESPONSE
02-22-26	3 3rd PC RESPONSE
04-27-26	4 4th PC RESPONSE

SHEET INFORMATION:

STK PROJECT NO.: 365-03-25
SCALE: AS NOTED
DATE: NOVEMBER 2025
PLOT DATE: –
DRAWN BY: JN

SEAL:

LICENSED ARCHITECT — ANTONIO FINALDI — No. C31476 — REN. 07-31-27 — STATE OF CALIFORNIA

SHEET TITLE:

SITE DETAILS

SHEET NO.:

A1.3

GENERAL GATE NOTES

ELECTRIC OPERATED W/ @ H/4 HP AC MOTOR W/ MOUSE PROOF ENCLOSURES. SEE SPECIFICATIONS.

PROVIDE GATE MOTOR W/ ADJUSTABLE AUTOMATIC TIMED GATE CLOSING DEVICE.

ALL GATE, OPERATOR & SAFETY FUNCTIONS SHALL COMPLY WITH UL 325 (NO EXCEPTIONS).

ALL GATE STEEL SHALL BE 22' THICK MIN. (TYP.).

ALL GATE COMPONENTS SHALL BE POWDER POLYESTER COATED. USE A TWO-COAT SYSTEM, PRIMER & POWDER TOP COAT W/ BLACK MATTE FINISH.

GATE PINS SHALL BE RATED WITH SHEAR PIN FORCE NOT TO EXCEED 30 FOOT POUNDS.

PROVIDE KNOX KEY SWITCH AS REQUIRED. CONTRACTOR TO OBTAIN ORDER FORM FROM THE RIVERSIDE COUNTY FIRE DEPARTMENT.

INSTALL (2) TWO PER GATE, 3/GA ENGINEER-GRADE REFLECTIVE ALUMINUM (6.5" x 17) LL 325 (ENLISH/SPANISH) MOVING GATE WARNING SIGNS WITH 1/4" x .6" x 5/8" BRAZIER HEAD ALUMINUM DRIVE RIVETS BY HANSON RIVET & SUPPLY CO. (818.485-0500 / www.hansonrivet.com) OR APPROVED EQUAL. INSTALL 4 FASTENERS MIN. PER SIGN. FIELD VERIFY EXACT LOCATION.

THE INSTALLATION OF SECURITY GATES SHALL BE IN ACCORDANCE WITH UL-325 AND AMERICAN SOCIETY FOR TESTING AND MATERIALS (ASTM) F2200 STANDARDS.

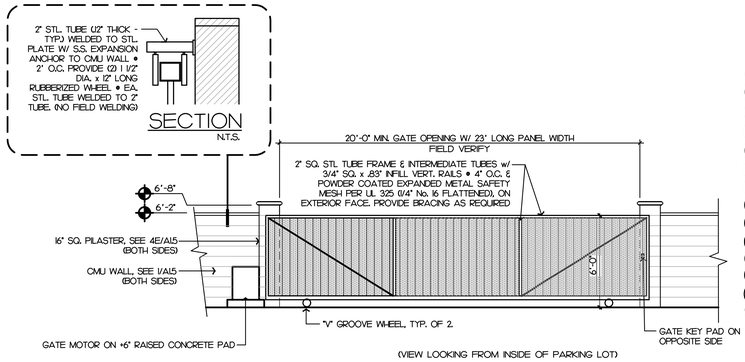

(VIEW LOOKING FROM INSIDE OF PARKING LOT)

CITY OF PERRIS FIRE DEPT. ACCESS NOTES FOR ELECTRICALLY OPERATED GATES:

1. IN THE EVENT OF LOSS OF NORMAL POWER TO THE GATE OPERATING MECHANISM, IT SHALL BE AUTOMATICALLY TRANSFERRED TO A FAIL-SAFE MODE ALLOWING THE GATE TO BE PUSHED OPEN BY A SINGLE FIREFIGHTER WITHOUT ANY OTHER ACTIONS, KNOWLEDGE, OR MANIPULATION OF THE OPERATING MECHANISM BEING NECESSARY AND WITHOUT THE USE OF BATTERY BACK-UP POWER.
2. THE GATE CONTROL FOR ELECTRONIC GATES SHALL BE OPERABLE BY A KNOX EMERGENCY OVERRIDE KEY SWITCH (WITH DUST COVER). THE KEY SWITCH SHALL BE PLACED BETWEEN 40" AND 48" ABOVE THE ROADWAY SURFACE AT THE RIGHT SIDE OF THE ACCESS GATE WITHIN TWO FEET OF THE EDGE OF THE ROADWAY. THE KEY SWITCH SHALL BE READILY VISIBLE AND UNOBSTRUCTED FROM THE FIRE LANE LEADING TO THE GATE. THE KEY SWITCH SHALL BE CLEARLY LABELED "FIRE DEPT."
3. UPON ACTIVATION OF THE KEY SWITCH, THE GATE SHALL OPEN AND REMAIN OPEN UNTIL RETURNED TO NORMAL OPERATION BY MEANS OF THE KEY SWITCH. WHERE A GATE CONSISTS OF TWO LEAVES, THE KEY SWITCH SHALL OPEN BOTH SIMULTANEOUSLY. IF OPERATION OF A SINGLE LEAF ON THE INGRESS SIDE DOES NOT PROVIDE FOR THE WIDTH, TURNING RADII, OR SETBACKS NECESSARY FOR FIRE APPARATUS TO NAVIGATE THE VEHICLE ENTRY POINT.
4. THE KEY SWITCH SHALL BE LABELED WITH A PERMANENT RED SIGN WITH NOT LESS THAN 1/2" CONTRASTING LETTERS READING "FIRE DEPT" OR WITH A "KNOX" DECAL.

MOTORIZED ROLLING GATE ELEVATION - ADMIN. BUILDING (ADDITIVE ALTERNATE #1)

SCALE: 1/4"=1'-0" 9

NOT USED

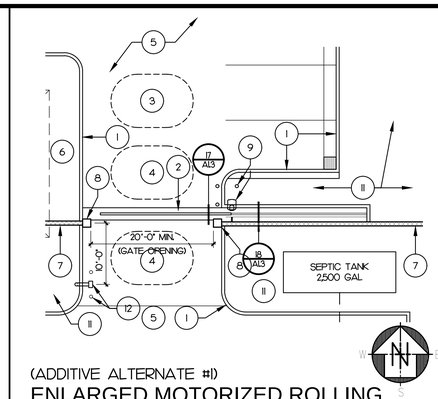

(ADDITIVE ALTERNATE #1)

ENLARGED MOTORIZED ROLLING GATE PLAN - ADMIN BUILDING

SCALE: 1"=10'-0" 5

KEY NOTE

1. CONCRETE CURB OR CURB & GUTTER - SEE CIVIL.
2. MOTORIZED ORNAMENTAL ROLLING GATE & CONCRETE TRACK - SEE 9/A14.
3. MOTORIZED GATE EXIT LOOP - FIELD VERIFY.
4. MOTORIZED GATE SAFETY LOOPS - FIELD VERIFY.
5. CONCRETE PAVING/DRIVEWAY - SEE CIVIL.
6. CONCRETE PAVING/SIDEWALK - SEE CIVIL.
7. SITE CMU WALL AS OCCURS - SEE 1/A15.
8. CMU PILASTER AS OCCURS ON BOTH SIDES - SEE 4C/A15.
9. GATE OPERATOR & PAD W/ CONCRETE PIPE BOLLARDS (TYP. OF 3) - SEE 12/A13.
10. BUILDING / STRUCTURE AS OCCURS.
11. LANDSCAPE & IRRIGATION PER LANDSCAPE DWGS.
12. MOTORIZED GATE KEYPAD ON PEDESTAL (SEE ELECT. & 11/A13) & (2) PIPE BOLLARDS (SEE 12/A13) MOUNT KEYPAD AT +40" - FIELD VERIFY.
13. INTERNATIONAL SYMBOL OF ACCESSIBILITY - SEE 15/A13.
14. WHEEL STOP - SEE SPECS & CIVIL.
15. 12" HIGH LETTERS - PAINT WHITE.
16. 4" WIDE CONTRASTING COLOR STRIPING @ 3'-0" O.C.
17. ADA SIGN & POST - SEE 14/A13.
18. ADA PATH OF TRAVEL: 4'-0" WIDE MIN & 4" STRIPING @ 3'-0" O.C. OF CONTRASTING COLOR TO BACKGROUND/PAVEMENT.
19. DETECTABLE WARNING SURFACING - SEE SPECS.
20. RIBBON GUTTER & FLOW LINE PER CIVIL.
21. ELECTRIC VEHICLE CHARGING STATION & COMPONENTS - SEE ELECT.
22. BIKE RACK & COMPONENTS ON CONC. PAVING - SEE SPECS. INSTALL PER MANUF.'S RECOMMENDATIONS.

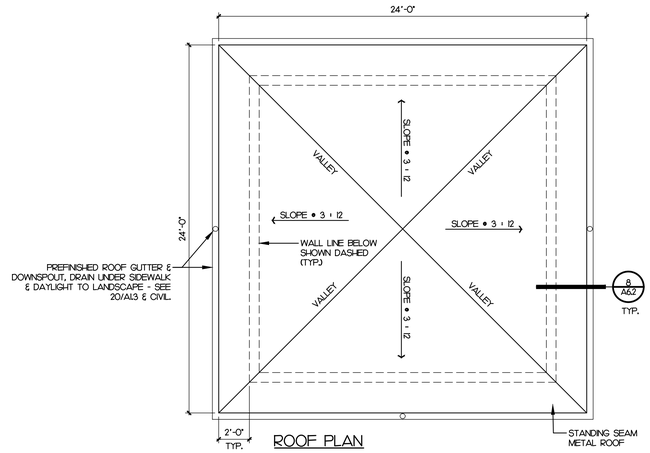

ROOF PLAN

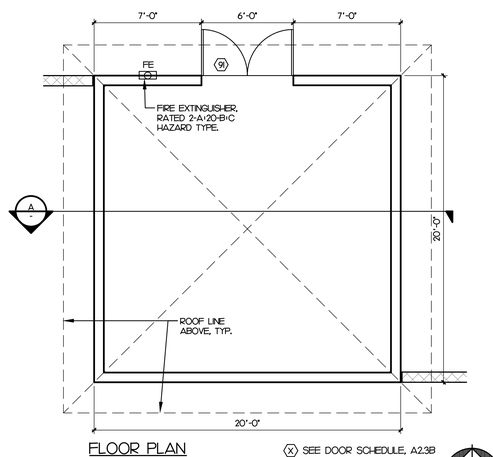

FLOOR PLAN

(X) SEE DOOR SCHEDULE, A2.3B

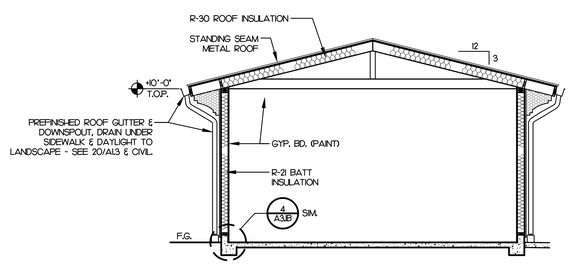

SECTION (A)

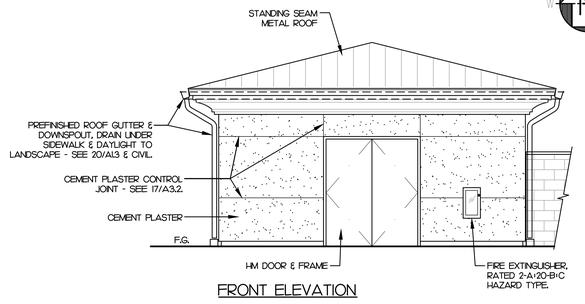

FRONT ELEVATION

STORAGE BUILDING AT ADMINISTRATION BUILDING (ADDITIVE ALTERNATE #1)

SCALE: 1/4"=1'-0" 7

GENERAL H.C. PARKING NOTES:

1. PROVIDE ADEQUATE DRAINAGE.
2. SLOPE SHALL NOT EXCEED 2% IN ANY DIRECTION UNLESS THERE IS EQUIVALENT FACILITATION.
3. BLUE COLOR SHOULD MATCH COLOR # 15090 IN THE FEDERAL STANDARD 595a AS SPECIFIED IN SECTION 522b2.
4. EACH DISABLED PARKING STALL WILL REQUIRE A WHEEL STOP.

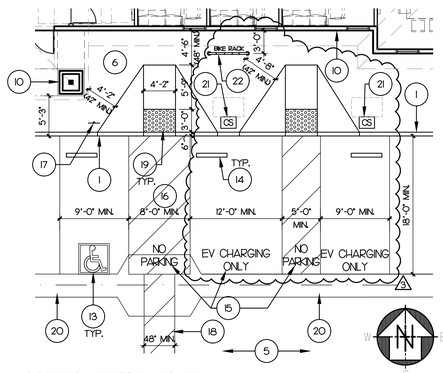

(ADDITIVE ALTERNATE #1)

ENLARGED ADA PARKING

SCALE: 1/8"=1'-0" 3

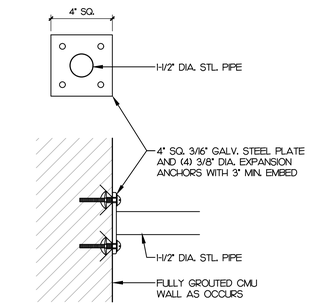

DETAIL

SCALE: 3"=1'-0" 16

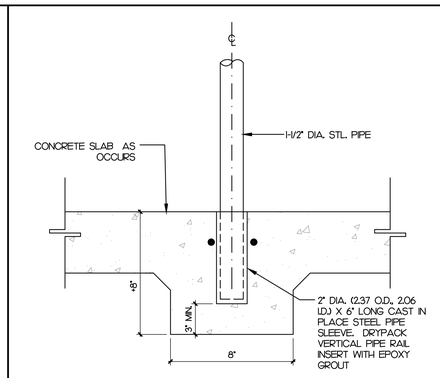

DETAIL

SCALE: 3"=1'-0" 12

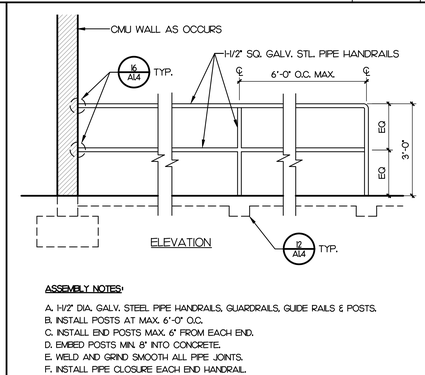

ASSEMBLY NOTES:

A. 1-1/2" DIA. GALV. STEEL PIPE HANDRAILS, GUARDRAILS, GUIDE RAILS & POSTS.
B. INSTALL POSTS AT MAX. 6'-0" O.C.
C. INSTALL END POSTS MAX. 6" FROM EACH END.
D. EMBED POSTS MIN. 8" INTO CONCRETE.
E. WELD & GRIND SMOOTH ALL PIPE JOINTS.
F. INSTALL PIPE CLOSURE EACH END HANDRAIL.

GUARDRAIL

SCALE: 1/2"=1'-0" 8

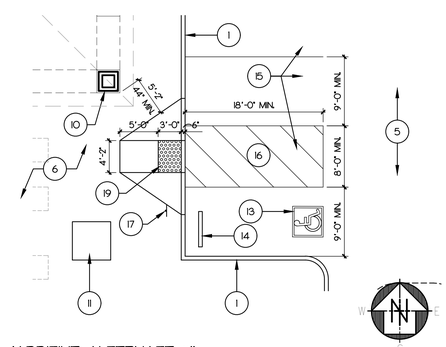

(ADDITIVE ALTERNATE #1)

ENLARGED SITE PLAN

SCALE: 1/8"=1'-0" 4

STK
42095 ZEVO DR., TEMECULA, CALIFORNIA 92590-3780
Phone: 951.296.9110 Fax: 951.296.6079 Email: stk@stkinc.com

CONSULTANT:

REVIEWED FOR CODE COMPLIANCE

THESE PLANS AND DOCUMENTS HAVE BEEN REVIEWED AND FOUND TO BE IN SUBSTANTIAL COMPLIANCE WITH THE CODES IN EFFECT AT THE TIME OF JURISDICTION. ISSUANCE OF A PERMIT IS NOT CONSIDERED AS APPROVAL BY OTHER DEPARTMENTS AND ANY NOTED CONDITIONS. THE ISSUANCE OF A PERMIT BASED ON CONSTRUCTION DOCUMENTS DOES NOT APPROVAL OF ANY VIOLATIONS OF APPLICABLE CODES AND STANDARDS, NOR RELIEVE THE OWNER, DESIGN PROFESSIONAL OF RECORD, OR CONTRACTOR OF RESPONSIBILITY FOR COMPLIANCE WITH APPLICABLE CODES AND STANDARDS. THE DOCUMENTS DOES NOT AUTHORIZE CONSTRUCTION SUSPENDED IN VIOLATION OF ANY FEDERAL, STATE OR LOCAL REGULATIONS.

BUILDING BUREAU / ELECTRICAL INC.
REVIEWED BY: STEVEN M. PEREZ

THIS SET OF THE PLANS AND SPECIFICATIONS MUST BE KEPT ON THE JOB SITE AT ALL TIMES IT IS UNLAWFUL TO MAKE ANY CHANGES OR ALTERATIONS ON THE SAME, WITHOUT AUTHORIZATION FROM THE CITY DEPARTMENT. FOR BIDDING PURPOSES ONLY. THIS SET OF PLANS IS NOT APPROVED BY ALL CITY DEPARTMENTS.

STRUCTURAL TECHNICAL SOLUTIONS INC.

PROJECT ADMINISTERED BY:

CITY OF PERRIS

101 NORTH "D" STREET
PERRIS, CA 92570

PROJECT NAME:

FIRE STATION 105 AND ADMINISTRATION BUILDING

PROJECT CIP: F077

2495 MURRIETA ROAD
PERRIS, CA 92585

ISSUE INFORMATION:

DATE:	INFORMATION:
11-26-25	95% CD SUBMITTAL
02-05-26	1 1st PC RESPONSE
02-19-26	2 2nd PC RESPONSE
02-22-26	3 3rd PC RESPONSE
04-27-26	4 4th PC RESPONSE

SHEET INFORMATION:

STK PROJECT NO.: 365-03-25
SCALE: AS NOTED
DATE: NOVEMBER 2025
PLOT DATE: –
DRAWN BY: JN

SEAL:

LICENSED ARCHITECT ANTONIO FINALDI No. C31476 REN. 07-31-27 STATE OF CALIFORNIA

SHEET TITLE:

SITE DETAILS

SHEET NO:

A1.4

J:\365-City of Perris\365-03-25 South Perris Fire Station\Architects\sub\A1.4 - SITE DETAILS.dwg
05/05/2026 2:47PM

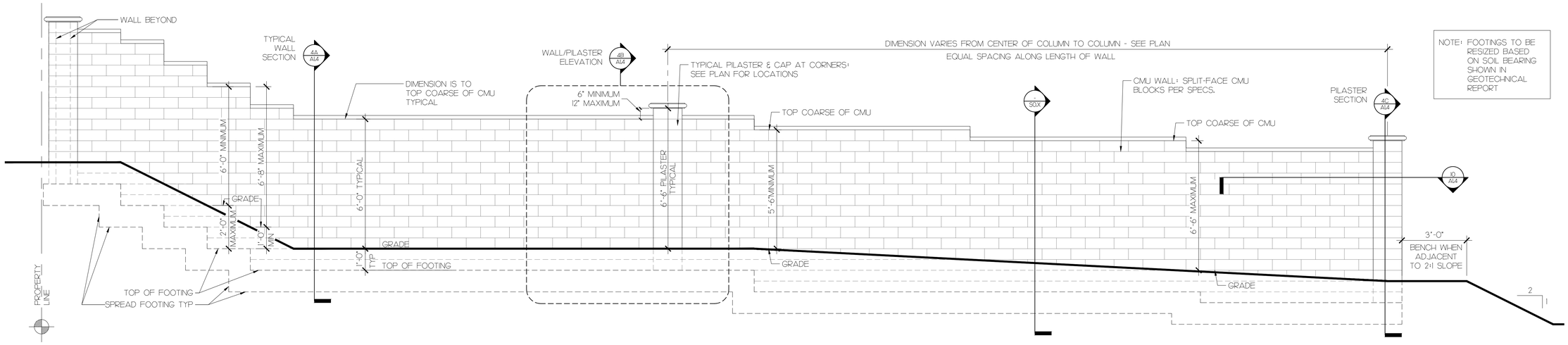

TYPICAL SITE WALL CONSTUCTION GUIDE LINES (SHOWING THE CRITERIA FOR A WALL CONFIGURATION - NOT AN ACTUAL CONFIGURATION FOR THE WALL ON THE PROPERTY LINE)

SCALE: 1/2"=1'-0" — 1

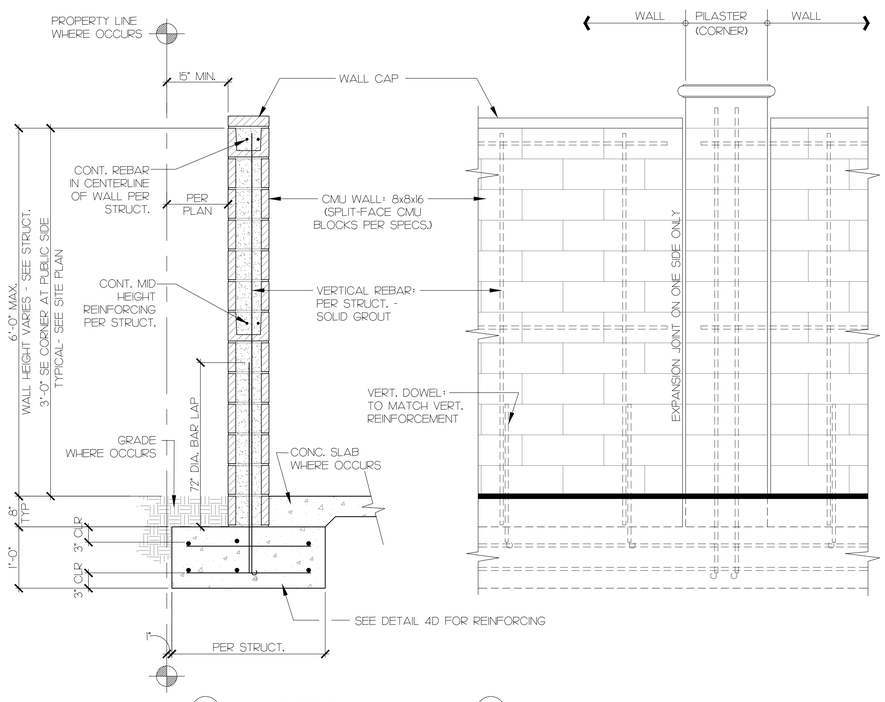

4A WALL SECTION

4B WALL/PILASTER ELEVATION

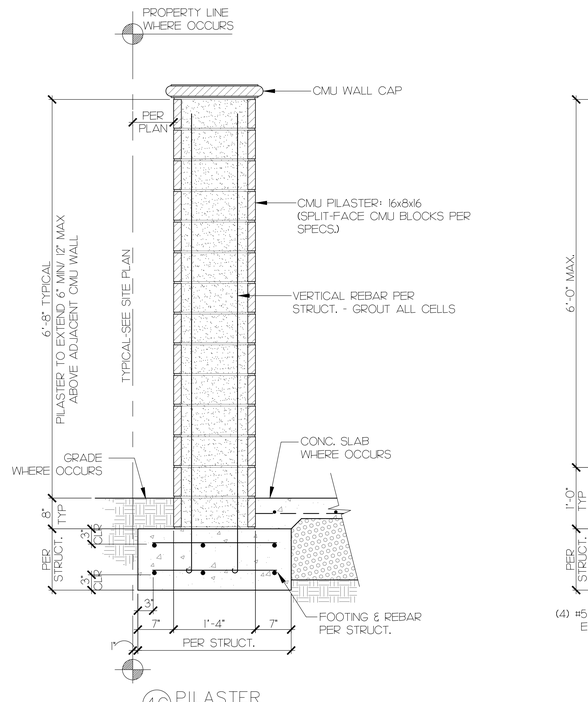

4C PILASTER SECTION

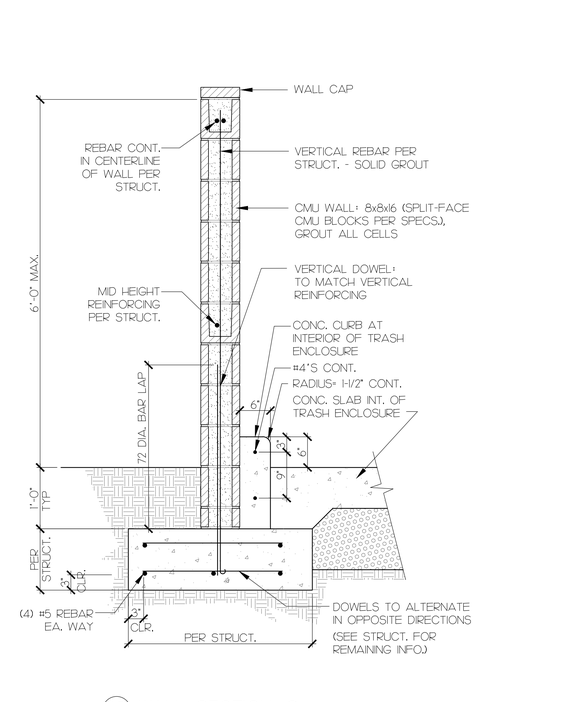

4D WALL SECTION @ TRASH ENCLOSURE

CMU WALL DETAILS AND SPECIFICATIONS

SCALE: 1"=1'-0" — 4



A RIGHT B LEFT C LEFT

12"x18" HIGH INTENSITY REFLECTIVE ALUMINUM SIGNS MODEL #'S 6242 & 6226 BY myparkingsign.com OR APPROVED EQUAL.

PROVIDE POSTS & FOOTINGS SIMILAR TO 14/AL3 - TYP.

ACCESSIBLE DIRECTIONAL SIGNS

SCALE: N.T.S. — 16

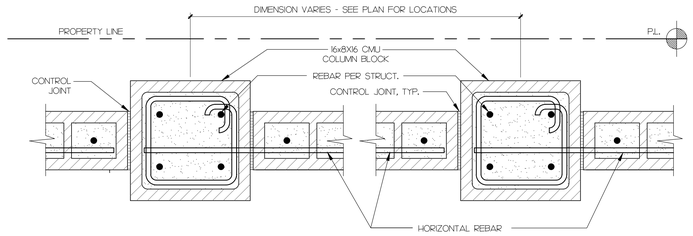

PILASTER SECTION/PLAN

SCALE: 1-1/2"=1'-0" — 10

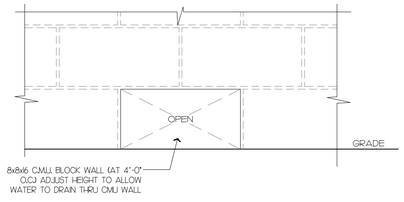

DRAINAGE THRU CMU

SCALE: 1-1/2"=1'-0" — 5

STK
42095 ZEVO DR., TEMECULA, CALIFORNIA 92590-3780
Phone: 951.296.9110 Fax: 951.296.6079 Email: stk@stkinc.com

CONSULTANT:

REVIEWED FOR CODE COMPLIANCE

THESE PLANS AND DOCUMENTS HAVE BEEN REVIEWED AND FOUND TO BE IN COMPLIANCE WITH THE CODES AND ORDINANCES OF THE JURISDICTION. ISSUANCE OF A PERMIT IS RECOMMENDED, SUBJECT TO APPROVAL BY OTHER DEPARTMENTS AND ANY NOTED CONDITIONS. THE ISSUANCE OF A PERMIT BASED ON THESE PLANS AND DOCUMENTS, OR APPROVAL OF ANY VIOLATIONS OF APPLICABLE CODES AND STANDARDS, NOR RELIEVE THE OWNER, DESIGN PROFESSIONAL OF RECORD, OR CONTRACTOR OF RESPONSIBILITY FOR COMPLYING WITH APPLICABLE REQUIREMENTS. THESE DOCUMENTS DOES NOT AUTHORIZE CONSTRUCTION SUSPENDED IN VIOLATION OF ANY FEDERAL, STATE OR LOCAL REGULATIONS.

BUILDING BUREAU ADDITIONAL INC.
REVIEWED BY: STEVEN M. PS, CASp

THIS SET OF THE PLANS AND SPECIFICATIONS MUST BE KEPT ON THE JOB SITE AT ALL TIMES DURING CONSTRUCTION. IT IS UNLAWFUL TO MAKE ANY CHANGES WITHOUT AUTHORIZATION FROM THE CITY OFFICIAL. PERMISSION TO CONSTRUCT IS NOT TO BE CONSTRUED AS APPROVAL OF VIOLATIONS OF THE BUILDING CODES OR OTHER ORDINANCES OF THE CITY. ISSUANCE OF A PERMIT BASED ON CONSTRUCTION DOCUMENTS AND OTHER DATA SHALL NOT PREVENT THE CODE OFFICIAL FROM REQUIRING THE CORRECTION OF ERRORS IN THE CONSTRUCTION DOCUMENTS AND OTHER DATA. THE ADOPTION OF THIS CODE SHALL NOT BE INTERPRETED TO BE A PERMIT OR APPROVAL OF ANY VIOLATION OF THE BUILDING CODES OR OTHER ORDINANCES OF THE CITY. ISSUANCE OF A PERMIT BASED ON CONSTRUCTION DOCUMENTS AND OTHER DATA SHALL NOT PREVENT THE CODE OFFICIAL FROM REQUIRING THE CORRECTION OF ERRORS IN THE CONSTRUCTION DOCUMENTS AND OTHER DATA. THE ADOPTION OF THIS CODE SHALL NOT BE INTERPRETED TO BE A PERMIT OR APPROVAL OF ANY VIOLATION OF THE BUILDING CODES OR OTHER ORDINANCES OF THE CITY. PERMISSION TO CONSTRUCT IS NOT TO BE CONSTRUED AS APPROVAL OF VIOLATIONS OF THE BUILDING CODES OR OTHER ORDINANCES OF THE CITY. ISSUANCE OF A PERMIT BASED ON CONSTRUCTION DOCUMENTS AND OTHER DATA SHALL NOT PREVENT THE CODE OFFICIAL FROM REQUIRING THE CORRECTION OF ERRORS IN THE CONSTRUCTION DOCUMENTS AND OTHER DATA. THE ADOPTION OF THIS CODE SHALL NOT BE INTERPRETED TO BE A PERMIT OR APPROVAL OF ANY VIOLATION OF THE BUILDING CODES OR OTHER ORDINANCES OF THE CITY. PERMISSION TO CONSTRUCT IS NOT TO BE CONSTRUED AS APPROVAL OF VIOLATIONS OF THE BUILDING CODES OR OTHER ORDINANCES OF THE CITY. ISSUANCE OF A PERMIT BASED ON CONSTRUCTION DOCUMENTS AND OTHER DATA SHALL NOT PREVENT THE CODE OFFICIAL FROM REQUIRING THE CORRECTION OF ERRORS IN THE CONSTRUCTION DOCUMENTS AND OTHER DATA. THE ADOPTION OF THIS CODE SHALL NOT BE INTERPRETED TO BE A PERMIT OR APPROVAL OF ANY VIOLATION OF THE BUILDING CODES OR OTHER ORDINANCES OF THE CITY.
BUILDING BUREAU SOLUTIONS INC.

PROJECT ADMINISTERED BY:
CITY OF PERRIS

101 NORTH "D" STREET
PERRIS, CA 92570

PROJECT NAME:
FIRE STATION 105 AND ADMINISTRATION BUILDING

PROJECT CIP: F077

2495 MURRIETA ROAD
PERRIS, CA 92585

ISSUE INFORMATION:

DATE:	INFORMATION:
11-26-25	95% CD SUBMITTAL
02-05-26	1 1st PC RESPONSE
02-19-26	2 2nd PC RESPONSE

SHEET INFORMATION:

STK PROJECT NO.:	365-03-25
SCALE:	AS NOTED
DATE:	NOVEMBER 2025
PLOT DATE:	–
DRAWN BY:	JN

SEAL:

LICENSED ARCHITECT ANTONIO FINKLEA No. C31476 REN. 07-31-27 STATE OF CALIFORNIA

SHEET TITLE:
SITE CMU WALLS & DETAILS

SHEET NO.:
A1.5

J:\365-City of Perris\365-03-25 South Perris Fire Station\Architectural\A1.5 - SITE CMU WALL & DETAILS.dwg
04/14/2026 1:54PM

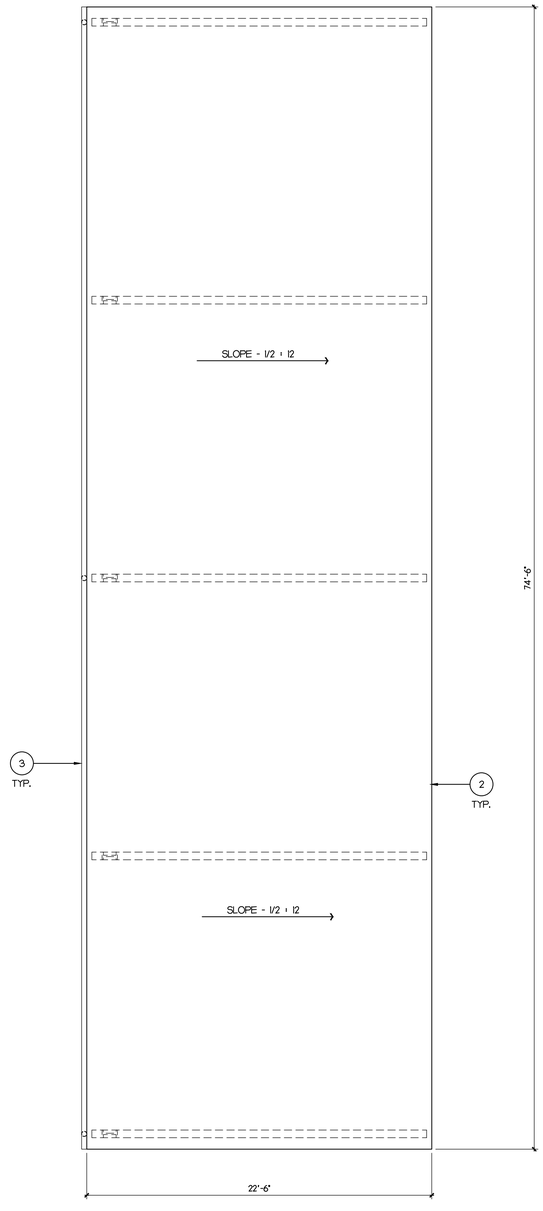

NOTES:
THE DRAWING & NOTES SHOWN ON THIS SHEET IS FOR INFORMATION & BIDDING PURPOSE ONLY. FINAL DESIGN & ENGINEERING/SHOP DRAWING SHALL BE PROVIDED BY THE GENERAL CONTRACTOR, WET STAMPED BY A REGISTERED CALIFORNIA ENGINEER. SEE SECTION 13 3420 OF SPECIFICATIONS.

ROOF PLAN — SCALE: 1/4"=1'-0" — 16

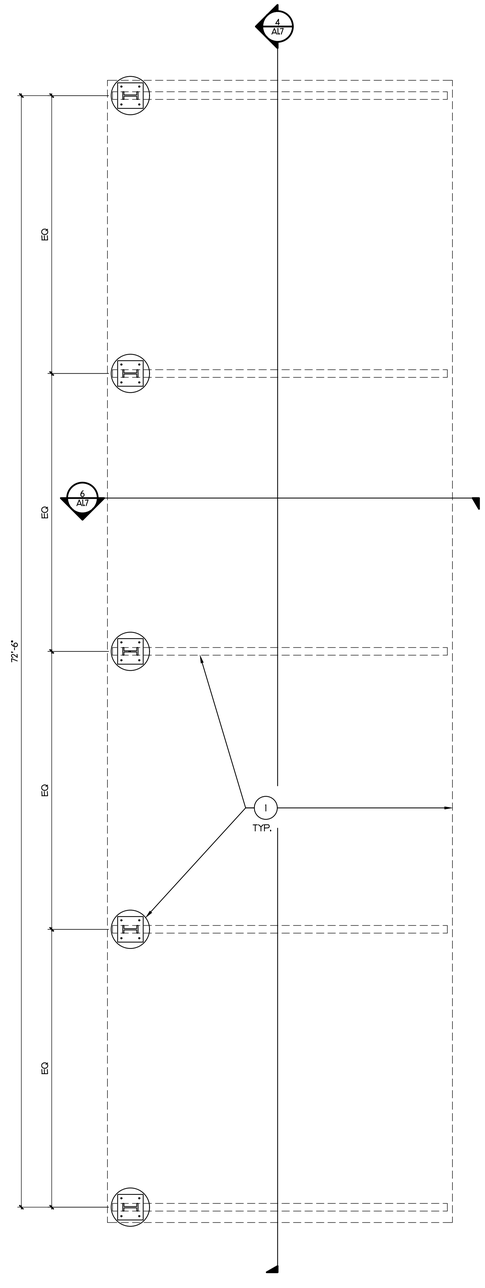

NOTES:
THE DRAWING & NOTES SHOWN ON THIS SHEET IS FOR INFORMATION & BIDDING PURPOSE ONLY. FINAL DESIGN & ENGINEERING/SHOP DRAWING SHALL BE PROVIDED BY THE GENERAL CONTRACTOR, WET STAMPED BY A REGISTERED CALIFORNIA ENGINEER. SEE SECTION 13 3420 OF SPECIFICATIONS.

FLOOR PLAN — SCALE: 1/4"=1'-0" — 8

KEY NOTE

1. PRE-FABRICATED METAL SHADE CANOPY & FOOTING/FOUNDATION WITH PRE-FINISHED METAL ROOF PANELS, SEE SPECIFICATIONS.
2. STANDING SEAM METAL ROOFING (TO MATCH FIRE STATION) & SECONDARY FRAMING BY PRE-FAB BUILDING MANUFACTURER, PER SPECIFICATIONS. SEE ELECT. FOR ROOF MOUNTED P.V. SYSTEM & COMPONENTS - FIELD VERIFY.
3. GALVANIZED SHEET METAL GUTTER AND DOWNSPOUT (AT 3 LOCATIONS) BY PRE-FAB METAL BUILDING MANUFACTURER - PAINT. SURFACE DRAIN AWAY FROM STRUCTURE.

A. THE DRAWING & NOTES SHOWN ON THIS SHEET IS FOR INFORMATION & BIDDING PURPOSE ONLY. FINAL DESIGN & ENGINEERING/SHOP DRAWING SHALL BE PROVIDED BY THE GENERAL CONTRACTOR FOR BOTH THE BUILDING STRUCTURE & THE FOUNDATION SYSTEM, WET STAMPED BY A REGISTERED CALIFORNIA ENGINEER. GENERAL CONTRACTOR TO SUBMIT ENGINEERING/SHOP DRAWINGS AS A DEFERRED SUBMITTAL AT NO ADDED COST TO THE OWNER.

THE DRAWING CONTAINED HERE IN DEPICTING THE BUILDING STRUCTURE & THE FOUNDATION SYSTEM ARE INCOMPLETE. THE GENERAL CONTRACTOR SHALL COMPLETE THE STRUCTURAL ENGINEERING FOR THE BUILDING STRUCTURE AND FOUNDATION. ONCE THE GENERAL CONTRACTOR HAS COMPLETED STRUCTURAL ENGINEERING, ADDITIONAL STRUCTURAL COMPONENTS AND/OR FOUNDATION SIZE, REBAR, ETC. MAYBE REQUESTED/REQUIRED BY THE GENERAL CONTRACTOR'S ENGINEER. THE GENERAL CONTRACTOR SHALL INCORPORATE THESE ADDITIONAL STRUCTURAL AND/OR FOUNDATION REQUIREMENTS AT NO ADDED COST TO THE OWNER.

- PAINT ALL EXPOSED STRUCTURE THAT IS PRIME PAINTED BY THE MANUFACTURER.

B. ALL BAYS TO REMAIN CLEAR - TYP.

C. NO "X" BRACING IS ALLOWED BETWEEN COLUMNS - TYP.

D. DESIGN: PORTAL / MOMENT FRAMES ONLY - TYP.

E. SPECIFICATIONS ARE UNDER SEPARATE COVER AND ARE PART OF THE BID DOCUMENTS.

F. STRUCTURE MUST BE DESIGNED TO ACCOMMODATE FULL 'PHOTOVOLTAIC SYSTEM' ACROSS ENTIRE ROOF SURFACE - SEE ELECT. PLANS.

G. GENERAL CONTRACTOR TO PROVIDE STAMPED, SIGNED, ENGINEERED SHOP DRAWINGS AS PART OF THE CONTRACT.

H. GENERAL CONTRACTOR TO SUBMIT ALL REQUIRED PLANS & DOCUMENTS THROUGH THE CITY OF PERRIS AND IS A "DEFERRED APPROVAL" WITH APPROXIMATE FOUR (4) WEEK LEAD TIME.

I. SEE ELECT. PLANS FOR THE 'PHOTOVOLTAIC SYSTEM' WITHIN THE CANOPY'S METAL ROOF.

GENERAL NOTES

STK
ARCHITECTURE INC
42095 ZEVO DR., TEMECULA, CALIFORNIA 92590-3780
Phone: 951.296.9110 Fax: 951.296.6079 Email: stk@stkinc.com

CONSULTANT:

REVIEWED FOR CODE COMPLIANCE

THESE PLANS AND DOCUMENTS HAVE BEEN REVIEWED AND FOUND TO BE IN COMPLIANCE WITH THE CODES AND ORDINANCES OF THE CITY OF PERRIS JURISDICTION. ISSUANCE OF A PERMIT IS RECOMMENDED, SUBJECT TO APPROVAL BY OTHER DEPARTMENTS AND ANY NOTED CONDITIONS. THE ISSUANCE OF A PERMIT BASED ON THESE PLANS AND DOCUMENTS DOES NOT PREVENT THE APPLICATION OF ANY VIOLATIONS OF APPLICABLE CODES AND STANDARDS, NOR RELIEVE THE OWNER, DESIGN PROFESSIONAL OF RECORD, OR CONTRACTOR OF RESPONSIBILITY FOR COMPLIANCE WITH APPLICABLE CODES AND STANDARDS. THE DOCUMENTS DOES NOT AUTHORIZE CONSTRUCTION THAT IS REJECTED IN VIOLATION OF ANY FEDERAL, STATE OR LOCAL REGULATIONS.

BUILDING BUREAU ACCEPTANCE
REVIEWED BY: STEVEN MA, PE, CASp

THIS SET OF THE PLANS AND SPECIFICATIONS MUST BE KEPT ON THE JOB SITE AT ALL TIMES IT IS UNLAWFUL TO MAKE ANY CHANGES OR ALTERATIONS ON THE PLANS WITHOUT AUTHORIZATION FROM THE CITY DEPARTMENT. PERMITTEE HOLDING A PERMIT ISSUED ON THE BASIS OF THESE APPROVED PLANS SHALL NOTIFY ALL APPLICABLE DEPARTMENTS. ENTERPRISE PLAN SOLUTIONS INC.

PROJECT ADMINISTERED BY:
CITY OF PERRIS

101 NORTH "D" STREET
PERRIS, CA 92570

PROJECT NAME:
FIRE STATION 105
AND ADMINISTRATION
BUILDING

PROJECT CIP: F077

2495 MURRIETA ROAD
PERRIS, CA 92585

ISSUE INFORMATION:

DATE:	INFORMATION:
11-26-25	95% CD SUBMITTAL
02-05-26	1 1st PC RESPONSE
02-19-26	2 2nd PC RESPONSE

SHEET INFORMATION:

STK PROJECT NO.: 365-03-25
SCALE: AS NOTED
DATE: NOVEMBER 2025
PLOT DATE: –
DRAWN BY: JN

SEAL:

LICENSED ARCHITECT
ANTONIO FINALE
No. C31476
REN. 07-31-27
STATE OF CALIFORNIA

SHEET TITLE:

CANOPY
PLANS

SHEET NO.:

A1.6

J:\365-City of Perris\365-03-25 South Perris Fire Station\Architect\sa\A1.6 - CANOPY PLANS.dwg
04/14/2026 1:59PM

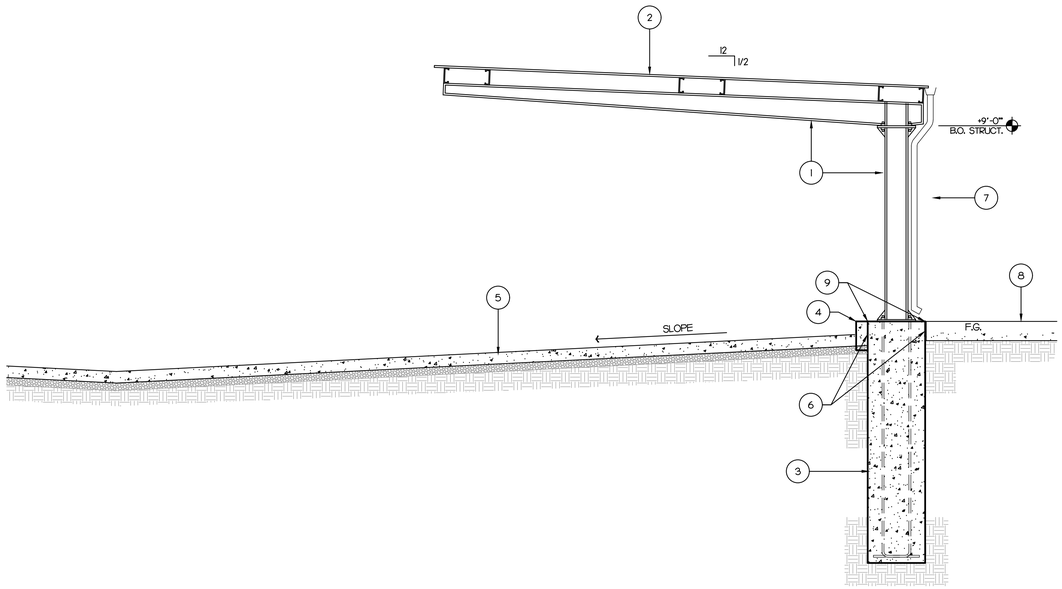

CANOPY ELEVATION / SECTION - SIM.

SCALE: 3/8"=1'-0" 6

KEY NOTE

1. PRE-FABRICATED METAL SHADE CANOPY. STRUCTURAL MEMBER SIZING PER MANUF.'S RECOMMENDATIONS. SEE SPECIFICATIONS. PAINT ALL EXPOSED STRUCT. SURFACES AS REQUIRED. COLOR TO BE DETERMINED AND FIELD VERIFY BY OWNER.
2. STANDING SEAM METAL ROOFING (TO MATCH FIRE STATION) & SECONDARY FRAMING BY PRE-FAB BUILDING MANUFACTURER, PER SPECIFICATIONS. SEE ELECT. FOR ROOF MOUNTED PV SYSTEM & COMPONENTS - FIELD VERIFY.
3. CONCRETE FOOTING, STEEL ANCHOR PLATE, REINFORCING, ETC. PER PRE-FAB METAL BUILDING MANUF.'S & SOILS REPORT RECOMMENDATIONS.
4. CONCRETE CURB WHERE OCCURS PER CIVIL.
5. CONCRETE PAVING AS OCCURS OVER CLASS II BASE PER CIVIL.
6. SEAL AT COLUMN - TYP.
7. GALVANIZED SHEET METAL GUTTER AND DOWNSPOUT (AT 3 LOCATIONS) BY PRE-FAB METAL BUILDING MANUFACTURER - PAINT. SURFACE DRAIN AWAY FROM STRUCTURE.
8. CONCRETE SIDEWALK AS OCCURS OVER COMPACTED BASE PER CIVIL.
9. FLUSH TOP OF CONCRETE FOOTING/FOUNDATION WITH ADJACENT CONCRETE SLAB & TOP OF CONCRETE CURB AS REQUIRED - FIELD VERIFY.

THE DRAWING & NOTES SHOWN ON THIS SHEET IS FOR INFORMATION & BIDDING PURPOSE ONLY. FINAL DESIGN & ENGINEERING/SHOP DRAWING SHALL BE PROVIDED BY THE GENERAL CONTRACTOR FOR BOTH THE BUILDING STRUCTURE & THE FOUNDATION SYSTEM, WET STAMPED BY A REGISTERED CALIFORNIA ENGINEER. GENERAL CONTRACTOR TO SUBMIT ENGINEERING/SHOP DRAWINGS AS A DEFERRED SUBMITTAL AT NO ADDED COST TO THE OWNER.

THE DRAWING CONTAINED HERE IN DEPICTING THE BUILDING STRUCTURE & THE FOUNDATION SYSTEM ARE INCOMPLETE. THE GENERAL CONTRACTOR SHALL COMPLETE THE STRUCTURAL ENGINEERING FOR THE BUILDING STRUCTURE AND FOUNDATION. ONCE THE GENERAL CONTRACTOR HAS COMPLETED STRUCTURAL ENGINEERING, ADDITIONAL STRUCTURAL COMPONENTS AND/OR FOUNDATION SIZE, REBAR, ETC. MAYBE REQUESTED/REQUIRED BY THE GENERAL CONTRACTOR'S ENGINEER. THE GENERAL CONTRACTOR SHALL INCORPORATE THESE ADDITIONAL STRUCTURAL AND/OR FOUNDATION REQUIREMENTS AT NO ADDED COST TO THE OWNER.

- PAINT ALL EXPOSED STRUCTURE THAT IS PRIME PAINTED BY THE MANUFACTURER.

GENERAL NOTES

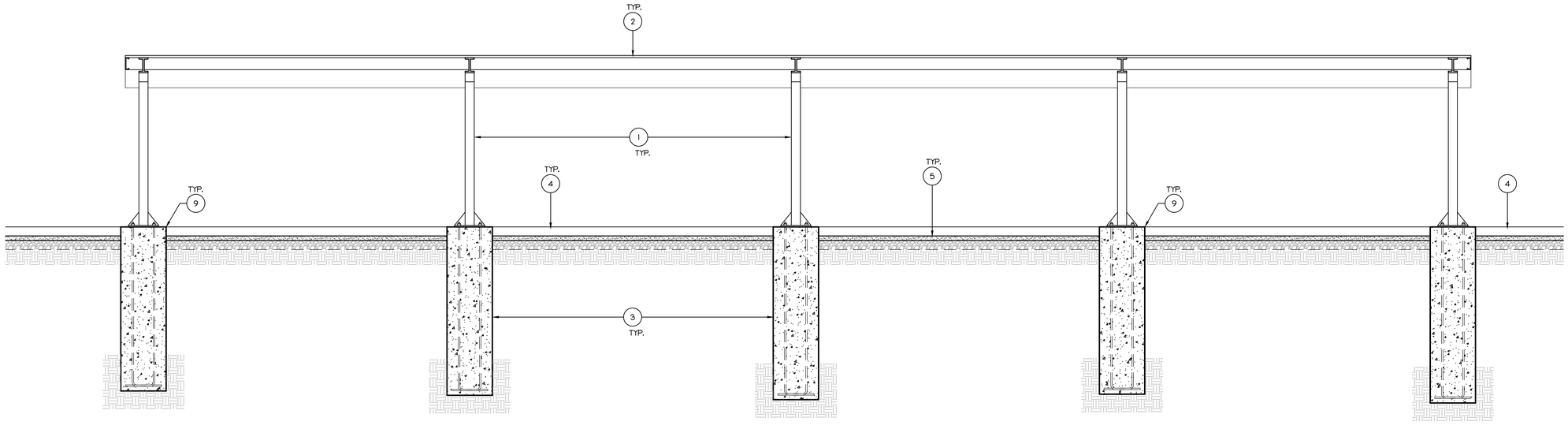

CANOPY ELEVATION / SECTION - SIM.

SCALE: 3/8"=1'-0" 4

STK
42095 ZEVO DR., TEMECULA, CALIFORNIA 92590-3780
Phone: 951.296.9110 Fax: 951.296.6079 Email: stk@stkinc.com

CONSULTANT:

REVIEWED FOR CODE COMPLIANCE

THESE PLANS AND DOCUMENTS HAVE BEEN REVIEWED AND FOUND TO BE IN COMPLIANCE WITH THE CODES ADOPTED BY THE AUTHORITY HAVING JURISDICTION. ISSUANCE OF A PERMIT IS RECOMMENDED, SUBJECT TO APPROVAL BY OTHER DEPARTMENTS AND ANY NOTED CONDITIONS. THE ISSUANCE OF A PERMIT BASED ON THESE PLANS AND DOCUMENTS DOES NOT PREVENT THE BUILDING OFFICIAL FROM REQUIRING THE CORRECTION OF ERRORS IN THE PLANS AND DOCUMENTS OR FROM PREVENTING BUILDING OPERATIONS BEING CARRIED ON THEREON WHEN IN VIOLATION OF THE CODES ADOPTED BY THE AUTHORITY HAVING JURISDICTION OR ANY OTHER ORDINANCE, REGULATION OR REQUIREMENT OF THE JURISDICTION. THE ISSUANCE OF A PERMIT BASED ON THESE PLANS AND DOCUMENTS DOES NOT AUTHORIZE CONSTRUCTION TO BE EXECUTED IN VIOLATION OF ANY FEDERAL, STATE OR LOCAL REGULATIONS.

BUILDING BUREAU ACCEPTANCE
REVIEWED BY: STEVEN MA, PE, CBO

BPS

THIS SET OF THE PLANS AND SPECIFICATIONS MUST BE KEPT ON THE JOB SITE AT ALL TIMES IT IS UNLAWFUL TO MAKE ANY CHANGES OR ALTERATIONS ON THE PLANS WITHOUT AUTHORIZATION FROM THE BUILDING OFFICIAL. PERMITTEE SHALL CONFORM TO ALL APPLICABLE CODES, LAWS, REGULATIONS AND REQUIREMENTS OF ALL PUBLIC AUTHORITIES. ENFORCEMENT AGENCY APPROVAL IS OBTAINED BY ALL APPLICABLE DEPARTMENTS.

STRUCTURAL TECHNICAL SOLUTIONS INC.

PROJECT ADMINISTERED BY:
CITY OF PERRIS

101 NORTH "D" STREET
PERRIS, CA 92570

PROJECT NAME:
FIRE STATION 105 AND ADMINISTRATION BUILDING

PROJECT CIP: F077

2495 MURRIETA ROAD
PERRIS, CA 92585

ISSUE INFORMATION:

DATE:	INFORMATION:
11-26-25	95% CD SUBMITTAL
02-05-26	1 1st PC RESPONSE
02-19-26	2 2nd PC RESPONSE

SHEET INFORMATION:

STK PROJECT NO.: 365-03-25
SCALE: AS NOTED
DATE: NOVEMBER 2025
PLOT DATE: –
DRAWN BY: JN

SEAL:

LICENSED ARCHITECT ANTONIO FINAU No. C31476 REN. 07-31-27 STATE OF CALIFORNIA

SHEET TITLE:

CANOPY SECTION/ ELEVATION

SHEET NO.:

A1.7

04/14/2026 2:37PM J:\365-Cty of Perris\365-03-25 South Perris Fire Station\Architecture\A1.7 - CANOPY SECTION & ELEVATIONS.dwg

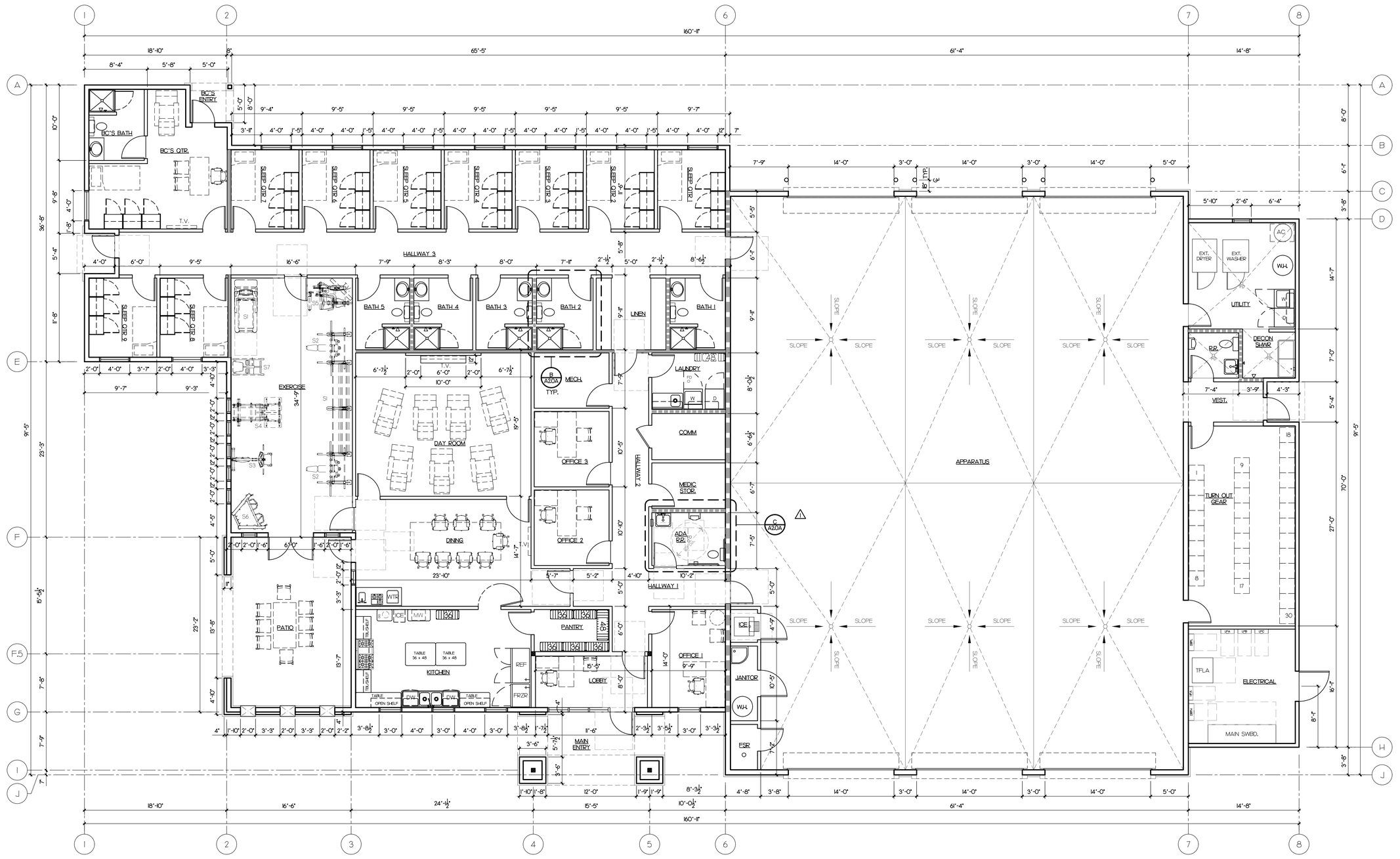

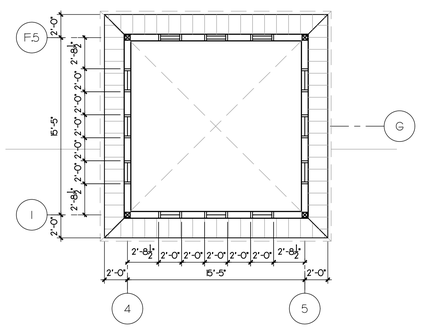

A CLERESTORY PLAN AT ENTRY TOWER

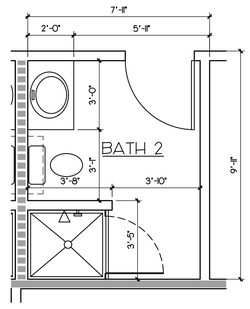

B ENLARGED BATH (TYP.)
SCALE: 3/8"=1'-0"

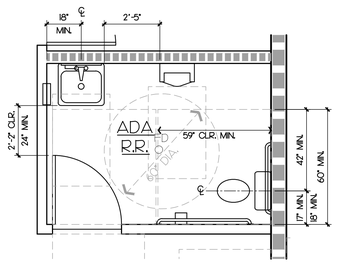

C ENLARGED ADA R.R.
SCALE: 3/8"=1'-0"

DIMENSION FLOOR PLAN

SCALE: 3/16"=1'-0" 4

STK ARCHITECTURE, INC.
42095 ZEVO DR., TEMECULA, CALIFORNIA 92590-3780
Phone: 951.296.9110 Fax: 951.296.6079 Email: stk@stkinc.com

CONSULTANT:

REVIEWED FOR CODE COMPLIANCE

THESE PLANS AND DOCUMENTS HAVE BEEN REVIEWED AND FOUND TO BE IN COMPLIANCE WITH THE APPLICABLE CODE REQUIREMENTS OF THE CONSTRUCTION INSPECTOR OF A PERMIT ISSUING AGENCY, SUBJECT TO APPROVAL BY OTHER DEPARTMENTS AND ANY NOTED CONDITIONS. THE STAMPING OF THESE PLANS AND DOCUMENTS IS NOT TO BE USED TO PERMIT THE APPROVAL OF ANY VIOLATION OF APPLICABLE CODES AND STANDARDS, NOR RELIEVE THE OWNER, DESIGN PROFESSIONAL OF RECORD, OR CONTRACTOR OF COMPLIANCE WITH THE APPLICABLE CODES AND STANDARDS. PLAN REVIEW OF DOCUMENTS DOES NOT AUTHORIZE CONSTRUCTION TO PROCEED IN VIOLATION OF ANY FEDERAL, STATE OR LOCAL REGULATION.

BUILDING BUREAU SOLUTIONS, INC.
REVIEWED BY: STEVENSON, PE, CBSC

THIS SET OF THE PLANS AND SPECIFICATIONS MUST BE KEPT ON THE JOB SITE AT ALL TIMES AND IT IS UNLAWFUL TO MAKE ANY CHANGES OR ALTERATIONS WITHOUT PERMISSION FROM THE CITY OF COLORADO. THE STRUCTURE IS NOT PERMITTED UNTIL FINAL APPROVAL IS GRANTED BY ALL APPLICABLE DEPARTMENTS.

BUILDING BUREAU SOLUTIONS INC.

PROJECT ADMINISTERED BY:
CITY OF PERRIS

101 NORTH "D" STREET
PERRIS, CA 92570

PROJECT NAME:
FIRE STATION 105
AND ADMINISTRATION
BUILDING

PROJECT CIP: F077

2495 MURRIETA ROAD
PERRIS, CA 92585

ISSUE INFORMATION:

DATE:	INFORMATION:
11-26-25	95% CD SUBMITTAL
02-05-26	1st PC RESPONSE
02-19-26	2nd PC RESPONSE

SHEET INFORMATION:

STK PROJECT NO.: 365-03-25
SCALE: AS NOTED
DATE: NOVEMBER 2025
PLOT DATE: –
DRAWN BY: JN

SEAL:

LICENSED ARCHITECT
ANTONIO FINALDI
No. C31476
REN. 07-31-27
STATE OF CALIFORNIA

SHEET TITLE:
DIMENSION
FLOOR PLAN -
FIRE STATION

SHEET NO.:
A2.0A

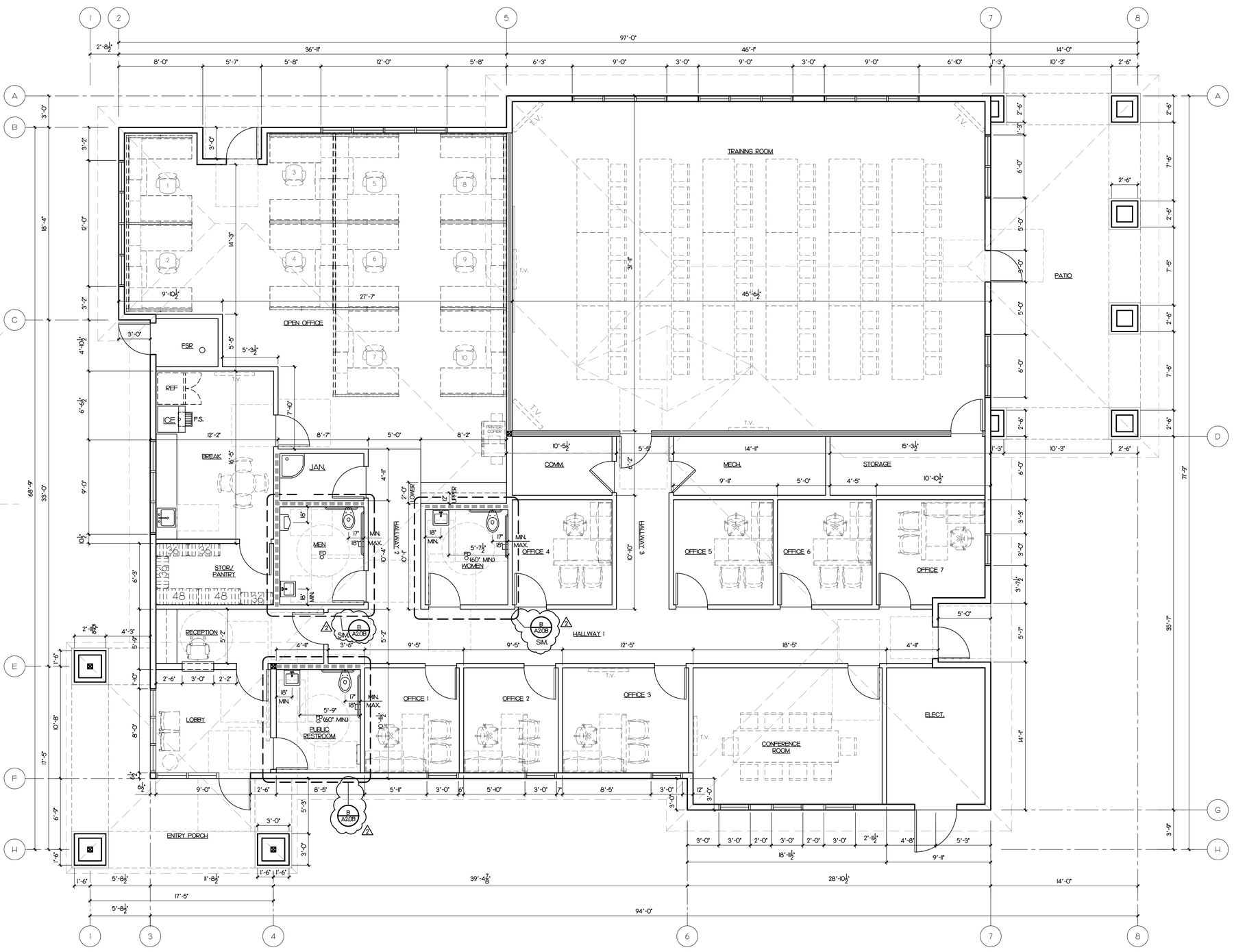

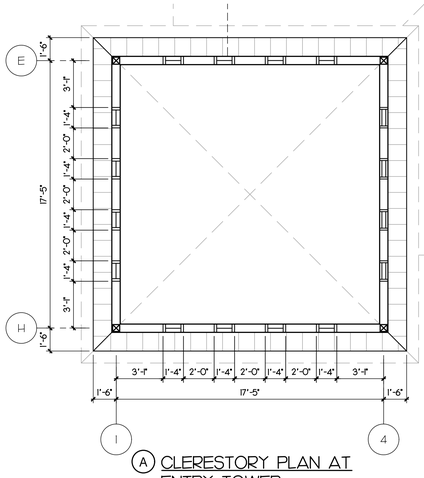

A CLERESTORY PLAN AT ENTRY TOWER

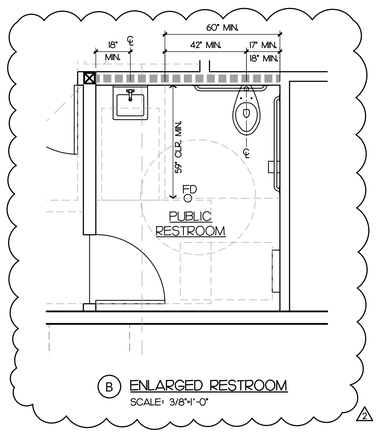

B ENLARGED RESTROOM
SCALE: 3/8"=1'-0"

DIMENSION FLOOR PLAN - ADMIN. BUILDING (ADDITIVE ALTERNATE #1)

SCALE: 1/4"=1'-0"

4

STK ARCHITECTURE, INC.
42095 ZEVO DR., TEMECULA, CALIFORNIA 92590-3780
Phone: 951.296.9110 Fax: 951.296.6079 Email: stk@stkinc.com

CONSULTANT:

REVIEWED FOR CODE COMPLIANCE

THESE PLANS AND DOCUMENTS HAVE BEEN REVIEWED AND FOUND TO BE IN COMPLIANCE WITH THE APPLICABLE CODE REQUIREMENTS OF THE JURISDICTION. ISSUANCE OF A PERMIT BASED ON THESE PLANS, SUBJECT TO APPROVAL BY OTHER DEPARTMENTS AND ANY NOTED CONDITIONS, THE STAMPING OF THESE PLANS AND THE FILE HAS NOT BEEN CHECKED FOR BY THE APPROVAL OF ANY VIOLATIONS OF APPLICABLE CODES AND STANDARDS, NOR RELIEVE THE OWNER, DESIGN PROFESSIONAL OF RECORD, OR CONTRACTOR OF COMPLIANCE WITH THE APPLICABLE CODES AND STANDARDS. PLAN REVIEW OF DOCUMENTS DOES NOT AUTHORIZE CONSTRUCTION TO PROCEED IN VIOLATION OF ANY FEDERAL, STATE OR LOCAL REGULATION.

BUILDING BUREAU SOLUTIONS, INC.
REVIEWED BY: STEVEN M. PE, CA

THIS SET OF THE PLANS AND SPECIFICATIONS MUST BE KEPT ON THE JOB SITE AT ALL TIMES AND IT IS UNLAWFUL TO MAKE ANY CHANGES OR ALTERATIONS WITHOUT PERMISSION FROM THE CITY ENGINEER AND THE STRUCTURE(S) IS NOT PERMITTED UNTIL FINAL APPROVAL IS OBTAINED BY ALL APPLICABLE DEPARTMENTS.

BUILDING BUREAU SOLUTIONS INC.

PROJECT ADMINISTERED BY:
CITY OF PERRIS

101 NORTH "D" STREET
PERRIS, CA 92570

PROJECT NAME:
FIRE STATION 105
AND ADMINISTRATION
BUILDING

PROJECT CIP: F077

2495 MURRIETA ROAD
PERRIS, CA 92585

ISSUE INFORMATION:

DATE:	INFORMATION:
11-26-25	95% CD SUBMITTAL
02-05-26	1 1st PC RESPONSE
02-19-26	2 2nd PC RESPONSE

SHEET INFORMATION:

STK PROJECT NO.: 365-03-25
SCALE: AS NOTED
DATE: NOVEMBER 2025
PLOT DATE: –
DRAWN BY: JN

SEAL:

LICENSED ARCHITECT
ANTONIO FINALDI
No. C31476
REN. 07-31-27
STATE OF CALIFORNIA

SHEET TITLE:
DIMENSION FLOOR PLAN - ADMIN. BLDG.

SHEET NO.:
A2.0B

KITCHEN EQUIPMENT

ITEM	QTY	DESCRIPTION	MANUF./MODEL	PROVIDED BY	INSTALLED BY
1	1	2 COMPARTMENT SINK W/ 24" DRAINBOARDS	EAGLE 88" MODEL No. FN2036-2-24-14/3, WITH WALL MOUNTED SHELVES ABV DRAIN BOARDS, S.S. TUBULAR 16"x36" No. 600TWMS1636, S.S. SOLID 18"x36" No. 600WSI836	CONTRACTOR	CONTRACTOR
2	1	S.S. WORK TABLE W/ BACK SPLASH AND 2 UNDER SHELVES	REGENCY: 24"x48" WORK TABLE No. 600TSB2448S, ADJUSTABLE UNDER SHELF No. 600UT2448	CONTRACTOR	CONTRACTOR
3	1	S.S. WORK TABLE W/ BACK SPLASH, UNDER SHELF AND DRAWERS	REGENCY: 24"x72" WORK TABLE No. 600TSB2472S, DRAWERS-TRIPLE STACKED No. 600DR2015ST3	CONTRACTOR	CONTRACTOR
4	2	S.S. WORK TABLE W/ BACK SPLASH, DRAWER AND OVERSHELF	REGENCY: 24"x36" WORK TABLE WITH OVER SELF AND UNDER SHELF, No. 600WT2436KIT	CONTRACTOR	CONTRACTOR
5	2	S.S. OPEN WALL CABINET-48"	REGENCY: 15"x48" S.S. No. 600WC01548	CONTRACTOR	CONTRACTOR
6	1	S.S. WORK TABLE W/ UNDER-SHELF	REGENCY: 36"x48" WORK TABLE WITH UNDER SHELF, No. 600TS3648S	CONTRACTOR	CONTRACTOR
7	1	S.S. WORK TABLE W/ OPEN-BASE	ADVANCE TABCO: 36"x48" 16 GA S.S. TABLE, WITH OPEN BASE, No. TSAG-364	CONTRACTOR	CONTRACTOR
8	1	S.S. WORK TABLE W/ UNDER-SHELF	REGENCY: 18"x24" 16 GA S.S. TABLE, WITH UNDER SHELF., No. 600TSI8245	CONTRACTOR	CONTRACTOR
9	1	S.S. SHELF UNIT-SOLID SHELVES	REGENCY: 18"x36"x64"H, SOLID S.S. SHELVING, MOBILE	CONTRACTOR	CONTRACTOR
10	7	S.S. SHELF UNIT-WIRE SHELVES	REGENCY: (1) 12"x36"x74"H and (6) 18"x48"x74"H (SEE PLAN), WIRE S.S. STATIONARY SHELVING	CONTRACTOR	CONTRACTOR
11	1	S.S. BEVERAGE TABLE W/ SINK	REGENCY: 30" X 72" 16 GA S.S. BEV. TABLE W/RIGHT SINK AND SWIVEL GOOSENECK FAUCET. No. 600TBV3072RF	CONTRACTOR	CONTRACTOR
12	1	S.S. WORK TABLE WITH SINK (LAUNDRY ROOM)	REGENCY: 24"x48", 16 GA, LEFT SIDE SINK No. 60ST2448L	CONTRACTOR	CONTRACTOR
13	4	S.S WIRE SHELF (LAUNDRY ROOM)	REGENCY: 12"x48"x74"H, STATIONARY	CONTRACTOR	CONTRACTOR
14	3	S.S. SOLID SHELF, 12" x 48"	REGENCY: 18ga SS WALL MOUNTED SHELVES, No. 600WSI248. LOCATIONS: TWO • LAUNDRY, ONE • UTILITY	CONTRACTOR	CONTRACTOR
				CONTRACTOR	CONTRACTOR
A-1	1	REFRIGERATOR-COMMERCIAL 2-DR	SEE SPECS	CONTRACTOR	CONTRACTOR
A-2	1	FREEZER-COMMERCIAL 1-DR	SEE SPECS	CONTRACTOR	CONTRACTOR
A-3	2	DISHWASHER	SEE SPECS	CONTRACTOR	CONTRACTOR
A-4	1	RANGE-48"	SEE SPECS	CONTRACTOR	CONTRACTOR
A-5	1	HOOD	SEE SPECS	CONTRACTOR	CONTRACTOR
A-6	1	ICE MAKER	SEE SPECS	CONTRACTOR	CONTRACTOR
A-7	1	MICROWAVE	SEE SPECS	CONTRACTOR	CONTRACTOR
A-8	1	COFFEE BREWER	SEE SPECS	CONTRACTOR	CONTRACTOR
A-9	1	R.O. UNDER COUNTER SYSTEM WITH COUNTERTOP HOT/COLD DISPENSER	SEE PLUMBING PLANS	CONTRACTOR	CONTRACTOR
OTHER EQUIPMENT					
	2	COMMERCIAL ICE MAKER	SEE SPECS	CONTRACTOR	CONTRACTOR
	2	WASHER	SEE SPECS	CONTRACTOR	CONTRACTOR
	2	DRYER	SEE SPECS	CONTRACTOR	CONTRACTOR
	6	FIRE EXTINGUISHER	SEE SPECS	CONTRACTOR	CONTRACTOR
	30	METAL GEAR LOCKER	SEE SPECS	CONTRACTOR	CONTRACTOR
	1	EXTRACTOR WASHER	SEE SPECS	CONTRACTOR	CONTRACTOR
	1	EXTRACTOR DRYER	SEE SPECS	CONTRACTOR	CONTRACTOR
	1	DECON WASH STATION	SEE PLUMBING PLANS	CONTRACTOR	CONTRACTOR
	1	AIR COMPRESSOR	SEE SPECS	CONTRACTOR	CONTRACTOR
	1	VEHICLE EXHAUST SYSTEM	SEE MECHANICAL PLANS	CONTRACTOR	CONTRACTOR
	16	CEILING FANS	SEE SPECS	CONTRACTOR	CONTRACTOR
	2	LARGE FORMAT CEILING FANS	SEE MECHANICAL PLANS	CONTRACTOR	CONTRACTOR
	1	AUTO TRANSFER SWITCH	SEE ELECTRICAL PLANS	CONTRACTOR	CONTRACTOR
	1	EMERGENCY GENERATOR	SEE ELECTRICAL PLANS	CONTRACTOR	CONTRACTOR
	1	1,000GAL DIESEL FUEL TANK	SEE SPECS	CONTRACTOR	CONTRACTOR
	1	499 GAL LPG TANK	CONTRACTOR TO PROVIDE CONC. PADS & BOLLARDS	OWNER	CONTRACTOR
	1	COMPRESSED AIR HOSE REEL	COXREELS T SERIES, EZ-TSH-3100 OR APPROVED EQUAL	CONTRACTOR	CONTRACTOR
	1	ALERT SYSTEM	SEE DATA 2.0-2.2	CONTRACTOR	CONTRACTOR
	1	•TELECOMMUNICATIONS SYSTEM•	SEE DATA 2.0, APPENDIX D, AND APPENDIX E (CONTRACTOR TO PROVIDE PATHWAYS)	CONTRACTOR	CONTRACTOR
	1	••FURNITURE••	SEE SPECS	CONTRACTOR	CONTRACTOR
	1	•••EXERCISE EQUIPMENT•••	SEE SPECS & APPENDIX C	CONTRACTOR	CONTRACTOR
		-	-		

EQUIPMENT LIST

SCALE: N.T.S. (2)

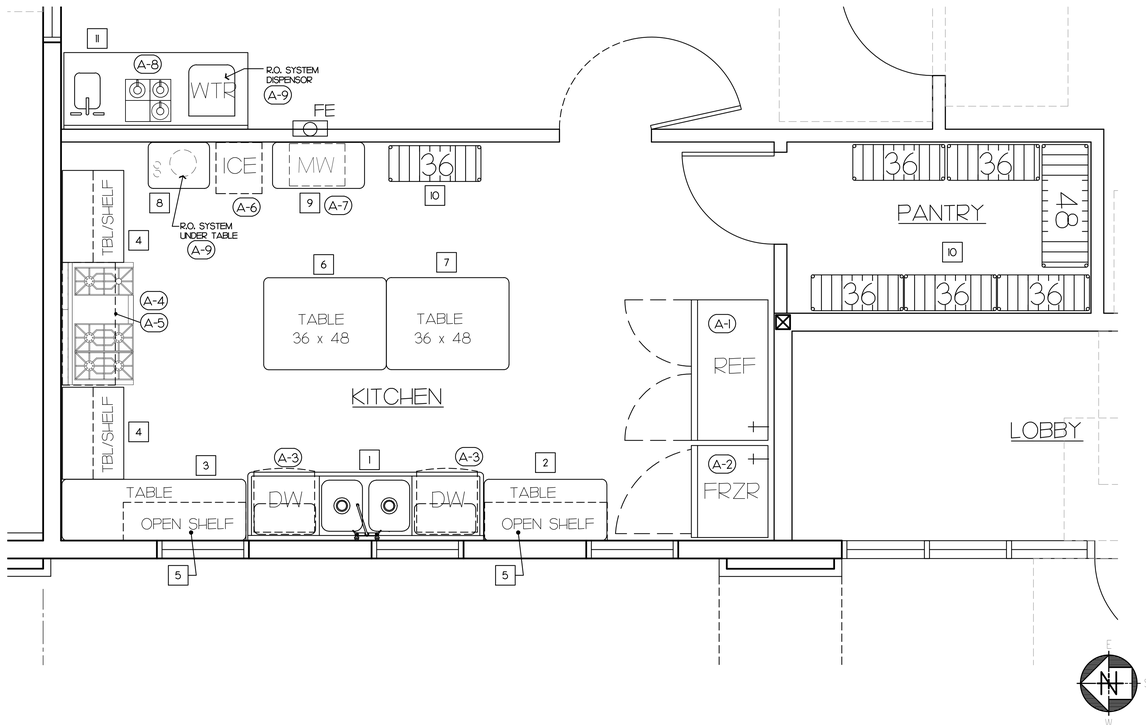

KITCHEN EQUIPMENT PLAN

SCALE: 1/2"=1'-0" (1)

NOTES:

- "OWNER" REFERS TO THE CITY OF PERRIS.

•TELECOMMUNICATIONS SYSTEM•
CONTRACTOR TO PURCHASE AND TURN OVER THE INFORMATION TECHNOLOGY EQUIPMENT TO OWNER - SEE APPENDICES D & E

••FURNITURE••
CONTRACTOR TO PURCHASE AND INSTALL FURNITURE:
DAY ROOM: RECLINERS.
DINING: TABLE & CHAIRS.
PANTRY: WIRE SHELVES.
SLEEP QUARTERS: BED FRAMES & MATTRESSES
OFFICES: CHAIRS & DESKS.
PATIO: TABLE & CHAIRS.

- SEE SPECIFICATIONS.

•••EXERCISE EQUIPMENT•••
CONTRACTOR TO PURCHASE AND INSTALL ALL EXERCISE EQUIPMENT LISTED IN SPECIFICATION SECTION 11 6623 AND SHOWN IN SAMPLE INVOICE IN APPENDIX C. EQUIPMENT NOT SHOWN IN PLANS / SHALL BE INSTALLED PER THE FIRE DEPARTMENT'S DIRECTIONS.

STK
42095 ZEVO DR., TEMECULA, CALIFORNIA 92590-3780
Phone: 951.296.9110 Fax: 951.296.6079 Email: stk@stkinc.com

CONSULTANT:

REVIEWED FOR CODE COMPLIANCE

THESE PLANS AND DOCUMENTS HAVE BEEN REVIEWED AND FOUND TO BE IN COMPLIANCE WITH THE CODES ADOPTED BY THE CITY OF PERRIS. JURISDICTION. ISSUANCE OF A PERMIT IS NOT IN COMPLIANCE, SUBJECT TO APPROVAL BY OTHER DEPARTMENTS AND ANY NOTED CONDITIONS. THE ISSUANCE OF A PERMIT BASED ON PLANS, SPECIFICATIONS OR OTHER APPROVAL OF ANY VIOLATIONS OF ANY CODES AND STANDARDS. NOR RELIEVE THE OWNER, DESIGN PROFESSIONAL OF RECORD, OR CONTRACTOR OF RESPONSIBILITY FOR COMPLIANCE. APPROVAL OF CONSTRUCTION DOCUMENTS DOES NOT AUTHORIZE CONSTRUCTION TO BE EXECUTED IN VIOLATION OF ANY FEDERAL, STATE OR LOCAL REGULATIONS.

BUILDING BUREAU ACCEPTANCE
REVIEWED BY: STEVEN M. PEA

THIS SET OF THE PLANS AND SPECIFICATIONS MUST BE KEPT ON THE JOB SITE AT ALL TIMES IT IS UNLAWFUL TO MAKE ANY CHANGES OR ALTERATIONS ON THE PLANS WITHOUT AUTHORIZATION FROM THE CITY OF PERRIS. IT IS UNLAWFUL TO OCCUPY ANY BUILDING FOR WHICH A PERMIT IS REQUIRED BY ALL APPLICABLE DEPARTMENTS.

STK SOLUTIONS INC.

PROJECT ADMINISTERED BY:
CITY OF PERRIS

101 NORTH "D" STREET
PERRIS, CA 92570

PROJECT NAME:
FIRE STATION 105 AND ADMINISTRATION BUILDING

PROJECT CIP: F077

2495 MURRIETA ROAD
PERRIS, CA 92585

ISSUE INFORMATION:

DATE:	INFORMATION:
11-26-25	95% CD SUBMITTAL
02-05-26	1 1st PC RESPONSE
02-19-26	2 2nd PC RESPONSE
02-22-26	3 3rd PC RESPONSE
04-27-26	4 4th PC RESPONSE

SHEET INFORMATION:

STK PROJECT NO.: 365-03-25
SCALE: AS NOTED
DATE: NOVEMBER 2025
PLOT DATE: –
DRAWN BY: JN

SEAL:

LICENSED ARCHITECT ANTONIO FINALDI No. C31478 REN. 07-31-27 STATE OF CALIFORNIA

SHEET TITLE:
EQUIPMENT FLOOR PLAN - FIRE STATION

SHEET NO.:
A2.1

J:\365-City of Perris\365-03-25 South Perris Fire Station\Architect\ArchA2.1 - FS EQUIPMENT PLAN.dwg
05/05/2026 1:08PM

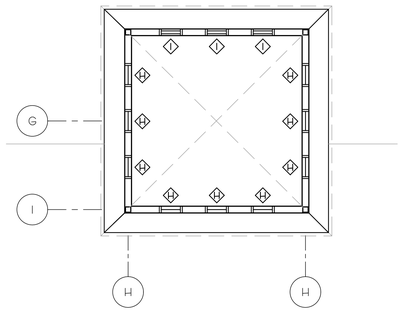

CLERESTORY PLAN AT ENTRY TOWER

WALL LEGEND

EXTERIOR WALL: 2"x6" WOOD STUDS @ 16" O.C. W/ PLYWOOD PER STRUCT. DRAWINGS W/ CEMENT CEMENT PLASTER W/ R-21 BATT INSULATION & ONE LAYER OF 5/8" TYPE "X" GYP. BD. ON INTERIOR FACE. UNLESS OTHERWISE NOTED.

NON-RATED WALL: 2"x6" WOOD STUDS @ 16" O.C. w/ TWO LAYERS OF 5/8" TYPE "X" GYP. BD. FROM FLOOR TO BOTTOM OF ROOF ON APPARATUS BAY SIDE AND ONE LAYER OF 5/8" TYPE "X" GYP. BD. FROM FLOOR TO BOTTOM OF ROOF ON LIVING QUARTERS SIDE W/ PLYWOOD PER STRUCT. DRAWING. USE R-21 BATT INSULATION TO FILL CAVITY. △2

1/2 HOUR WALL: 2x6 OR 2x4 WOOD STUDS @ 16" O.C. W/ 5/8" TYPE "X" GYP. BD. ON EACH FACE W/ (SOUND) INSULATION FULL HEIGHT OF WALL. REFER TO FIRE RATED ASSEMBLIES, DETAIL 5/A2.6A.

INTERIOR LOAD BEARING WALL: 2"x4" OR 2"x6" WOOD STUDS @ 16" O.C. W/ PLYWOOD PER STRUCT. & 5/8" TYPE "X" GYP. BD. ON EACH FACE (UNLESS OTHERWISE NOTED W/ (SOUND) INSULATION FULL HEIGHT OF WALL.

INTERIOR PLUMBING WALL: 2"x6" WOOD STUDS @ 16" O.C. W/ 5/8" TYPE "X" GYP. BD. ON EACH FACE (UNLESS OTHERWISE NOTED) W/ (SOUND) INSULATION FULL HEIGHT OF WALL.

INTERIOR WALL: 2"x4" WOOD STUDS @ 16" O.C. W/ 5/8" TYPE "X" GYP. BD. ON EACH FACE (UNLESS OTHERWISE NOTED) W/ (SOUND) INSULATION FULL HEIGHT OF WALL.

NOTE: PROVIDE WATER RESISTANT GYP. BD. BEHIND ALL WET AREAS.

NOTE: COORDINATE / SEE STRUCTURAL DRAWINGS FOR ALL +6" HIGH CONC. CURB - CURB WIDTH TO MATCH WALL STUD WIDTH. (TYP. AT ALL EXTERIOR WALLS AND ALL APPARATUS WALLS)

NOTE: ALL PIPING, CONDUITS, WIRES, DUCTS, ETC. SHALL BE CONCEALED INSIDE WALLS OR ATTIC. NO EXCEPTIONS.

NOTE: MIXED-USE BUILDING SEPARATION PROPOSED PER CBC 508.3 NONSEPARATED OCCUPANCIES △1

ROOM IDENTIFICATION SIGNS

QTY.	SIGNS
(2)	APPARATUS
(5)	BATHROOM (1 to 5)
(1)	COMM. ROOM
(2)	EXERCISE
(1)	MECHANICAL ROOM
(1)	LAUNDRY
(1)	MEDIC STORAGE
(3)	OFFICE (1 to 3)
(9)	SLEEP QUARTER (1 to 9)
(1)	BC'S QUARTER
(2)	TURNOUT GEAR
(1)	RESTROOM
(1)	UTILITY
(1)	ICE MACHINE
(1)	JANITOR
(1)	FIRE SPRINKLER RISER

KEY NOTE

1. CORNER GUARDS (PVC) - TYP. OF 8.
2. METAL MESH GEAR LOCKERS - TYP. OF 30. FLOOR MOUNTED AT CENTER OF ROOM. WALL MOUNTED AT ROOM PERIMETER. PROVIDE BACKING AS REQUIRED.
3. KNOX BOX - PROVIDE PER CITY OF PERRIS FIRE DEPT. REQUIREMENTS.
4. WARDROBE LOCKERS, TYP. OF 30 - SEE 8/A6.1
5. SEMI-RECESSED FIRE EXTINGUISHER, RATED 2-A:10-B:C HAZARD TYPE (TYP. OF 6) - SEE 7/A6.2.
6. FLOOR DRAIN AT LAUNDRY, RESTROOM & UTILITY - SEE PLUMBING.
7. FIRE SPRINKLER RISER.
8. 1/2 HOUR RATED WALL & CEILING ASSEMBLY AT ALL SLEEP QUARTERS - TYP. FIRE PARTITION CONTINUITY SHALL EXTEND FROM THE TOP OF THE FOUNDATION OR FLOOR / CEILING ASSEMBLY BELOW & BE SECURELY ATTACHED TO THE UNDERSIDE OF THE FLOOR OR SHEATHING, DECK OR SLAB ABOVE OR THE UNDERSIDE OF A FLOOR / CEILING OR ROOF / CEILING ASSEMBLY HAVING A FIRE-RESISTANCE RATING OF NOT LESS THAN 1/2 HOUR.
9. WALL AND DOOR SIGNAGE - SEE 8/A2.4.
10. CORNER GUARDS (STAINLESS STEEL), TYP. OF 3 - SEE 13/A6.1
11. 6" DIA. x 4' HIGH CONCRETE FILLED BOLLARD, TYP. OF 6 - SEE 12/A1.3. PAINT OSHA YELLOW.
12. ICE MACHINE & FLOOR DRAIN - SEE SPECS & PLUMBING.
13. FLOOR DRAIN AT APPRATUS, TYP. OF 6 - SEE PLUMBING & CIVIL. PROVIDE SLOPE AS REQUIRED.
14. 9" CONCRETE PAVING & SEALER (4,500 PSI) W/ #4 REBAR @ 24" O.C. EACH WAY AT MID-SLAB OVER VAPOR BARRIER, 2" CLEAN SAND & 10" CLASS II BASE (APPARATUS ONLY) - SEE CIVIL.
15. LINE OF ROOF ABOVE SHOWN DASHED - TYP.
16. OFFICE FURNITURE BY OWNER (NIC).
17. LINE OF SOFFIT/CEILING ABOVE.
18. KITCHEN EQUIPMENT - SEE SHEET A2.1 & SPECIFICATIONS.
19. DOORBELL - SEE ELECT. & DATA PLAN, SHEET D2.0. PROVIDE A SIGN ABOVE THE DOORBELL (OR SIMILAR) THAT READS: "RING DOORBELL FOR ASSISTANCE" IN CASE OF EMERGENCY DIAL 9-1-1 IMMEDIATELY".
20. EXERCISE EQUIPMENT - SEE SPECS & EXHIBIT "C".
21. ROOM IDENTIFICATION / SIGN - SEE 10/A6.2.
22. HEAT PUMP UNIT ON +4" RAISED CONCRETE PAD, TYP. OF 13 - SEE MECH. & FIELD VERIFY.
23. THIS DOOR TO BE ABLE TO OPEN/SWING 180-DEGREE WITH DOOR STOP. PROVIDE NECESSARY HARDWARE AS REQUIRED - FIELD VERIFY.
24. EXTRACTOR WASHER & DRYER ON MOUNTING BRACKETS PER SPECS. PROVIDE CLEARANCES AS REQUIRED, INSTALL PER MANUF.'S RECOMMENDATIONS, AND COORDINATE UTILITY CONNECTIONS WITH ELECT. & PLUMBING - FIELD VERIFY.
25. RECLINER, TYP. OF 8 - SEE SPECIFICATIONS.
26. MATTRESS & FRAME, TYP. OF 10 - SEE SPECIFICATIONS.
27. DINING FURNITURE - SEE SPECIFICATIONS.
28. OUTDOOR/PATIO FURNITURE - SEE SPECIFICATIONS.

NOTE: APPARATUS IS FOR PARKING ONLY. NO VEHICLE MAINTENANCE SHALL OCCUR IN THE FACILITY.

OCCUPANCY TYPES:

R-2 OCCUPANCY (WITH ACCESSORY OF B OCCUPANCY): LIVING SPACES-KITCHEN, DAY ROOM, DINING, SLEEP QUARTERS, RESTROOMS, EXERCISE ROOM, LAUNDRY.

B OCCUPANCY SPACE CONSISTS OF OFFICES AND LOBBY.

S-2 OCCUPANCY: APPARATUS BAY ROOM.

SEE WINDOW SCHEDULE, A2.3A (ARROW INDICATES OPENING DIRECTION)

SEE DOOR SCHEDULE, A2.3A

SEE WINDOW BLINDS SCHEDULE, A2.3A

REFERENCE FLOOR PLAN - FIRE STATION

SCALE: 3/16"=1'-0"

4

STK
42095 ZEVO DR., TEMECULA, CALIFORNIA 92590-3780
Phone: 951.296.9110 Fax: 951.296.6079 Email: stk@stkinc.com

CONSULTANT:

REVIEWED FOR CODE COMPLIANCE

THESE PLANS AND DOCUMENTS HAVE BEEN REVIEWED AND FOUND TO BE IN COMPLIANCE WITH THE CODES AND ORDINANCES ADOPTED IN THIS JURISDICTION. ISSUANCE OF A PERMIT IS RECOMMENDED, SUBJECT TO APPROVAL BY OTHER DEPARTMENTS AND ANY NOTED CONDITIONS. THE ISSUANCE OF A PERMIT BASED ON THESE PLANS AND DOCUMENTS, THE APPROVAL OF ANY VIOLATIONS OF APPLICABLE CODES AND STANDARDS, NOR RELIEVE THE OWNER, DESIGN PROFESSIONAL OF RECORD, OR CONTRACTOR OF RESPONSIBILITY FOR COMPLYING WITH APPLICABLE REQUIREMENTS. THESE DOCUMENTS DOES NOT AUTHORIZE CONSTRUCTION SUBJECTED TO IN VIOLATION OF ANY FEDERAL, STATE OR LOCAL REGULATIONS.

BUILDING BUREAU / ELECTRONIC
REVIEWED BY: STEVEN M. PS, CBO

THIS SET OF THE PLANS AND SPECIFICATIONS MUST BE KEPT ON THE JOB SITE AT ALL TIMES DURING CONSTRUCTION. ANY CHANGES, MODIFICATIONS OR DEVIATIONS WITHOUT ACKNOWLEDGEMENT FROM THE CITY DEPARTMENT FOR WHICH CHANGES IS MADE MAY CAUSE THE APPLICATION TO BE DENIED BY ALL APPLICABLE DEPARTMENTS.

ELECTRONIC FILE SOLUTIONS INC.

PROJECT ADMINISTERED BY:
CITY OF PERRIS

101 NORTH "D" STREET
PERRIS, CA 92570

PROJECT NAME:
FIRE STATION 105 AND ADMINISTRATION BUILDING

PROJECT CIP: F077

2495 MURRIETA ROAD
PERRIS, CA 92585

ISSUE INFORMATION:

DATE:	INFORMATION:
11-26-25	95% CD SUBMITTAL
02-05-26	△1 1st PC RESPONSE
02-19-26	△2 2nd PC RESPONSE
02-22-26	△3 3rd PC RESPONSE
04-27-26	△4 4th PC RESPONSE

SHEET INFORMATION:

STK PROJECT NO.: 365-03-25
SCALE: AS NOTED
DATE: NOVEMBER 2025
PLOT DATE: –
DRAWN BY: JN

SEAL:

LICENSED ARCHITECT ANTONIO FINALDI No. C31476 REN. 07-31-27 STATE OF CALIFORNIA

SHEET TITLE:
REFERENCE FLOOR PLAN - FIRE STATION

SHEET NO.:
A2.2A

J:\365-City of Perris\365-03-25 South Perris Fire Station\Architect\sheets\A2.2A - FS REF FLOOR PLAN.dwg
05/12/2026 10:39AM

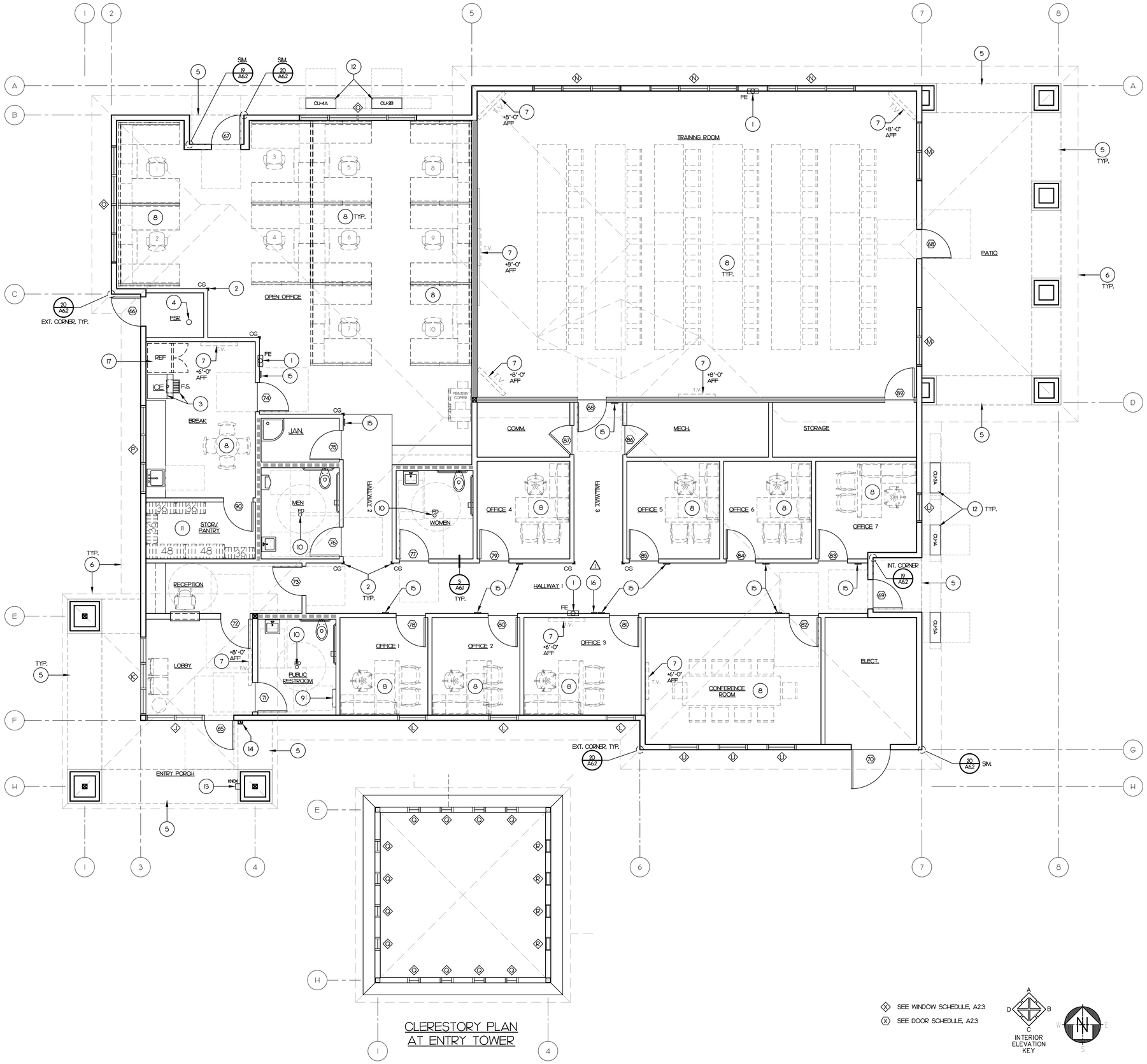

CLERESTORY PLAN AT ENTRY TOWER

- SEE WINDOW SCHEDULE, A2.3
- SEE DOOR SCHEDULE, A2.3

INTERIOR ELEVATION KEY

REFERENCE FLOOR PLAN - ADMIN. BUILDING (ADDITIVE ALTERNATE #1)

SCALE: 1/4"=1'-0"

8

KEY NOTE

1. FIRE EXTINGUISHER & CABINET - TYP. OF 3. SEE 7/A6.2
2. CORNER GUARD - TYP. OF 7.
3. ICE MAKER WITH FLOOR DRAIN. PROVIDE POWER & WATER CONNECTIONS AS REQUIRED.
4. FIRE SPRINKLER RISER.
5. SOFFIT LINE ABOVE SHOWN DASHED - TYP.
6. ROOF LINE ABOVE SHOWN DASHED - TYP.
7. PROVIDE POWER & DATA FOR T.V. (TYP. OF 9) AT EITHER +6'-0" A.F.F. OR AT +8'-0" A.F.F. - FIELD VERIFY & SEE ELECT. DWGS.
8. FURNITURE BY OWNER - TYP.
9. BABY CHANGING STATION PER SPECS. INSTALL PER MANUF.'S RECOMMENDATIONS.
10. FLOOR DRAIN, TYP. OF 3 - SEE PLUMBING.
11. WIRE SHELVES BY OWNER.
12. CONDENSING UNIT ON +4" RAISED CONCRETE PAD, TYP. OF 5 - SEE MECH. & FIELD VERIFY.
13. KNOX BOX - PROVIDE PER CITY OF PERRIS FIRE DEPT. REQUIREMENTS.
14. DOORBELL - SEE ELECT. & DATA PLAN, SHEET D2.1 PROVIDE A SIGN ABOVE THE DOORBELL (OR SIMILAR) THAT READS: "RING DOORBELL FOR ASSISTANCE" IN CASE OF EMERGENCY DIAL 9-1-1 IMMEDIATELY".
15. ROOM IDENTIFICATION / SIGN - SEE 10/A6.2.
16. ACCESSIBLE EXIT ROUTE SIGN WITH ARROW & BRAILLE - SEE 4/A2.4. ⚠1
17. REFRIGERATOR: LG LRDCS2603S BOTTOM FREEZER (OR EQUAL)
    - A. CAPACITY: 26 CU. FT. REFRIGERATOR 17.20 CU. FT., FREEZER 8.90 CU. FT.
    - B. ENERGY STAR QUALIFIED.
    - C. STAINLESS STEEL FINISH.
    - D. GLASS SHELVES.

WALL LEGEND

EXTERIOR WALL: 2"x6" WOOD STUDS @ 16" O.C. W/ PLYWOOD PER STRUCT. DRAWINGS W/ CEMENT CEMENT PLASTER W/ R-21 BATT INSULATION & ONE LAYER OF 5/8" TYPE "X" GYP. BD. ON INTERIOR FACE. UNLESS OTHERWISE NOTED.

INTERIOR LOAD BEARING WALL: 2"x6" WOOD STUDS @ 16" O.C. W/ PLYWOOD PER STRUCT. & 5/8" TYPE "X" GYP. BD. ON EACH FACE (UNLESS OTHERWISE NOTED) W/ (SOUND) INSULATION FULL HEIGHT OF WALL.

INTERIOR PLUMBING WALL: 2"x6" WOOD STUDS @ 16" O.C. W/ 5/8" TYPE "X" GYP. BD. ON EACH FACE (UNLESS OTHERWISE NOTED) W/ (SOUND) INSULATION FULL HEIGHT OF WALL.

INTERIOR WALL: 2"x4" WOOD STUDS @ 16" O.C. W/ 5/8" TYPE "X" GYP. BD. ON EACH FACE (UNLESS OTHERWISE NOTED) W/ (SOUND) INSULATION FULL HEIGHT OF WALL.

NOTE: PROVIDE WATER RESISTANT GYP. BD. BEHIND ALL WET AREAS.

NOTE: COORDINATE / SEE STRUCTURAL DRAWINGS FOR ALL +6" HIGH CONC. CURB - CURB WIDTH TO MATCH WALL STUD WIDTH (TYP. AT ALL EXTERIOR WALLS AND ALL APPARATUS WALLS)

NOTE: ALL PIPING, CONDUITS, WIRES, DUCTS, ETC. SHALL BE CONCEALED INSIDE WALLS OR ATTIC. NO EXCEPTIONS.

STK
42095 ZEVO DR., TEMECULA, CALIFORNIA 92590-3780
Phone: 951.296.9110 Fax: 951.296.6079 Email: stk@stkinc.com

CONSULTANT:

REVIEWED FOR CODE COMPLIANCE

THESE PLANS AND DOCUMENTS HAVE BEEN REVIEWED AND FOUND TO BE IN COMPLIANCE WITH THE CODES AND ORDINANCES OF THE CITY OF PERRIS JURISDICTION. ISSUANCE OF A PERMIT IS NOT CONSIDERED AS APPROVAL BY OTHER DEPARTMENTS AND ANY NOTED CONDITIONS THE PERMIT MAY BE REQUIRED. THE CITY OF PERRIS DOES NOT GIVE APPROVAL OF ANY VIOLATIONS OF APPLICABLE CODES AND STANDARDS. NOR RELIEVE THE OWNER, DESIGN PROFESSIONAL OF RECORD, OR CONTRACTOR OF RESPONSIBILITY FOR ERRORS, OMISSIONS, OR CONFLICTS IN THE PLANS AND DOCUMENTS DOES NOT AUTHORIZE CONSTRUCTION THAT IS REJECTED IN VIOLATION OF ANY FEDERAL, STATE OR LOCAL REGULATION.

BUILDING BUREAU ADDITIONAL INC.
REVIEWED BY: STEVEN MA, P.E. CASp

THIS SET OF THE PLANS AND SPECIFICATIONS MUST BE KEPT ON THE JOB SITE AT ALL TIMES IT IS UNLAWFUL TO MAKE ANY CHANGES OR ALTERATIONS ON THE PLANS WITHOUT AUTHORIZATION FROM THE CITY DEPARTMENT. THE APPROVAL OF THESE PLANS DOES NOT PERMIT THE PERFORMANCE OF UNSAFE PRACTICES THAT ARE DANGEROUS TO LIFE, LIMB, PROPERTY OR PUBLIC WELFARE. IT IS UNLAWFUL TO OPERATE BY ALL APPLICABLE DEPARTMENTS.

STK SOLUTIONS INC.

PROJECT ADMINISTERED BY:
CITY OF PERRIS

101 NORTH "D" STREET
PERRIS, CA 92570

PROJECT NAME:
FIRE STATION 105 AND ADMINISTRATION BUILDING

PROJECT CIP: F077

2495 MURRIETA ROAD
PERRIS, CA 92585

ISSUE INFORMATION:

DATE:	INFORMATION:
11-26-25	95% CD SUBMITTAL
02-05-26	⚠1 1st PC RESPONSE
02-19-26	⚠2 2nd PC RESPONSE
02-22-26	⚠3 3rd PC RESPONSE
04-27-26	⚠4 4th PC RESPONSE

SHEET INFORMATION:

STK PROJECT NO.: 365-03-25
SCALE: AS NOTED
DATE: NOVEMBER 2025
PLOT DATE: –
DRAWN BY: JN

SEAL:

LICENSED ARCHITECT ANTONIO FINLAY No. C31476 REN. 07-31-27 STATE OF CALIFORNIA

SHEET TITLE:
REFERENCE FLOOR PLAN - ADMIN. BLDG.

SHEET NO.:
A2.2B

J:\365-City of Perris\365-03-25 South Perris Fire Station\Architecture\A2.2B - ADMIN BLDG REF FLOOR PLAN.dwg
05/06/2026 1:00PM

DOOR SCHEDULE

	DOOR							FIRE RATING LABEL (MIN)	FRAME				HARDWARE	
		SIZE								DETAIL, SHEET A2.4			GROUP (SEE SPEC'S)	
	MARK	WD-HT	THK	TYPE	MATL	FIN	GLAZING		MATL	HEAD	JAMB	SILL		REMARKS
FIRE STATION	1	3070	1-3/4	D	AL	AL	TP	-	AL	11	11	3A	1	(1)(2)(3)(4)(7)
	2	3070	1-3/4	E	HM	MP	TP	-	HM	2	2	3B	5	(1)(2)(3)(4)(7)
	3	6070	1-3/4	EE	HM	MP	TP	-	HM	2	2	3B	6	(1)(2)(3)(4)(7)
	4	3070	1-3/4	B	HM	MP	TP	-	HM	14/A6.2	14/A6.2	3B	5	(1)(2)(3)(4)(7)
	5	3070	1-3/4	A	HM	MP	TP	-	HM	14/A6.2	14/A6.2	3B	5	(1)(2)(7)
	6	140140	-	G	RF	MF	TP	-	RF	15	15	-	-	(11)
	7	140140	-	G	RF	MF	TP	-	RF	15	15	-	-	(11)
	8	140140	-	G	RF	MF	TP	-	RF	15	15	-	-	(11)
	9	3070	1-3/4	B	HM	MP	TP	-	HM	14/A6.2	14/A6.2	3B	9	(2)(3)(4)(7)
	10	4070	1-3/4	A	HM	MP	TP	-	HM	14/A6.2	14/A6.2	3B	16	(7)
	11	140140	-	G	RF	MF	TP	-	RF	15	15	-	-	(11)
	12	140140	-	G	RF	MF	TP	-	RF	15	15	-	-	(11)
	13	140140	-	G	RF	MF	TP	-	RF	15	15	-	-	(11)
	14	3070	1-3/4	E	SC	WD	TP	-	TMF	1	1	-	2	(3)(12)
	15	3070	1-3/4	A	SC	WD	-	-	TMF	1	1	-	3	(12)
	16	3070	1-3/4	E	SC	WD	TP	-	TMF	1	1	-	7	
	17	3070	1-3/4	A	SC	WD	-	-	TMF	1	1	-	4	
	18	3070	1-3/4	E	SC	WD	TP	-	TMF	1	1	-	7	(12)(15)
	19	3070	1-3/4	B	SC	WD	TP	-	TMF	1	1	-	7	(12)(3)
	20	3070	1-3/4	B	SC	WD	TP	-	TMF	1	1	-	7	(12)(3) △2
	21	3070	1-3/4	E	SC	WD	TP	-	TMF	1	1	-	7	
	22	3070	1-3/4	E	SC	WD	TP	-	TMF	1	1	-	7	
	23	3070	1-3/4	A	SC	WD	-	-	TMF	1	1	-	11	(5)
	24	3070	1-3/4	A	SC	WD	-	-	TMF	1	1	-	11	(5)
	25	3070	1-3/4	A	SC	WD	-	-	TMF	1	1	-	10	(6)(10)
	26	3070	1-3/4	A	SC	WD	-	-	TMF	1	1	-	11	(5)
	27	3070	1-3/4	A	SC	WD	-	-	TMF	1	1	-	11	(5)
	28	3070	1-3/4	A	SC	WD	-	-	TMF	1	1	-	11	(5)
	29	3070	1-3/4	A	SC	WD	-	-	TMF	1	1	-	11	(5)(3) △2
	30	3070	1-3/4	A	SC	WD	-	-	TMF	1	1	-	11	(5)
	31	3070	1-3/4	A	SC	WD	-	-	TMF	1	1	-	11	(5)
	32	3070	1-3/4	A	SC	WD	-	-	TMF	1	1	-	11	(5)
	33	3070	1-3/4	A	SC	WD	-	-	TMF	1	1	-	11	(5)
	34	3070	1-3/4	I	SC	WD	-	-	TMF	1	1	-	10	(6)(10)
	35	3070	1-3/4	I	SC	WD	-	-	TMF	1	1	-	10	(6)(10)
	36	3070	1-3/4	I	SC	WD	-	-	TMF	1	1	-	10	(6)(10)
	37	3070	1-3/4	I	SC	WD	-	-	TMF	1	1	-	10	(6)(10)
	38	3070	1-3/4	I	SC	WD	-	-	TMF	1	1	-	10	(6)(10)
	39	3070	1-3/4	E	SC	WD	TP	-	TMF	1	1	-	7	(12)
	40	3070	1-3/4	B	SC	WD	TP	-	TMF	1	1	-	13	
	41	3070	1-3/4	C	SC	WD	-	-	TMF	1	1	-	12	
	42	3070	1-3/4	C	SC	WD	-	-	TMF	1	1	-	8	
	43	3070	1-3/4	A	SC	WD	-	-	TMF	1	1	-	3	(12)
	44	3070	1-3/4	A	SC	WD	-	-	TMF	1	1	-	8	(12)
	45	3070	1-3/4	A	SC	WD	-	-	TMF	1	1	-	3	(12)
	46	3070	1-3/4	I	SC	WD	-	-	TMF	1	1	-	10	(8)(10)
	47	3070	1-3/4	B	HM	MP	TP	-	HM	5	5	3B	15	(5)
	48	3070	1-3/4	B	HM	MP	TP	-	HM	5	5	3B	15	(5)
	49	3670	1-3/4	C	HM	MP	-	-	HM	5	5	-	9	
	50	3670	1-3/4	C	HM	MP	-	-	HM	5	5	-	9	
	51	3070	1-3/4	A	HM	MP	-	-	HM	5	5	-	9	
	52	3070	1-3/4	B	HM	MP	TP	-	HM	5	5	-	14	
	53	3070	1-3/4	B	HM	MP	TP	-	HM	5	2	-	14	
	54	3070	1-3/4	I	HM	MP	TP	-	HM	5	5	-	10	(6)(10)
	55	3070	1-3/4	B	HM	MP	TP	-	HM	5	5	-	9	
STOR. BLDG.	56	6070	1-3/4	A	HM	MP	TP	-	HM	2	2	3B	6	(7)
	57	10080	-	H	RF	MF	-	-	RF	15	15	-	-	(11)
	58	3070	1-3/4	A	HM	MP	TP	-	HM	2	2	3B	16	(7)
GATES	59	4060	-	F	MG	PC	-	-	MG	-	-	-	17B	(13)
	60	4060	-	F	MG	PC	-	-	MG	-	-	-	17B	(13)
	61	3068	-	F	MG	PC	-	-	MG	-	-	-	17A	(13)
	62	25060	-	-	MG	PC	-	-	MG	-	-	-	-	(14)

(X) DOOR MARK PER REFERENCE PLAN, A2.2A

NOTES

- ALL DOORS TO HAVE THE BOTTOM OF 10" OF SMOOTH, UNINTERRUPTED SURFACE OR SHALL BE PROVIDED WITH A 10" HIGH SMOOTH METAL PANEL AT THE BOTTOM OF THE DOOR.
- ALL EXITS TO BE OPENABLE FROM THE INSIDE WITHOUT THE USE OF A KEY OR ANY SPECIAL KNOWLEDGE OR EFFORT.
- <u>11B-309.4 - OPERATION:</u> OPERABLE PARTS SHALL BE OPERABLE WITH ONE HAND AND SHALL NOT REQUIRE TIGHT GRASPING, PINCHING, OR TWISTING OF THE WRIST. THE FORCE REQUIRED TO ACTIVATE OPERABLE PARTS SHALL BE 5 POUNDS MAXIMUM.
- <u>11B-404.2.7 - DOOR AND GATE HARDWARE:</u> OPERABLE PARTS OF SUCH HARDWARE SHALL BE 34 INCHES AND 44 INCHES MAXIMUM ABOVE THE FINISH FLOOR OR GROUND. WHERE SLIDING DOORS ARE IN FULLY OPEN POSITION, OPERATING HARDWARE SHALL BE EXPOSED AND USABLE FROM BOTH SIDES.

MATL/GLAZING KEY

AL	ALUMINUM
HM	HOLLOW METAL
MG	METAL GATE
RF	ROLL FORMED GALVANIZED STEEL
SC	SOLID CORE
TMF	TIMELY FRAME
TP	TEMPERED PLATE

FINISH KEY

AL	ALUMINUM
MF	MANUFACTURE'S FINISH
MP	METAL PAINTED
PC	POWDER COATED
WD	HARD WOOD (BIRCH)

REMARKS KEY

1. INSTALL SIGN ABOVE DOOR STATING "THIS DOOR TO REMAIN UNLOCKED WHEN THIS SPACE IS OCCUPIED". PROVIDE 1" HIGH LETTERS ON A CONTRASTING BACKGROUND.
2. W/ CLOSER.
3. PROVIDE EXIT SIGN - SEE 8/A2.4.
4. LOCK OR LATCH SHALL BE OPENABLE FROM THE INSIDE WITHOUT THE USE OF A KEY OR ANY SPECIAL KNOWLEDGE OR EFFORT.
5. PROVIDE DOOR FRAME WITH FIRE RATED SEAL.
6. PROVIDE ALL-GENDER RESTROOM SIGN - SEE 6/A2.4
7. PROVIDE WEATHER STRIPPING AT JAMBS.
8. PROVIDE CA T-24 COMPLYING ADA ALL GENDER RESTROOM SIGN - SEE 7/A2.4, SIM.
9. PROVIDE PANIC HARDWARE.
10. PROVIDE A 6" H x 24" W LOUVER @ 12" A.F.F.
11. PROVIDE A SAFETY EDGE AT DOOR BOTTOM.
12. UNDERCUT DOOR 1".
13. ORNAMENTAL PERSONNEL GATE - SEE 7/A1.3.
14. MOTORIZED ORNAMENTAL ROLLING GATE - SEE 5/A1.3.
15. PROVIDE 180 DEGREE DOOR HINGES.

DOOR TYPES:

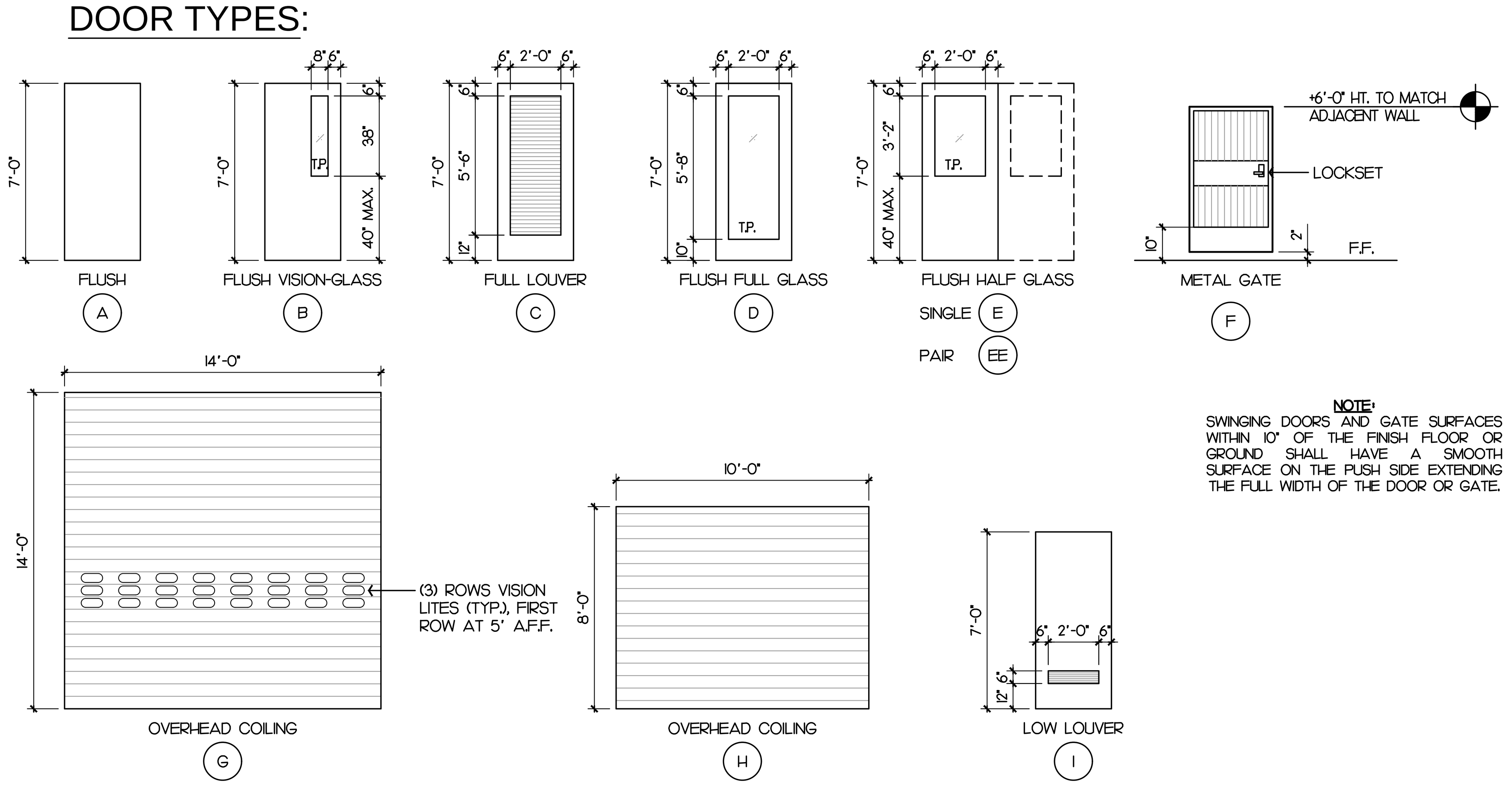

NOTE: SWINGING DOORS AND GATE SURFACES WITHIN 10" OF THE FINISH FLOOR OR GROUND SHALL HAVE A SMOOTH SURFACE ON THE PUSH SIDE EXTENDING THE FULL WIDTH OF THE DOOR OR GATE.

FINISH SCHEDULE

ROOM NAME	FLOOR MTL	FLOOR BASE	WALL A MTL	WALL A FIN	WALL B MTL	WALL B FIN	WALL C MTL	WALL C FIN	WALL D MTL	WALL D FIN	CEILING MTL	CEILING FIN	REMARKS
LOBBY	F1	B1	W1	A	W1	A	W1	A	W1	A	C1	A	
ADA RESTROOM	F1	B1	W1/W2	A/B	W1/W2	A/B	W1/W2	A/B	W1/W2	A/B	C1	A	WATER RESISTANT GYP. BD. FROM +4'-0" TO BOTTOM OF CEILING
HALLWAY #1	F1	B1	W1	A	W1	A	W1	A	W1	A	C2	C	
HALLWAY #2	F1	B1	W1	A	-	-	W1	A	-	-	C2	C	
HALLWAY #3	F1	B1	W1	A	W1	A	W1	A	-	-	C2	C	
LINEN	F1	B1	W1	A	W1	A	W1	A	W1	A	C2	C	
BATH #1	F1	B1	W1/W2	B/D	W1/W2	B/D	W1/W2	B/D	W1/W2	B/D	C1	A	WATER RESISTANT GYP. BD. FROM +4'-0" TO BOTTOM OF CEILING
BATH #2	F1	B1	W1/W2	B/D	W1/W2	B/D	W1/W2	B/D	W1/W2	B/D	C1	A	WATER RESISTANT GYP. BD. FROM +4'-0" TO BOTTOM OF CEILING
BATH #3	F1	B1	W1/W2	B/D	W1/W2	B/D	W1/W2	B/D	W1/W2	B/D	C1	A	WATER RESISTANT GYP. BD. FROM +4'-0" TO BOTTOM OF CEILING
BATH #4	F1	B1	W1/W2	B/D	W1/W2	B/D	W1/W2	B/D	W1/W2	B/D	C1	A	WATER RESISTANT GYP. BD. FROM +4'-0" TO BOTTOM OF CEILING
BATH #5	F1	B1	W1/W2	B/D	W1/W2	B/D	W1/W2	B/D	W1/W2	B/D	C1	A	WATER RESISTANT GYP. BD. FROM +4'-0" TO BOTTOM OF CEILING
OFFICE #1	F1	B1	W1	A	W1	A	W1	A	W1	A	C2	C	
OFFICE #2	F1	B1	W1	A	W1	A	W1	A	W1	A	C2	C	
OFFICE #3	F1	B1	W1	A	W1	A	W1	A	W1	A	C2	C	
KITCHEN	F1	B1	W1/W2	B/D	W1/W2	B/D	W1/W2	B/D	W1/W2	B/D	C1	A	
PANTRY	F1	B1	W1	A	W1	A	W1	A	W1	A	C1	A	
DINING	F1	B1	W1	A	W1	A	W1	A	W1	A	C2	C	
DAYROOM	F1	B1	W1	A	W1	A	W1	A	W1	A	C2	C	
EXERCISE	F2	B1	W1	A	W1	A	W1	A	W1	A	C2	C	
SLEEP QUARTERS #1	F1	B1	W1	A	W1	A	W1	A	W1	A	C1	A	
SLEEP QUARTERS #2	F1	B1	W1	A	W1	A	W1	A	W1	A	C1	A	
SLEEP QUARTERS #3	F1	B1	W1	A	W1	A	W1	A	W1	A	C1	A	
SLEEP QUARTERS #4	F1	B1	W1	A	W1	A	W1	A	W1	A	C1	A	
SLEEP QUARTERS #5	F1	B1	W1	A	W1	A	W1	A	W1	A	C1	A	
SLEEP QUARTERS #6	F1	B1	W1	A	W1	A	W1	A	W1	A	C1	A	
SLEEP QUARTERS #7	F1	B1	W1	A	W1	A	W1	A	W1	A	C1	A	
SLEEP QUARTERS #8	F1	B1	W1	A	W1	A	W1	A	W1	A	C1	A	
SLEEP QUARTERS #9	F1	B1	W1	A	W1	A	W1	A	W1	A	C1	A	
BC'S QUARTERS	F1	B1	W1	A	W1	A	W1	A	W1	A	C1	A	
BC'S BATH	F1	B1	W1/W2	B/D	W1/W2	B/D	W1/W2	B/D	W1/W2	B/D	C1	A	WATER RESISTANT GYP. BD. FROM +4'-0" TO BOTTOM OF CEILING
COMM. ROOM	F3	B1	W1	A	W1	A	W1	A	W1	A	C1	A	FIRE RESISTANT PLYWOOD FROM FLOOR TO CEILING - ALL WALLS
MECHANICAL	F3	B1	W1	A	W1	A	W1	A	W1	A	C1	A	
MEDIC STORAGE	F1	B1	W1	A	W1	A	W1	A	W1	A	C1	A	
LAUNDRY	F1	B1	W1	A	W1	A	W1	A	W1	A	C1	A	WATER RESISTANT GYP. BD. FROM FLOOR TO CEILING: WALLS B & C ONLY
FIRE SPRINKLER RISER	F3	B1	W1	A	W1	A	W1	A	W1	A	C3	A	
JANITOR	F3	B1	W1	A	W1	A	W1	A	W1	A	C3	A	
ICE	F3	B1	W1	A	W1	A	W1	A	W1	A	C3	A	
APPARATUS	F3	B2	W1/W3	A/C	W1/W3	A/C	W1/W3	A/C	W1/W3	A/C	C3	A	
TURNOUT GEAR	F3	B1	W1	A	W1	A	W1	A	W1	A	C3	A	
UTILITY / DECON	F3	B1	W3	C	W3	C	W3	C	W3	C	C3	A	WATER RESISTANT GYP. BD. FROM +4'-0" TO BOTTOM OF CEILING
ELECTRICAL	F3	B1	W1	A	W1	A	W1	A	W1	A	C3	A	
RESTROOM	F3	B1	W1/W2	B/D	W1/W2	B/D	W1/W2	B/D	W1/W2	B/D	C3	A	
VESTIBULE	F3	B1	W1	A	W1	A	W1	A	W1	A	C3	A	
PATIO	F3	-	W4	-	W4	-	W5	C	W5	C	C4	-	
MAIN ENTRY	F3	-	W4/W5	-	W5	C	W5	C	W5	C	C4	-	
BC'S ENTRY	F3	-	W4	-	W4	-	W6	C	W6	C	C4	-	

MATERIAL KEY

FLOOR

F1	POLISHED CONCRETE
F2	RESILIENT ATHLETIC FLOORING
F3	EXPOSED CONCRETE, MEDIUM BROOM

BASE

B1	TOP SET BASE
B2	6" CONC. BASE W/ SEALER

WALL

W1	GYPSUM BOARD, 5/8" TYPE X "MOLD RESISTANT" AND TEXTURED (MEDIUM ORANGE PEEL (PROVIDE WATER RESISTIVE TYPE BEHIND WET AREAS)
W2	CERAMIC TILE OVER CEMENT BOARD
W3	SANITARY WALL PANEL
W4	CEMENT PLASTER W/ ELASTOMERIC PAINT
W5	MANUFACTURED STONE VENEER
W6	FIBER CEMENT SIDING - PAINT

CEILING

C1	5/8" TYPE X GYPSUM BOARD, TAPED AND TEXTURED w/ MEDIUM ORANGE PEEL FINISH (PROVIDE MOISTURE RESISTIVE TYPE IN WET AREAS).
C2	ACOUSTICAL T-BAR CEILING & GRID SYSTEM.
C3	EXPOSED STRUCTURE - PAINT.
C4	CEMENT PLASTER W/ ELASTOMERIC PAINT

GENERAL NOTES

1. WALL AND CEILING MATERIALS SHALL NOT EXCEED THE FLAME SPREAD CLASSIFICATION IN CBC TABLE 803.13.

FINISH KEY

A	PAINT, EGGSHELL
B	CERAMIC TILE
C	MANUFACTURER'S FINISH (CLEAN)
D	PAINT, SEMI-GLOSS

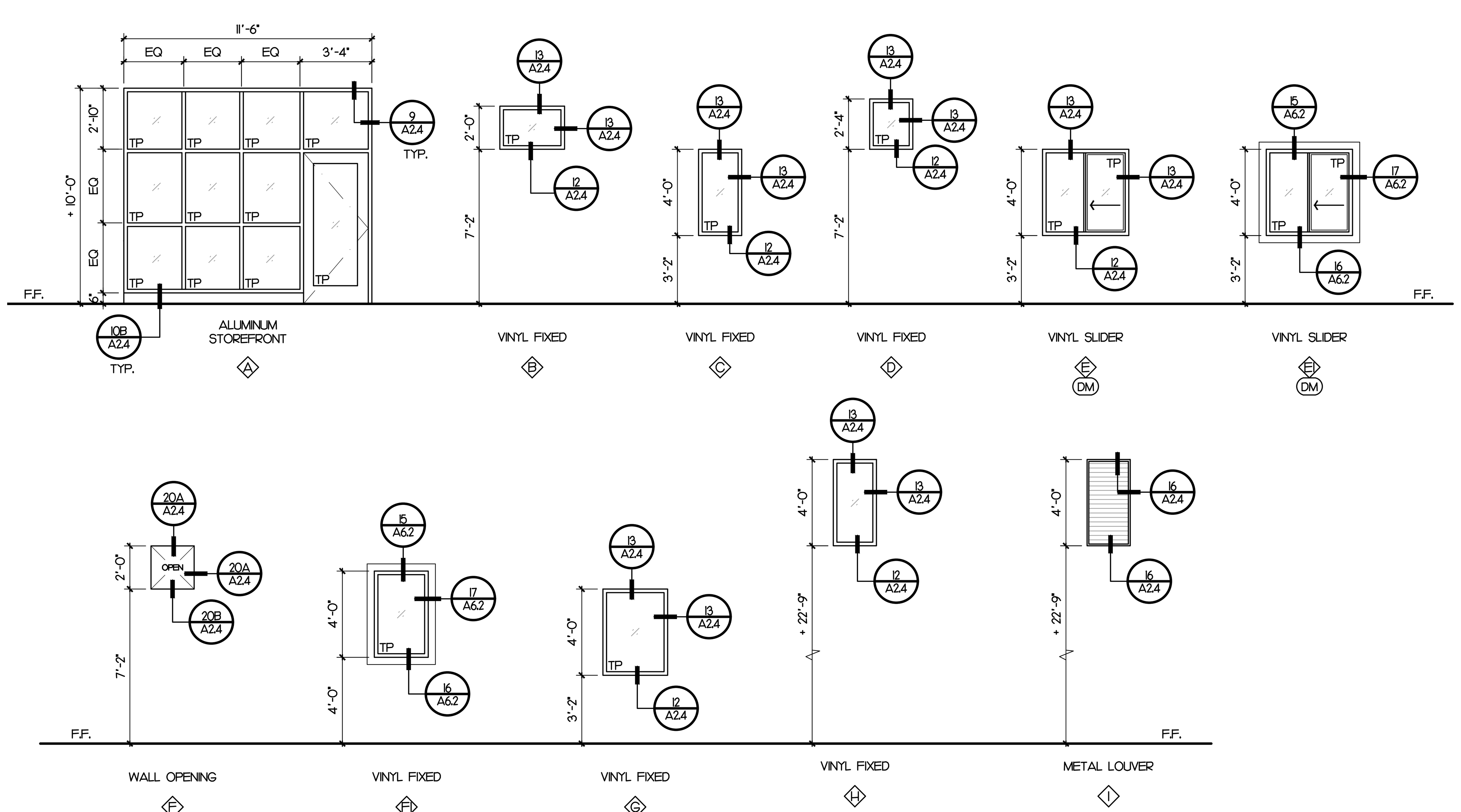

WINDOW LEGEND

◇ = WINDOW TYPES PER REFERENCE PLAN, SHEET A2.2A

T.P. = TEMPERED PLATE

WINDOW NOTES

- ALL EXTERIOR WINDOWS TO HAVE DUAL GLAZED. FIELD MEASURE ALL ROUGH OPENINGS PRIOR TO FABRICATION / INSTALLATION.
- ALL WINDOWS SIZES SHOWN ARE NOMINAL. SEE MANUFACTURER INFORMATION FOR ROUGH OPENING SIZES.
- ALL WINDOWS TO HAVE MAX. U-FACTOR OF .29 AND A MIN. VT OF .50.
- TEMPERED GLASS TO DISPLAY LABEL PER CBC 2406

WINDOW BLINDS LEGEND

(DM) DUAL MANUAL

(SM) SINGLE MANUAL

WINDOW SCHEDULE

SCALE: 1/4"=1'-0" 4

STK ARCHITECTURE, INC.
42095 ZEVO DR., TEMECULA, CALIFORNIA 92590-3780
Phone: 951.296.9110 Fax: 951.296.6079 Email: stk@stkinc.com

CONSULTANT:

REVIEWED FOR CODE COMPLIANCE
THESE PLANS AND DOCUMENTS HAVE BEEN REVIEWED AND FOUND TO BE IN COMPLIANCE WITH THE APPLICABLE CODE REQUIREMENTS OF THE JURISDICTION. ISSUANCE OF A PERMIT IS RECOMMENDED, SUBJECT TO APPROVAL BY OTHER DEPARTMENTS AND ANY NOTED CONDITIONS. THE STAMPING OF THESE PLANS SHALL NOT BE HELD TO PERMIT OR BE AN APPROVAL OF ANY VIOLATION OF APPLICABLE CODES AND STANDARDS, NOR RELIEVE THE OWNER, DESIGN PROFESSIONAL OF RECORD, OR CONTRACTOR OF COMPLIANCE WITH THE APPLICABLE CODES AND STANDARDS. PLAN REVIEW OF DOCUMENTS DOES NOT AUTHORIZE CONSTRUCTION TO PROCEED IN VIOLATION OF ANY FEDERAL, STATE, OR LOCAL REGULATION.
BUILDING BUREAU SOLUTIONS, INC.
REVIEWED BY: STEVE KIM, PE, CASp
THIS SET OF THE PLANS AND SPECIFICATIONS MUST BE KEPT ON THE JOB SITE AT ALL TIMES AND IT IS UNLAWFUL TO MAKE ANY CHANGES OR ALTERATIONS WITHOUT PERMISSION FROM THE CITY. OCCUPANCY OF STRUCTURE(S) IS NOT PERMITTED UNTIL FINAL APPROVAL IS GRANTED BY ALL APPLICABLE DEPARTMENTS.
BBS BUILDING BUREAU SOLUTIONS INC.

PROJECT ADMINISTERED BY:

CITY OF PERRIS

101 NORTH "D" STREET
PERRIS, CA 92570

PROJECT NAME:

FIRE STATION 105 AND ADMINISTRATION BUILDING

PROJECT CIP: F077

2495 MURRIETA ROAD
PERRIS, CA 92585

ISSUE INFORMATION:

DATE:	INFORMATION:
11-26-25	95% CD SUBMITTAL
02-05-26	△1 1st PC RESPONSE
02-19-26	△2 2nd PC RESPONSE

SHEET INFORMATION:

STK PROJECT NO.: 365-03-25
SCALE: AS NOTED
DATE: NOVEMBER 2025
PLOT DATE: –
DRAWN BY: JN

SEAL:

LICENSED ARCHITECT ANTONIO FINALDI No. C31476 REN. 07-31-27 STATE OF CALIFORNIA

SHEET TITLE:

SCHEDULES - FIRE STATION

SHEET NO.:

A2.3A

DOOR SCHEDULE

	DOOR							FIRE RATING LABEL (MIN)	FRAME				HARDWARE	
		SIZE								DETAIL, SHEET A2.4			GROUP (SEE SPEC'S)	
	MARK	WD-HT	THK	TYPE	MATL	FIN	GLAZING		MATL	HEAD	JAMB	SILL		REMARKS
ADMIN BUILDING	65	3070	1-3/4	D	AL	AL	TP	-	AL	11	11	3A	18	(1)(2)(3)(4)(5)(7)(9)(11)
	66	3070	1-3/4	A	HM	MP	-	-	HM	2	2	3B	26	(7)
	67	3070	1-3/4	B	HM	MP	TP	-	HM	14/A6.2	14/A6.2	3B	22 △2	(2)(3)(4)(5)(7)(9)
	68	3070	1-3/4	E	HM	MP	TP	-	HM	2	2	3B	22 △2	(2)(3)(4)(5)(7)(9)
	69	3070	1-3/4	B	HM	MP	TP	-	HM	14/A6.2	14/A6.2	3B	22 △2	(2)(3)(4)(5)(7)(9)
	70	4070	1-3/4	C	HM	MP	-	-	HM	14/A6.2	14/A6.2	3B	26	(7)
	71	3070	1-3/4	G	SC	WD	-	-	TMF	1	1	18	24	(8)(10)
	72	3070	1-3/4	B	SC	WD	TP	-	TMF	1	1	18	19	(3)(9)(12)
	73	3070	1-3/4	B	SC	WD	TP	-	TMF	1	1	18	19	(3)(9)(12)
	74	3070	1-3/4	E	SC	WD	TP	-	TMF	1	1	18	21	△2
	75	3070	1-3/4	A	SC	WD	-	-	TMF	1	1	18	23	
	76	3070	1-3/4	G	SC	WD	-	-	TMF	1	1	18	24	(8)(10)
	77	3070	1-3/4	G	SC	WD	-	-	TMF	1	1	18	24	(8)(10)
	78	3070	1-3/4	A	SC	WD	-	-	TMF	1	1	18	20	(12)
	79	3070	1-3/4	A	SC	WD	-	-	TMF	1	1	18	20	(12)
	80	3070	1-3/4	A	SC	WD	-	-	TMF	1	1	18	20	(12)
	81	3070	1-3/4	A	SC	WD	-	-	TMF	1	1	18	20	(12)
	82	3070	1-3/4	B	SC	WD	-	-	TMF	1	1	18	20	(12) △2
	83	3070	1-3/4	A	SC	WD	-	-	TMF	1	1	18	20	(12)
	84	3070	1-3/4	A	SC	WD	-	-	TMF	1	1	18	20	(12)
	85	3070	1-3/4	A	SC	WD	-	-	TMF	1	1	18	20	(12)
	86	3070	1-3/4	C	SC	WD	-	-	TMF	1	1	18	25	
	87	3070	1-3/4	C	SC	WD	-	-	TMF	1	1	18	23	
	88	3070	1-3/4	E	SC	WD	-	-	TMF	1	1	18	19	(3)(5)(9)
	89	3070	1-3/4	A	SC	WD	-	-	TMF	1	1	18	23	
	90	3070	1-3/4	A	SC	WD	-	-	TMF	1	1	18	21	
STOR BLDG	91	6070	1-3/4	A	HM	MP	-	-	HM	2	2	3B	27	(7)
GATES	92	3060	-	F	MG	PC	-	-	MG	-	-	-	28	(13)
	93	3060	-	F	MG	PC	-	-	MG	-	-	-	28	(13)
	94	20060	-	-	MG	PC	-	-	MG	-	-	-	-	(14)

(X) DOOR MARK PER REFERENCE PLAN, A2.2B

NOTES

- ALL DOORS TO HAVE THE BOTTOM OF 10" OF SMOOTH, UNINTERRUPTED SURFACE OR SHALL BE PROVIDED WITH A 10" HIGH SMOOTH METAL PANEL AT THE BOTTOM OF THE DOOR.
- ALL EXITS TO BE OPENABLE FROM THE INSIDE WITHOUT THE USE OF A KEY OR ANY SPECIAL KNOWLEDGE OR EFFORT.
- <u>11B-309.4 - OPERATION:</u> OPERABLE PARTS SHALL BE OPERABLE WITH ONE HAND AND SHALL NOT REQUIRE TIGHT GRASPING, PINCHING, OR TWISTING OF THE WRIST. THE FORCE REQUIRED TO ACTIVATE OPERABLE PARTS SHALL BE 5 POUNDS MAXIMUM.
- <u>11B-404.2.7 - DOOR AND GATE HARDWARE:</u> OPERABLE PARTS OF SUCH HARDWARE SHALL BE 34 INCHES AND 44 INCHES MAXIMUM ABOVE THE FINISH FLOOR OR GROUND. WHERE SLIDING DOORS ARE IN FULLY OPEN POSITION, OPERATING HARDWARE SHALL BE EXPOSED AND USABLE FROM BOTH SIDES.

MATL/GLAZING KEY

AL	ALUMINUM
HM	HOLLOW METAL
MG	METAL GATE
RF	ROLL FORMED GALVANIZED STEEL
SC	SOLID CORE
TMF	TIMELY FRAME
TP	TEMPERED PLATE

FINISH KEY

AL	ALUMINUM
MF	MANUFACTURE'S FINISH
MP	METAL PAINTED
PC	POWDER COATED
WD	HARD WOOD (BIRCH)

REMARKS KEY

1. INSTALL SIGN ABOVE DOOR STATING "THIS DOOR TO REMAIN UNLOCKED WHEN THIS SPACE IS OCCUPIED". PROVIDE 1" HIGH LETTERS ON A CONTRASTING BACKGROUND.
2. W/ CLOSER.
3. PROVIDE EXIT SIGN - SEE 8/A2.4.
4. LOCK OR LATCH SHALL BE OPENABLE FROM THE INSIDE WITHOUT THE USE OF A KEY OR ANY SPECIAL KNOWLEDGE OR EFFORT.
5. PROVIDE POWER FOR KEY/CARD READER.
6. FIELD VERIFY SIZE.
7. PROVIDE WEATHER STRIPPING AT JAMBS.
8. PROVIDE CA T-24 COMPLYING ADA ALL GENDER RESTROOM SIGN - SEE 7/A2.4, SIM.
9. PROVIDE PANIC HARDWARE.
10. PROVIDE A 6" H x 24" W LOUVER @ 12" A.F.F.
11. PROVIDE POWER ASSIST.
12. UNDERCUT DOOR 1".
13. ORNAMENTAL PERSONNEL GATE - SEE 7/A1.3.
14. MOTORIZED ORNAMENTAL ROLLING GATE - SEE 9/A1.4.

DOOR TYPES:

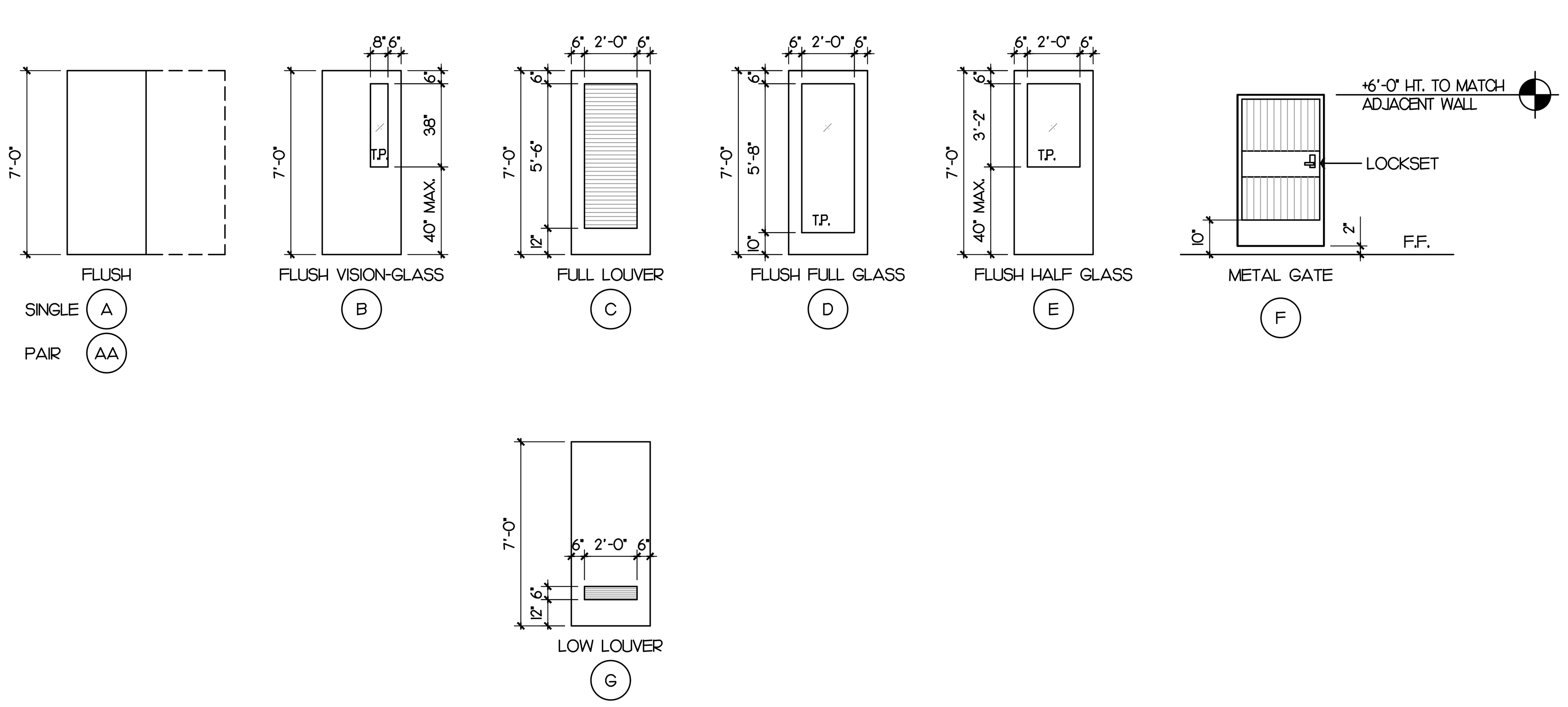

FINISH SCHEDULE

ROOM NAME	FLOOR MTL	FLOOR BASE	WALL A MTL	WALL A FIN	WALL B MTL	WALL B FIN	WALL C MTL	WALL C FIN	WALL D MTL	WALL D FIN	CEILING MTL	CEILING FIN	REMARKS
LOBBY	F3	B2	W1	A	W1	A	W1	A	W1	A	C2	C	
PUBLIC RESTROOM	F1	B1	W1/W2	A/B	W1/W2	A/B	W1/W2	A/B	W1/W2	A/B	C1	A	WATER RESISTANT GYP. BD. FROM +4'-0" TO BOTTOM OF CEILING
MEN	F1	B1	W1/W2	A/B	W1/W2	A/B	W1/W2	A/B	W1/W2	A/B	C1	A	WATER RESISTANT GYP. BD. FROM +4'-0" TO BOTTOM OF CEILING
WOMEN	F1	B1	W1/W2	A/B	W1/W2	A/B	W1/W2	A/B	W1/W2	A/B	C1	A	WATER RESISTANT GYP. BD. FROM +4'-0" TO BOTTOM OF CEILING
RECEPTION	F3	B2	W1	A	W1	A	W1	A	W1	A	C2	C	
HALLWAY #1	F3	B2	W1	A	W1	A	W1	A	W1	A	C2	C	
HALLWAY #2	F3	B2	-	-	W1	A	-	-	W1	A	C2	C	
HALLWAY #3	F3	B2	W1	A	W1	A	-	-	W1	A	C2	C	
OPEN OFFICE	F2	B2	W1	A	W1	A	W1	A	W1	A	C2	C	
OFFICE 1	F2	B2	W1	A	W1	A	W1	A	W1	A	C2	C	
OFFICE 2	F2	B2	W1	A	W1	A	W1	A	W1	A	C2	C	
OFFICE 3	F2	B2	W1	A	W1	A	W1	A	W1	A	C2	C	
OFFICE 4	F2	B2	W1	A	W1	A	W1	A	W1	A	C2	C	
OFFICE 5	F2	B2	W1	A	W1	A	W1	A	W1	A	C2	C	
OFFICE 6	F2	B2	W1	A	W1	A	W1	A	W1	A	C2	C	
OFFICE 7	F2	B2	W1	A	W1	A	W1	A	W1	A	C2	C	
CONFERENCE ROOM	F2	B2	W1	A	W1	A	W1	A	W1	A	C2	C	
TRAINING ROOM	F2	B2	W1	A	W1	A	W1	A	W1	A	C2	C	
BREAK	F3	B2	W1	A	W1	A	W1	A	W1	A	C1	A	
STOR./PANTRY	F3	B2	W1	A	W1	A	W1	A	W1	A	C1	A	
JANITOR	F5	B2	W1	A	W1	A	W1	A	W1	A	C1	A	
COMMUNICATION	F5	B2	W1	A	W1	A	W1	A	W1	A	C1	A	
MECHANICAL	F5	B2	W1	A	W1	A	W1	A	W1	A	C1	A	
STORAGE	F5	B2	W1	A	W1	A	W1	A	W1	A	C1	A	
ELECTRICAL	F4	B2	W1	A	W1	A	W1	A	W1	A	C3	-	
FSR	F4	-	W4	-	W4	-	W4	-	W4	-	C3	-	

MATERIAL KEY

FLOOR

F1	CERAMIC TILE OVER FULL MORTAR BED
F2	CARPET TILE
F3	RESILIENT TILE FLOORING
F4	EXPOSED CONCRETE, MEDIUM BROOM
F5	EXPOSED CONCRETE, SMOOTH TROWEL FINISH

BASE

B1	CERAMIC TILE, COVED
B2	TOP SET BASE

WALL

W1	GYPSUM BOARD, 5/8" TYPE X "MOLD RESISTANT" AND TEXTURED (MEDIUM ORANGE PEEL (PROVIDE WATER RESISTIVE TYPE BEHIND WET AREAS)
W2	CERAMIC TILE OVER CEMENT BOARD
W3	CEMENT PLASTER W/ ELASTOMERIC PAINT
W4	EXPOSED STRUCTURE/FRAMING

CEILING

C1	5/8" TYPE X GYPSUM BOARD, TAPED AND TEXTURED w/ MEDIUM ORANGE PEEL FINISH (PROVIDE MOISTURE RESISTIVE TYPE IN WET AREAS).
C2	ACOUSTICAL T-BAR CEILING & GRID SYSTEM.
C3	EXPOSED STRUCTURE - PAINT.

FINISH KEY

A	PAINT, EGGSHELL
B	CERAMIC TILE
C	MANUFACTURER'S FINISH (CLEAN)

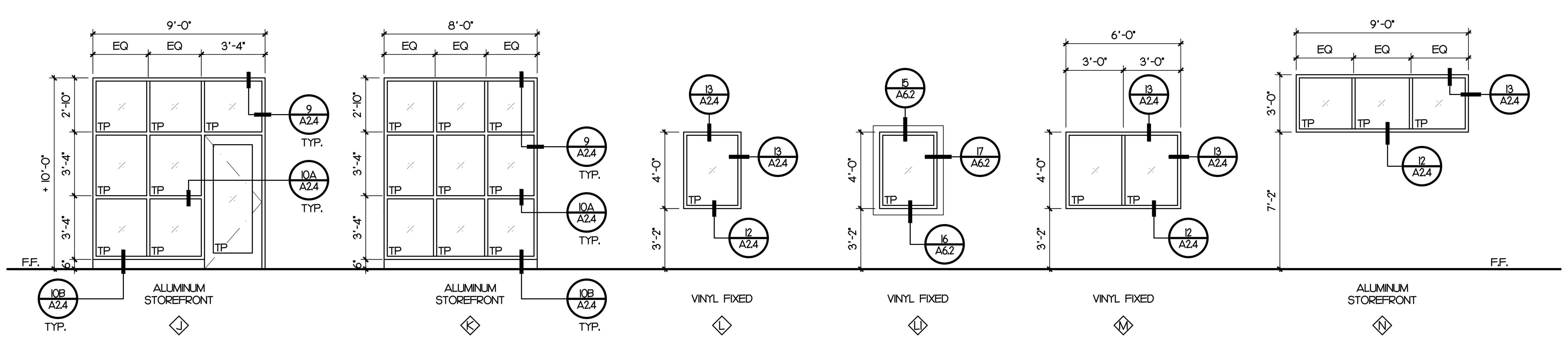

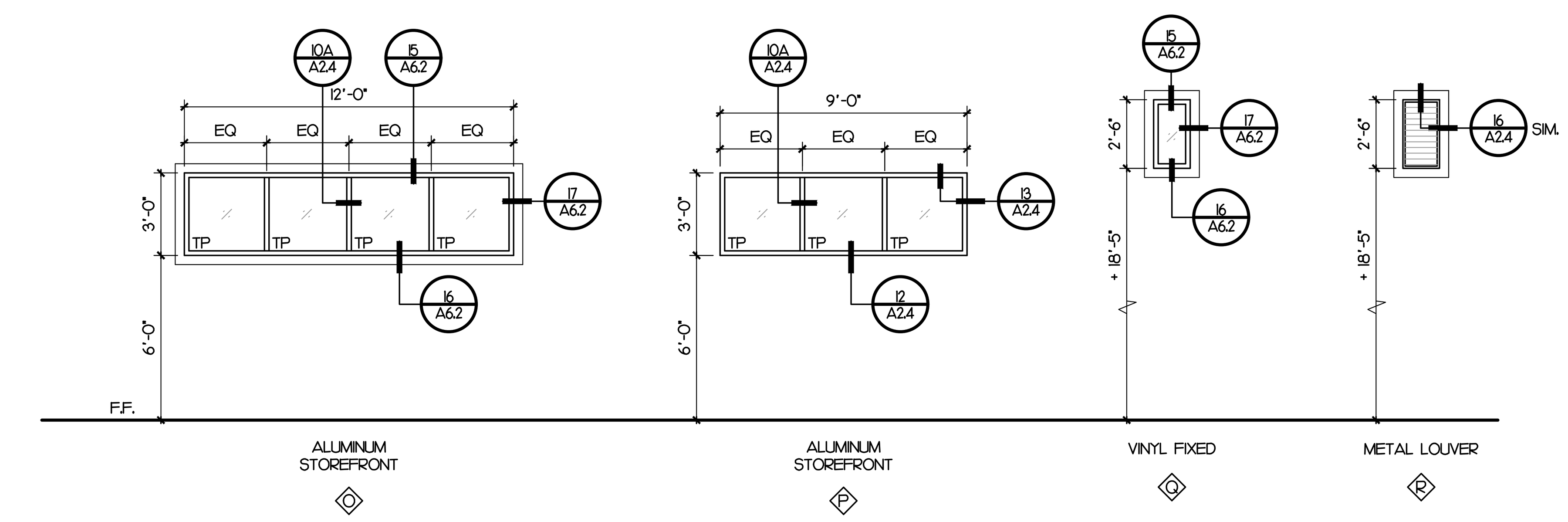

WINDOW LEGEND
◇ = WINDOW TYPES PER REFERENCE PLAN, SHEET A2.2
TP = TEMPERED PLATE

WINDOW NOTES

- ALL EXTERIOR WINDOWS DUAL GLAZED. FIELD MEASURE ALL ROUGH OPENINGS PRIOR TO FABRICATION / INSTALLATION.
- ALL WINDOWS SIZES SHOWN ARE NOMINAL SIZE. SEE MFR. INFORMATION FOR ROUGH OPENING SIZES.
- WINDOWS TO HAVE MAX. U-FACTOR OF .29 AND A MIN. VT OF .50.

WINDOW SCHEDULE — SCALE: 1/4"=1'-0" — 4

STK ARCHITECTURE, INC.
42095 ZEVO DR., TEMECULA, CALIFORNIA 92590-3780
Phone: 951.296.9110 Fax: 951.296.6079 Email: stk@stkinc.com

CONSULTANT:

REVIEWED FOR CODE COMPLIANCE
THESE PLANS AND DOCUMENTS HAVE BEEN REVIEWED AND FOUND TO BE IN COMPLIANCE WITH THE APPLICABLE CODE REQUIREMENTS OF THE JURISDICTION. ISSUANCE OF A PERMIT IS RECOMMENDED, SUBJECT TO APPROVAL BY OTHER DEPARTMENTS AND ANY NOTED CONDITIONS. THE STAMPING OF THESE PLANS SHALL NOT BE HELD TO PERMIT OR BE AN APPROVAL OF ANY VIOLATION OF APPLICABLE CODES AND STANDARDS, NOR RELIEVE THE OWNER, DESIGN PROFESSIONAL OF RECORD, OR CONTRACTOR OF COMPLIANCE WITH THE APPLICABLE CODES AND STANDARDS. PLAN REVIEW OF DOCUMENTS DOES NOT AUTHORIZE CONSTRUCTION TO PROCEED IN VIOLATION OF ANY FEDERAL, STATE, OR LOCAL REGULATION.
BUILDING BUREAU SOLUTIONS, INC.
REVIEWED BY: STEVE KIM, PE, CASp
THIS SET OF THE PLANS AND SPECIFICATIONS MUST BE KEPT ON THE JOB SITE AT ALL TIMES AND IT IS UNLAWFUL TO MAKE ANY CHANGES OR ALTERATIONS WITHOUT PERMISSION FROM THE CITY. OCCUPANCY OF STRUCTURE(S) IS NOT PERMITTED UNTIL FINAL APPROVAL IS GRANTED BY ALL APPLICABLE DEPARTMENTS.
BBS BUILDING BUREAU SOLUTIONS INC.

PROJECT ADMINISTERED BY:
CITY OF PERRIS
101 NORTH "D" STREET
PERRIS, CA 92570

PROJECT NAME:
FIRE STATION 105 AND ADMINISTRATION BUILDING

PROJECT CIP: F077

2495 MURRIETA ROAD
PERRIS, CA 92585

ISSUE INFORMATION:

DATE:	INFORMATION:
11-26-25	95% CD SUBMITTAL
02-05-26	△1 1st PC RESPONSE
02-19-26	△2 2nd PC RESPONSE
02-22-26	△3 3rd PC RESPONSE
04-27-26	△4 4th PC RESPONSE

SHEET INFORMATION:

STK PROJECT NO.: 365-03-25
SCALE: AS NOTED
DATE: NOVEMBER 2025
PLOT DATE: –
DRAWN BY: JN

SEAL: LICENSED ARCHITECT ANTONIO FINALDI No. C31476 REN. 07-31-27 STATE OF CALIFORNIA

SHEET TITLE:
SCHEDULES - ADMIN. BLDG.
(ADD. ALT. #1)

SHEET NO.:
A2.3B

05/04/2026 2:10PM J:\365-City of Perris\365-03-25 South Perris Fire Station\Architectural\A2.3B - ADMIN BLDG SCHEDULES.dwg

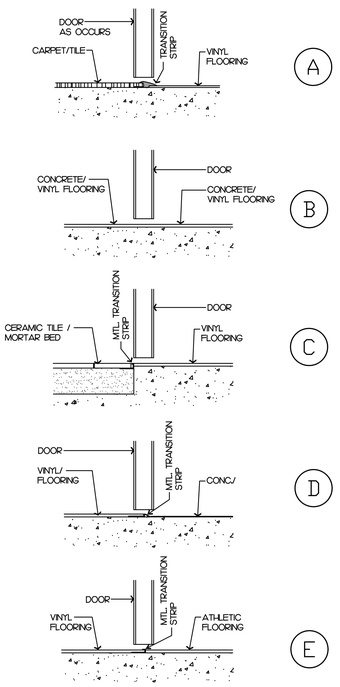

DOOR SILL — SCALE: 3"=1'-0" — 18

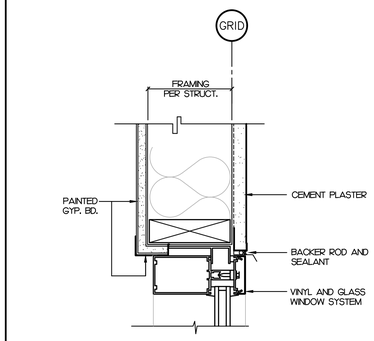

WINDOW HEAD / JAMB — SCALE: 3"=1'-0" — 13

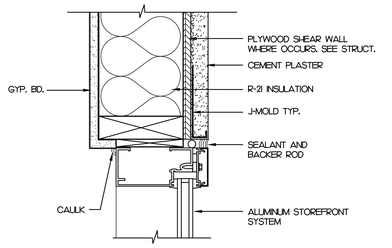

STOREFRONT HEAD/JAMB — SCALE: 3"=1'-0" — 9

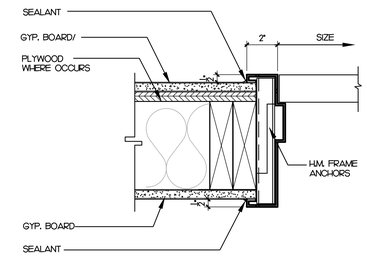

INT. DOOR HEAD/JAMB - SIM. — SCALE: 3"=1'-0" — 5

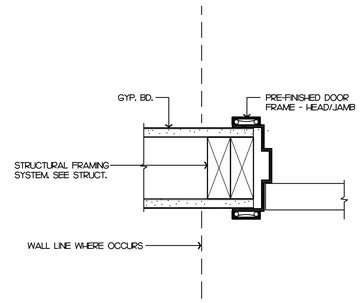

INT. DOOR HEAD / JAMB SIM. — SCALE: 3"=1'-0" — 1

OPENING W/ STONE VENEER — SCALE: 1-1/2"=1'-0" — 20

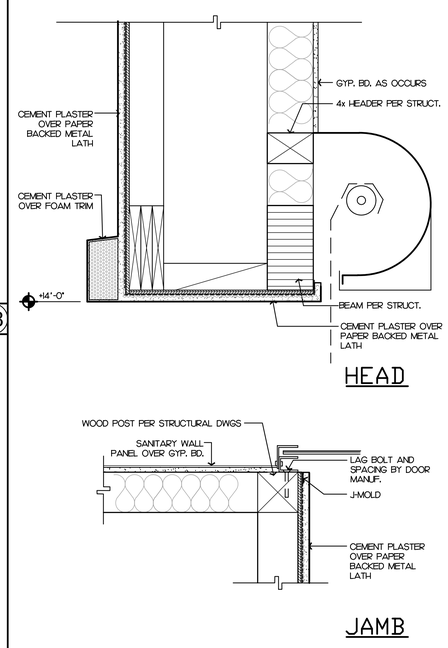

OH COILING DOOR HEAD/JAMB — SCALE: 1-1/2"=1'-0" — 15

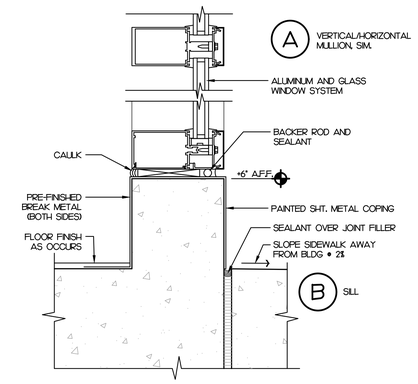

SILL & MULLION @ STOREFRONT — SCALE: 3"=1'-0" — 10

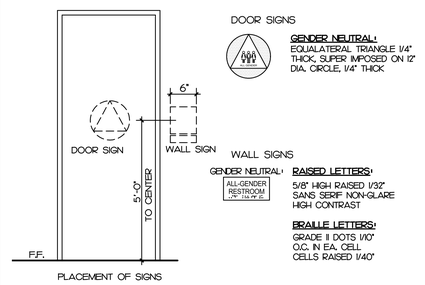

RESTROOM SIGNS — SCALE: 1/2"=1'-0" — 6

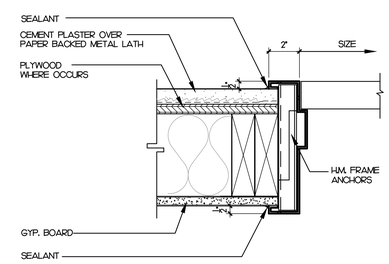

EXT. DOOR HEAD/JAMB - SIM. — SCALE: 3"=1'-0" — 2

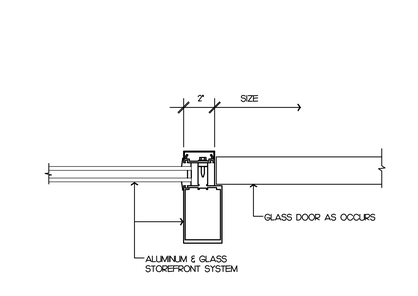

WINDOW SILL — SCALE: 3"=1'-0" — 12

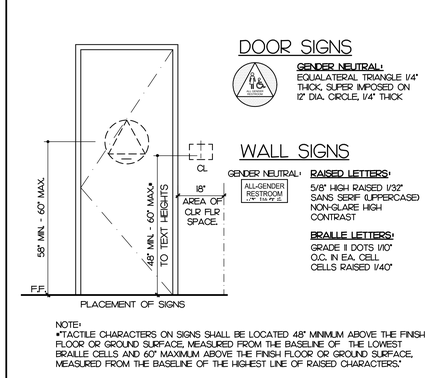

ADA RESTROOM SIGNS — SCALE: 1/2"=1'-0" — 7

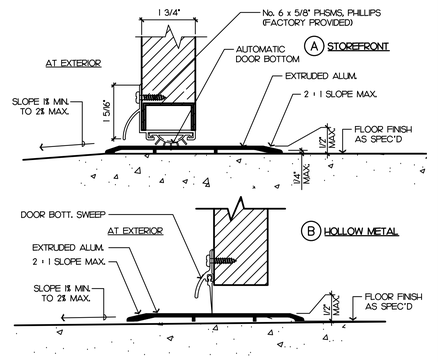

DOOR THRESHOLD — SCALE: 6"=1'-0" — 3

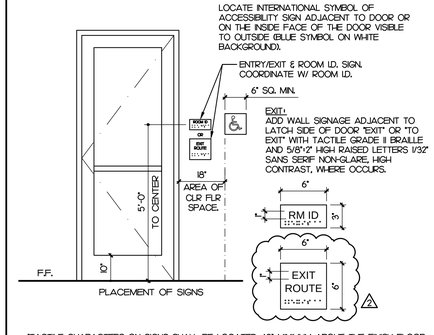

ENTRY / EXIT & RM. I.D. SIGNS — SCALE: 1/2"=1'-0" — 8

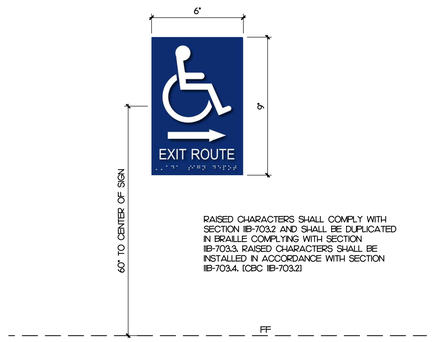

EXIT ROUTE SIGN — SCALE: N.T.S. — 4

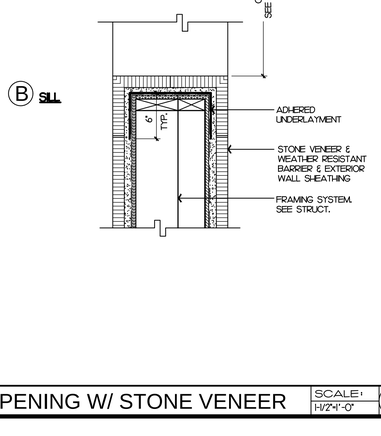

WALL LOUVER DETAIL — SCALE: N.T.S. — 16

STK
ARCHITECTURE INC.
42095 ZEVO DR., TEMECULA, CALIFORNIA 92590-3780
Phone: 951.296.9110 Fax: 951.296.6079 Email: stk@stkinc.com

CONSULTANT:

REVIEWED FOR CODE COMPLIANCE

THESE PLANS AND DOCUMENTS HAVE BEEN REVIEWED AND FOUND TO BE IN COMPLIANCE WITH THE CODES AND ORDINANCES IN EFFECT AT THE JURISDICTION. ISSUANCE OF A PERMIT DOES NOT IMPLY APPROVAL SUBJECT TO APPROVAL BY OTHER DEPARTMENTS AND ANY NOTED CONDITIONS. THE APPROVAL OF PLANS AND DOCUMENTS DOES NOT PERMIT THE VIOLATION OF APPROVAL OF ANY VIOLATIONS OF APPLICABLE CODES AND STANDARDS. NOR RELIEVE THE OWNER, DESIGN PROFESSIONAL OF RECORD, OR CONTRACTOR OF RESPONSIBILITY FOR COMPLIANCE. THE APPROVAL OF PLANS AND DOCUMENTS DOES NOT AUTHORIZE CONSTRUCTION TO BE EXECUTED IN VIOLATION OF ANY FEDERAL, STATE OR LOCAL REGULATIONS.
BUILDING BUREAU VOLUNTEER, INC.
REVIEWED BY: STEVEN M. PLOG
DATE:
THIS SET OF THE PLANS AND SPECIFICATIONS MUST BE KEPT ON THE JOB SITE AT ALL TIMES. IT IS UNLAWFUL TO MAKE ANY CHANGES OR ALTERATIONS ON THE PLANS WITHOUT AUTHORIZATION FROM THE BUILDING OFFICIAL. THIS APPROVAL IS GRANTED BY ALL APPLICABLE DEPARTMENTS.
ELECTRONIC PLAN CHECK SOLUTIONS INC.

PROJECT ADMINISTERED BY:
CITY OF PERRIS

101 NORTH "D" STREET
PERRIS, CA 92570

PROJECT NAME:
FIRE STATION 105 AND ADMINISTRATION BUILDING

PROJECT CIP: F077

2495 MURRIETA ROAD
PERRIS, CA 92585

ISSUE INFORMATION:

DATE:	INFORMATION:
11-26-25	95% CD SUBMITTAL
02-05-26	1 1st PC RESPONSE
02-19-26	2 2nd PC RESPONSE

SHEET INFORMATION:
STK PROJECT NO.: 365-03-25
SCALE: AS NOTED
DATE: NOVEMBER 2025
PLOT DATE: –
DRAWN BY: JN

SEAL:



SHEET TITLE:
DOOR & WINDOW DETAILS

SHEET NO.:
A2.4

J:\365-City of Perris\SD\10-25 Sixth Perris Fire Station\Architect\sub\A2.4 - DOOR & WINDOW DETAILS.dwg
04/14/2026 2:19PM

CEILING LEGEND

- EXIT SIGN
- 22" x 30" CEILING ACCESS PANEL
- SUSPENDED 2'x2' ACOUSTICAL CEILING (SEE DETAILS 1, 2, 3, 4, 5 & 6, SHEET A6.2)
- PENDANT LIGHT FIXTURE
- EXTERIOR LIGHT FIXTURE
- TUBULAR SKYLIGHT
- CEILING FAN: MINKA AIRE MODEL F786-WHF 44", EXT. RATED WALL CONTROL - WC 400 INSTALL AT 7'-0" A.F.F. MIN. (COLOR SELECTED BY OWNER)
- (SD) SMOKE DETECTOR
- (CO) CARBON MONOXIDE DETECTOR
- (CR) CEILING MOUNTED CORD REEL, SEE ELECT.

GENERAL NOTES

A. PROVIDE HEAVY DUTY CEILING SUSPENSION SYSTEM.

B. SWAY BRACING (WITH COMPRESSION STRUT ASSEMBLY) IS REQUIRED AT ALL SUSPENDED CEILING SYSTEMS WITHIN THE FACILITY PER MATERIAL. PROVIDE FOUR NO. 12 GAUGE WIRES SECURED TO THE MAIN RUNNER WITH TWO INCHES OF THE CROSS RUNNER INTERSECTION & SPLAYED 90 DEGREES FROM EACH OTHER AT AN ANGLE NOT EXCEEDING 45 DEGREES FROM THE LINE OF THE CEILING. A STRUT FASTENED TO THE MAIN RUNNER SHALL BE EXTENDED TO AND FASTENED TO THE STRUCTURAL MEMBERS SUPPORTING THE ROOF OR FLOOR ABOVE. THE STRUT SHOULD BE ADEQUATE TO RESIST THE VERTICAL COMPONENT INDUCED BY THE BRACING WIRES. THESE HORIZONTAL RESTRAINT POINTS SHALL BE PLACED NOT MORE THAN 12 FEET ON CENTER IN BOTH DIRECTIONS WITH THE FIRST POINT WITHIN 6 FEET FROM EACH WALL. REFERENCE DETAIL.

C. SUSPENDED ACOUSTICAL CEILINGS SHALL BE INSTALLED IN ACCORDANCE WITH THE PROVISIONS OF ASTM C 635, ASTM C 636 & ASTM E 580 SECTION 5, CBC 1616A. PROVIDE ADDITIONAL NOTES AND DETAILS THAT WILL CONFIRM COMPLIANCE WITH ALL APPLICABLE PROVISIONS FOR SEISMIC RESTRAINT AND BRACING FOR CEILING, LIGHTING FIXTURES, AUDIO/SPEAKERS ETC. CBC 1707.2), METAL SUSPENSION SYSTEMS FOR ACOUSTICAL AND LAY-IN PANEL CEILINGS SHALL CONFORM WITH ASTM C 635 LISTED IN CBC CHAPTER 35 AND SECTION 13.5.6 OF ASCE 7 FOR INSTALLATION IN HIGH SEISMIC AREAS. CBC 2506.2.1

D. PROVIDE 1" CLEARANCE AROUND ALL PENETRATIONS.

E. PROVIDE POSITIVE BRACING AT CEILING.

F. PER ASCE 7-16, SEC 13.5.6.2.2: EXCEPT WHERE RIGID BRACES ARE USED TO LIMIT LATERAL DEFLECTIONS, SPRINKLER HEADS AND OTHER PENETRATIONS, PROVIDE A 2" OVERSIZE RING, SLEEVE, OR ADAPTER THROUGH THE CEILING TILE TO ALLOW FOR FREE MOVEMENT OF AT LEAST 1" IN ALL HORIZONTAL DIRECTIONS. ALTERNATIVELY, A SWING JOINT THAT CAN ACCOMMODATE 1" OF CEILING MOVEMENT IN ALL HORIZONTAL DIRECTIONS IS PERMITTED TO BE PROVIDED AT THE TOP OF THE SPRINKLER HEAD EXTENSION.

G. **NOTE: PER CBC 703.7 - MARKING AND IDENTIFICATION**

FIRE WALLS, FIRE BARRIERS, FIRE PARTITIONS, SMOKE BARRIERS AND SMOKE PARTITIONS OR ANY OTHER WALL REQUIRED TO HAVE PROTECTED OPENINGS OR PENETRATIONS SHALL BE EFFECTIVELY AND PERMANENTLY IDENTIFIED WITH SIGNS OR STENCILING. SUCH IDENTIFICATION SHALL:

- BE LOCATED IN ACCESSIBLE CONCEALED FLOOR, FLOOR-CEILING OR ATTIC SPACES.
- BE LOCATED WITHIN 15 FEET OF THE END OF EACH WALL AND AT INTERVALS NOT EXCEEDING 30 FEET (914 MM) MEASURED HORIZONTALLY ALONG THE WALL OR PARTITION, AND
- INCLUDE LETTERING NOT LESS THAN 3 INCH IN HEIGHT WITH A MINIMUM 3/8-INCH STROKE IN CONTRASTING COLOR INCORPORATING THE SUGGESTED WORDING: **"FIRE AND/OR SMOKE BARRIER--PROTECT ALL OPENINGS"**, OR OTHER WORDING.

KEY NOTE (#)

1. GYP. BD. SOFFIT OVER 2x FRAMING.
2. CEMENT PLASTER CEILING.
3. OVERHEAD COILING DOOR & COMPONENTS - TYP. OF 6.
4. GYP. BD. CEILING OVER 2x FRAMING - SEE 18/A6.1 & STRUCT.
5. TUBULAR SKYLIGHT - TYP. OF 8.
6. CEMENT PLASTER CONTROL JOINT.
7. CEMENT PLASTER / FLAT OR CURVED FOAM SHAPED CEILING OVER FRAMING - FIELD VERIFY.
8. CEILING ACCESS PANEL - TYP. OF 3. PROVIDE BACKING & PAINT TO MATCH ADJACENT CEILING AS REQUIRED - FIELD VERIFY.
9. PREFINISHED SHEET METAL GUTTER & DOWNSPOUT.
10. MOTOR FOR VEHICLE EXHAUST REMOVAL SYSTEM. SEE MECH.
11. CEMENT PLASTER OVER FOAM EAVE CORNICE - TYP.
12. 1/2-HOUR RATED CEILING: 5/8" GYPSUM BOARD TYPE "X". PROVIDE DAMPERS AT AC REGISTERS. PROVIDE FIRE RATED RECESSED LIGHT FIXTURE ENCLOSURES. REFER TO FIRE RATED ASSEMBLIES, DETAIL 5/A2.6A. SEE MECH. & ELECT.
13. EXHAUST HOOD & COMPONENTS - SEE SPECS & MECH.
14. BIG CEILING FAN, TYP. OF 2 - SEE MECH. & ELECT.
15. EXPOSED CEILING & R-30 SCRIM-FACED ROOF INSULATION - PAINT ALL EXPOSED STRUCTURE & CONDUITS.
16. MANUFACTURED STONE VENEER CEILING TO MATCH ADJACENT WALL - FIELD VERIFY.
17. WALL LINE ABOVE SHOWN DASHED - TYP.
18. ROOF LINE ABOVE SHOWN DASHED - TYP.
19. CEILING FAN - TYP. OF 16. COORDINATE POWER WITH ELECT.

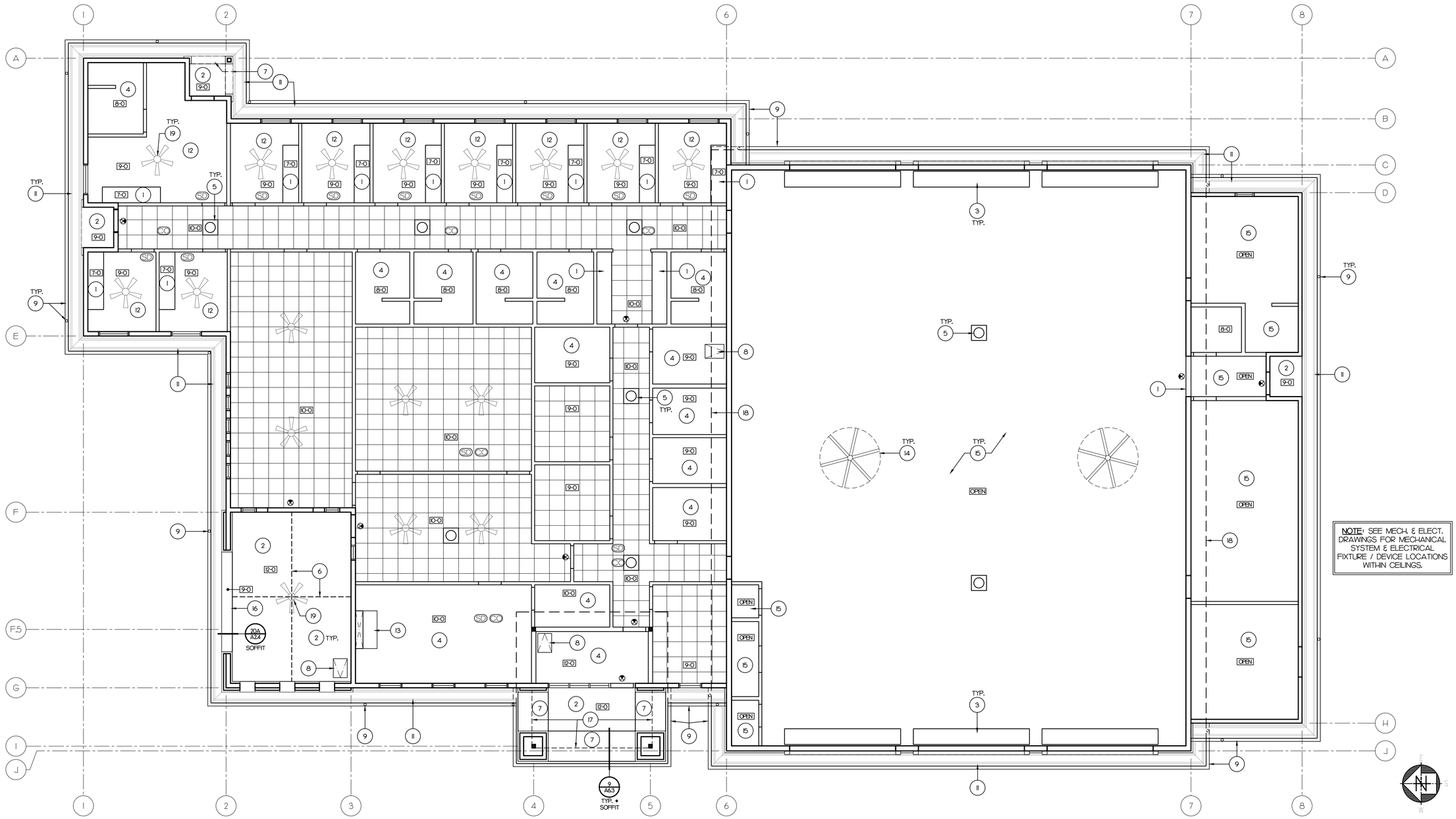

REFLECTED CEILING PLAN - FIRE STATION

SCALE: 3/16"=1'-0"

4

J:\380-City of Perris\380-03-25 South Perris Fire Station\Architecture\A2.5A - FS RCP.dwg
05/05/2026 9:29AM

STK
42095 ZEVO DR., TEMECULA, CALIFORNIA 92590-3780
Phone: 951.296.9110 Fax: 951.296.6079 Email: stk@stkinc.com

CONSULTANT:

REVIEWED FOR CODE COMPLIANCE

THESE PLANS AND DOCUMENTS HAVE BEEN REVIEWED AND FOUND TO BE IN COMPLIANCE WITH THE CODES ADOPTED BY THE CITY OF PERRIS JURISDICTION. ISSUANCE OF A PERMIT IS NOT AN APPROVAL SUBJECT TO APPROVAL BY OTHER DEPARTMENTS AND ANY NOTED CONDITIONS. THE ISSUANCE OF A PERMIT BASED ON THESE PLANS AND DOCUMENTS DOES NOT APPROVAL OF ANY VIOLATIONS OF APPLICABLE CODES AND STANDARDS. NOR RELIEVE THE OWNER, DESIGN PROFESSIONAL OF RECORD, OR CONTRACTOR OF RESPONSIBILITY FOR COMPLYING WITH APPLICABLE CODES AND STANDARDS. THE DOCUMENTS DOES NOT AUTHORIZE CONSTRUCTION TO BE EXECUTED IN VIOLATION OF ANY FEDERAL, STATE OR LOCAL REGULATIONS.

BUILDING BUREAU ACCEPTANCE
REVIEWED BY: STEVEN M. PENA

THIS SET OF THE PLANS AND SPECIFICATIONS MUST BE KEPT ON THE JOB SITE AT ALL TIMES IT IS UNLAWFUL TO MAKE ANY CHANGES OR ALTERATIONS ON THE SAME, WITHOUT AUTHORIZATION FROM THE CITY OF PERRIS. IT IS ALSO UNLAWFUL TO OCCUPY THE BUILDING UNTIL A FINAL APPROVAL IS OBTAINED BY ALL APPLICABLE DEPARTMENTS.

ARCHITECTURAL SOLUTIONS INC.

PROJECT ADMINISTERED BY:
CITY OF PERRIS

101 NORTH "D" STREET
PERRIS, CA 92570

PROJECT NAME:
FIRE STATION 105 AND ADMINISTRATION BUILDING

PROJECT CIP: F077

2495 MURRIETA ROAD
PERRIS, CA 92585

ISSUE INFORMATION:

DATE:	INFORMATION:
11-26-25	95% CD SUBMITTAL
02-05-26	1 1st PC RESPONSE
02-19-26	2 2nd PC RESPONSE
02-22-26	3 3rd PC RESPONSE
04-27-26	4 4th PC RESPONSE

SHEET INFORMATION:

STK PROJECT NO.: 365-03-25
SCALE: AS NOTED
DATE: NOVEMBER 2025
PLOT DATE: –
DRAWN BY: JN

SEAL:

LICENSED ARCHITECT ANTONIO FINLAY No. C31476 REN. 07-31-27 STATE OF CALIFORNIA

SHEET TITLE:
REFLECTED CEILING PLAN - FIRE STATION

SHEET NO.:
A2.5A

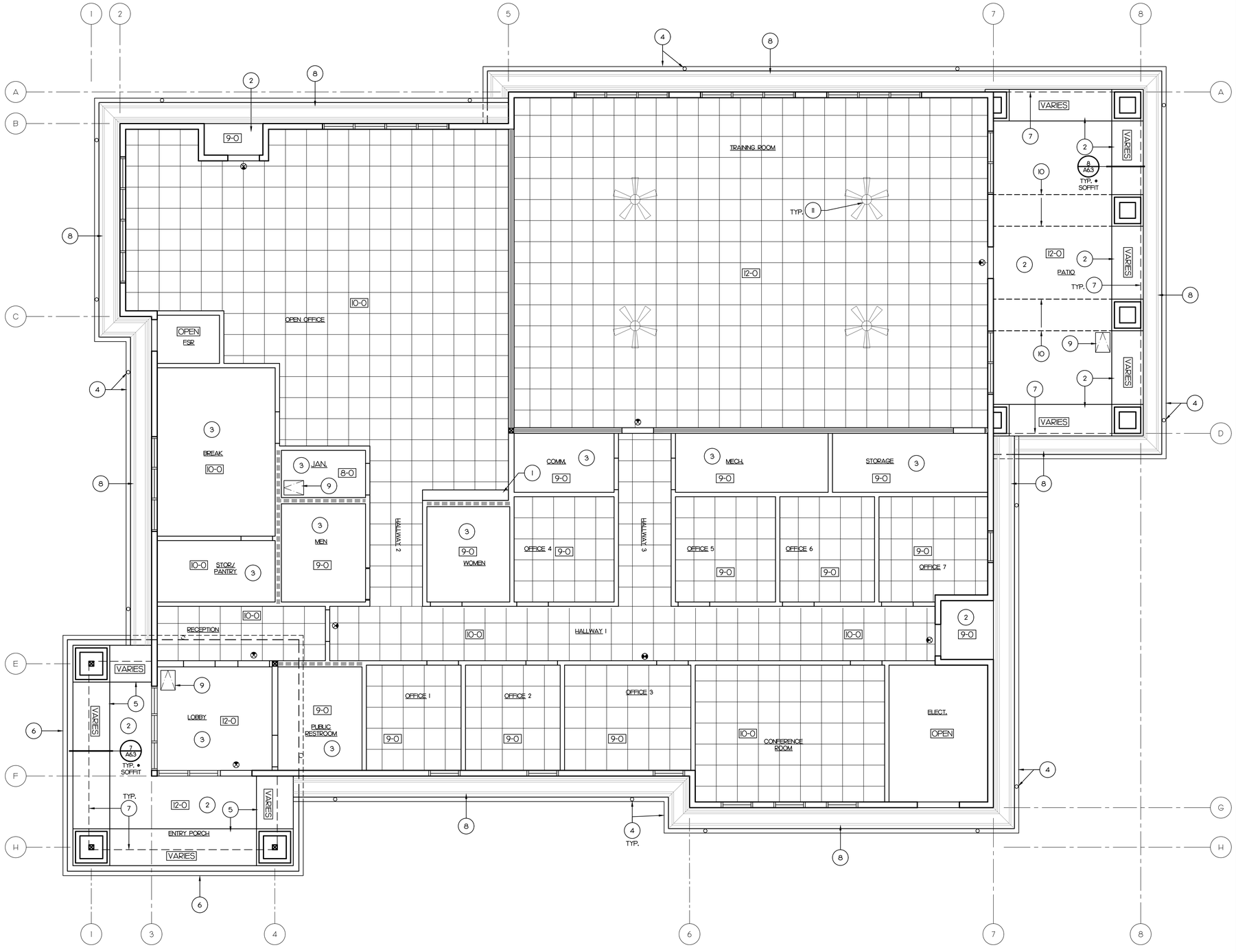

KEY NOTE (#)

1. GYP. BD. SOFFIT OVER 2x FRAMING.
2. CEMENT PLASTER CEILING.
3. GYP. BD. CEILING OVER 2x FRAMING - SEE 18/A6.1 & STRUCT.
4. PREFINISHED ROOF GUTTER & DOWNSPOUT, DRAIN UNDER SIDEWALK & DAYLIGHT TO STORM DRAIN - SEE CIVIL.
5. CEMENT PLASTER OVER FOAM SHAPED CEILING.
6. PREFINISHED ROOF GUTTER & DOWNSPOUT - SPILL TO LOWER ROOF.
7. WALL LINE ABOVE SHOWN DASHED - TYP.
8. CEMENT PLASTER OVER FOAM SHAPED CORNICE / CEILING.
9. CEILING ACCESS PANEL - TYP. OF 3. PROVIDE BACKING AS REQUIRED & FIELD VERIFY EXACT LOCATION.
10. CEMENT PLASTER CONTROL JOINT.
11. CEILING FAN - TYP. OF 4. COORDINATE POWER WITH ELECT.

CEILING LEGEND

- EXIT SIGN
- 22" x 30" CEILING ACCESS PANEL
- SUSPENDED 2'x2' ACOUSTICAL CEILING (SEE DETAILS 1, 2, 3, 4, 5 & 6, SHEET A6.2)
- SURFACE MOUNTED FIXTURE UNDER CABINET. (NOTE: NO EXPOSED CONDUIT, USE ELECT. WIRING WHIP)
- PENDANT LIGHT FIXTURE
- EXTERIOR LIGHT FIXTURE
- TUBULAR SKYLIGHT
- CEILING FAN: MINKA AIRE MODEL F786-WHF 44", EXTRATED WALL CONTROL - WC 400 INSTALL AT +9'-0" A.F.F. MIN. COLOR SELECTED BY OWNER
- SD SMOKE DETECTOR

A. PROVIDE HEAVY DUTY CEILING SUSPENSION SYSTEM.

B. SWAY BRACING (WITH COMPRESSION STRUT ASSEMBLY) IS REQUIRED AT ALL SUSPENDED CEILING SYSTEMS WITHIN THE FACILITY PER MATERIAL. PROVIDE FOUR NO. 12 GAUGE WIRES SECURED TO THE MAIN RUNNER WITH TWO INCHES OF THE CROSS RUNNER INTERSECTION & SPLAYED 90 DEGREES FROM EACH OTHER AT AN ANGLE NOT EXCEEDING 45 DEGREES FROM THE LINE OF THE CEILING. A STRUT FASTENED TO THE MAIN RUNNER SHALL BE EXTENDED TO AND FASTENED TO THE STRUCTURAL MEMBERS SUPPORTING THE ROOF OR FLOOR ABOVE. THE STRUT SHOULD BE ADEQUATE TO RESIST THE VERTICAL COMPONENT INDUCED BY THE BRACING WIRES. THESE HORIZONTAL RESTRAINT POINTS SHALL BE PLACED NOT MORE THAN 12 FEET ON CENTER IN BOTH DIRECTIONS WITH THE FIRST POINT WITHIN 6 FEET FROM EACH WALL. REFERENCE DETAIL.

C. SUSPENDED ACOUSTICAL CEILINGS SHALL BE INSTALLED IN ACCORDANCE WITH THE PROVISIONS OF ASTM C 635, ASTM C 636 & ASTM E 580 SECTION 5, CBC 1613. PROVIDE ADDITIONAL NOTES AND DETAILS THAT WILL CONFIRM COMPLIANCE WITH ALL APPLICABLE PROVISIONS FOR SEISMIC RESTRAINT AND BRACING FOR CEILING, LIGHTING FIXTURES, AUDIO/SPEAKERS ETC. CBC 107.2.1, METAL SUSPENSION SYSTEMS FOR ACOUSTICAL AND LAY-IN PANEL CEILINGS SHALL CONFORM WITH ASTM C 635 LISTED IN CBC CHAPTER 35 AND SECTION 13.5.6 OF ASCE 7 FOR INSTALLATION IN HIGH SEISMIC AREAS. CBC 2506.2.1

D. PROVIDE 1" CLEARANCE AROUND ALL PENETRATIONS.

E. PROVIDE POSITIVE BRACING AT CEILING.

F. PER ASCE 7-16, SEC 13.5.6.2.2: EXCEPT WHERE RIGID BRACES ARE USED TO LIMIT LATERAL DEFLECTIONS, SPRINKLER HEADS AND OTHER PENETRATIONS, PROVIDE A 2" OVERSIZE RING, SLEEVE, OR ADAPTER THROUGH THE CEILING TILE TO ALLOW FOR FREE MOVEMENT OF AT LEAST 1" IN ALL HORIZONTAL DIRECTIONS. ALTERNATIVELY, A SWING JOINT THAT CAN ACCOMMODATE 1" OF CEILING MOVEMENT IN ALL HORIZONTAL DIRECTIONS IS PERMITTED TO BE PROVIDED AT THE TOP OF THE SPRINKLER HEAD EXTENSION.

REFLECTED CEILING PLAN - ADMIN. BUILDING (ADDITIVE ALTERNATE #1)

SCALE: 1/4"=1'-0" (8)

GENERAL NOTES

STK
42095 ZEVO DR., TEMECULA, CALIFORNIA 92590-3780
Phone: 951.296.9110 Fax: 951.296.6079 Email: stk@stkinc.com

CONSULTANT:

REVIEWED FOR CODE COMPLIANCE

THESE PLANS AND DOCUMENTS HAVE BEEN REVIEWED AND FOUND TO BE IN COMPLIANCE WITH THE CODES ADOPTED BY THE CITY OF PERRIS JURISDICTION. ISSUANCE OF A PERMIT IS NOT CONSIDERED FINAL SUBJECT TO APPROVAL BY OTHER DEPARTMENTS AND ANY NOTED CONDITIONS. THE APPROVAL OF THESE PLANS AND DOCUMENTS DOES NOT AUTHORIZE THE APPROVAL OF ANY VIOLATIONS OF APPLICABLE CODES AND STANDARDS. NOR RELIEVE THE OWNER, DESIGN PROFESSIONAL OF RECORD, OR CONTRACTOR OF RESPONSIBILITY FOR COMPLYING WITH APPLICABLE CODES AND STANDARDS. THE DOCUMENTS DOES NOT AUTHORIZE CONSTRUCTION NOT DESIGNED IN VIOLATION OF ANY FEDERAL, STATE OR LOCAL REGULATIONS.

BUILDING BUREAU SUBMITTAL INC.
REVIEWED BY: STEVEN MA, PE, CASp

THIS SET OF THE PLANS AND SPECIFICATIONS MUST BE KEPT ON THE JOB SITE AT ALL TIMES IT IS UNLAWFUL TO MAKE ANY CHANGES OR ALTERATIONS ON THE PLANS WITHOUT AUTHORIZATION FROM THE CITY DEPARTMENT. IT IS UNLAWFUL TO OCCUPY THE BUILDING UNTIL A FINAL APPROVAL IS GRANTED BY ALL APPLICABLE DEPARTMENTS.

BUILDING BUREAU SOLUTIONS INC.

PROJECT ADMINISTERED BY:
CITY OF PERRIS

101 NORTH "D" STREET
PERRIS, CA 92570

PROJECT NAME:
FIRE STATION 105 AND ADMINISTRATION BUILDING

PROJECT CIP: F077

2495 MURRIETA ROAD
PERRIS, CA 92585

ISSUE INFORMATION:

DATE:	INFORMATION:
11-26-25	95% CD SUBMITTAL
02-05-26	1 1st PC RESPONSE
02-19-26	2 2nd PC RESPONSE

SHEET INFORMATION:

STK PROJECT NO.: 365-03-25
SCALE: AS NOTED
DATE: NOVEMBER 2025
PLOT DATE: –
DRAWN BY: JN

SEAL:

LICENSED ARCHITECT ANTONIO FINALDI No. C31476 REN. 07-31-27 STATE OF CALIFORNIA

SHEET TITLE:
REFLECTED CEILING PLAN - ADMIN. BLDG.

SHEET NO.:
A2.5B

J:\365-City of Perris\365-03-25 South Perris Fire Station\Architecture\A2.5B - ADMIN BLDG RCP.dwg
04/14/2026 2:09PM

FIRE RATED ASSEMBLIES

GA FILE NO. WP 3005	PROPRIETARY	1/2 HOUR FIRE	50 to 54 STC SOUND

GYPSUM PANELS, WOOD STUDS

Fire Design:
One layer 5/8" proprietary gypsum panel applied parallel or at right angles to each side of 2 x 4 wood studs 16" o.c. with 1-5/8" Type S screws 12" o.c.

Vertical joints centered over studs and staggered one stud cavity on opposite sides. Horizontal joints need not be staggered or backed. **(LOAD-BEARING)**

Sound Design:
Sound tested with resilient channels on ONE SIDE, 3-1/2" glass fiber insulation and a double layer of 5/8" proprietary gypsum panel applied with screws spaced 12" o.c.

PROPRIETARY GYPSUM PANEL

United States Gypsum Company
– 5/8" Sheetrock® Brand EcoSmart Panels Firecode 30®

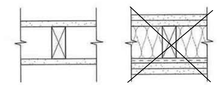

Thickness: 4-3/4" (Fire)
6-1/4" (Sound)

Approx. Weight: 4.4 psf (Fire)
8.0 psf (Sound)

Fire Test: UL R1319, 11NK03873, 4-15-11, UL Design U407

Sound Test: RAL TL11-132, 5-23-11

1/2 HOUR FIRE RATED WALL

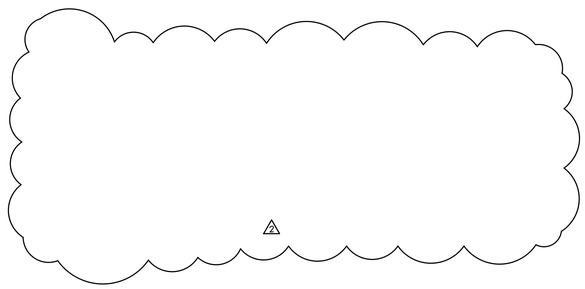

Roof/Ceiling Assemblies	Fire-rated Construction: Fire Rating	Detail & Physical Data	Description & Test No.	Acoustical Performance: STC	IIC	Description & Test No.	System Reference
	1 hr.	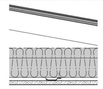	5/8" SHEETROCK Brand Gypsum Panel, FIRECODE C core, pitched wood trusses of min. 2 x 4 lumber, any UL Class A, B or C roofing system—RC-1 channels or equivalent spaced 12" or 16" o.c.—gypsum panels attached with 1" Type S screws, joints finished—optional insulation directly over gypsum ceiling membrane—**UL Des P522**	N/A			S

*Where thermal insulation is shown in assembly drawings, the specific product is required in the assembly to protect the rated design. Fiberglass insulation cannot be substituted for Thermafiber® Insulation.
**Where RC-1 is referenced, use RC-1 Resilient Channels or equivalent.

United States Gypsum Company SA924 11

1/2 HOUR FIRE RATED CEILING
5/8" TYPE "X" GYPSUM BOARD, PROVIDES
30 MIN. RATING TO AN ASSEMBLY PER ASTM C36.

KEY NOTE ⑪

1. STANDING SEAM5 METAL ROOF OVER WEATHER BARRIER, PLYWOOD SHEATHING & STRUCTURAL FRAMING - SEE STRUCT.
2. LINE OF WALL BELOW SHOWN DASHED - TYP.
3. PREFINISHED ROOF GUTTER & DOWNSPOUT, DRAIN UNDER SIDEWALK & DAYLIGHT TO STORM DRAIN - SEE CIVIL.
4. TUBULAR SKYLIGHT - TYP. OF 8, COMPLY WITH ICBO/ICC AC-16. SEE SPECS & INSTALL PER MANUF.'S RECOMMENDATIONS.
5. STANDING SEAM METAL ROOF CRICKET - FIELD VERIFY.
6. PREFINISHED ROOF GUTTER & DOWNSPOUT - SPILL TO LOWER ROOF.
7. **VHF RADIO ANTENNA MOUNT AND CABLE FEED: SEE DATA 2.0**
   A 2" RIGID CONDUIT SHALL BE INSTALLED FROM THE IT/COMMUNICATIONS ROOM TO THE ROOF. THE CONDUIT ROOF PENETRATION SHALL BE NEAR THE HIGHEST POINT OF THE ROOF AND SHALL EXTEND 3'-0" MIN. ABOVE THE ROOF LINE AND FITTED WITH A WEATHER HEAD TO ALLOW CABLING TO THE ANTENNA. THE CONDUIT SHALL BE MOUNTED IN A MANOR AT THE ROOF TO ALLOW FOR A STURDY ANTENNA MOUNT.
8. ROOF VENTS (THROUGH ROOF) FOR KITCHEN HOODS - SEE MECH.
9. VEHICLE EXHAUST FAN & FLEXIBLE HOSE WITH FITTINGS & CONNECTIONS - SEE MECH.

SCALE: N.T.S. (5)

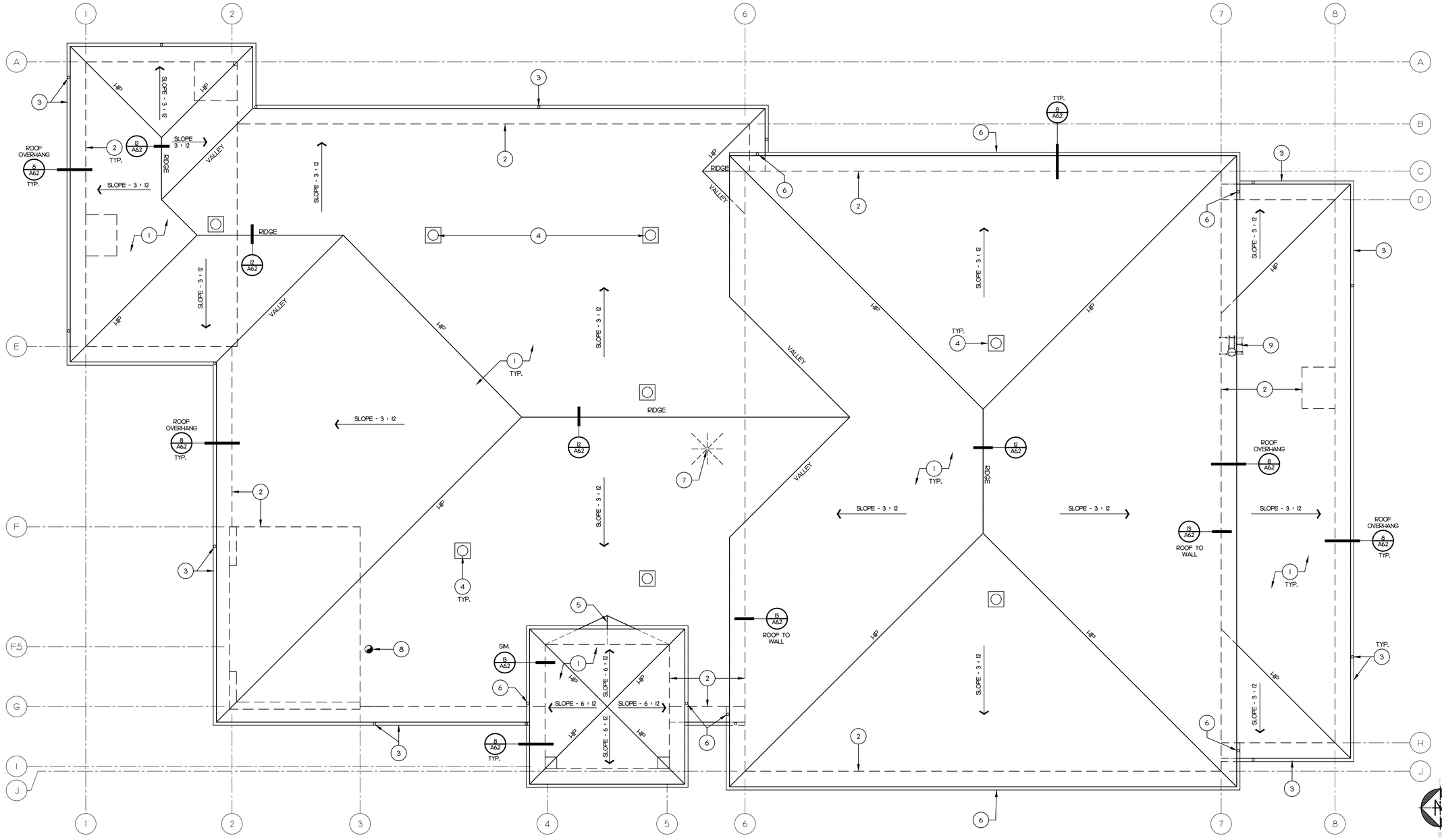

ROOF PLAN - FIRE STATION

SCALE: 3/16"=1'-0" (4)

STK
42095 ZEVO DR., TEMECULA, CALIFORNIA 92590-3780
Phone: 951.296.9110 Fax: 951.296.6079 Email: stk@stkinc.com

CONSULTANT:

REVIEWED FOR CODE COMPLIANCE

THESE PLANS AND DOCUMENTS HAVE BEEN REVIEWED AND FOUND TO BE IN COMPLIANCE WITH THE CODES AND ORDINANCES OF THE CITY OF PERRIS JURISDICTION. ISSUANCE OF A PERMIT IS RECOMMENDED, SUBJECT TO APPROVAL BY OTHER DEPARTMENTS AND ANY NOTED CONDITIONS. THE ISSUANCE OF A PERMIT BASED ON THESE PLANS AND DOCUMENTS, OR APPROVAL OF ANY VIOLATIONS OF APPLICABLE CODES AND STANDARDS, NOR RELIEVE THE OWNER, DESIGN PROFESSIONAL OF RECORD, OR CONTRACTOR OF RESPONSIBILITY FOR COMPLIANCE WITH APPLICABLE CODES AND STANDARDS. THE DOCUMENTS DOES NOT AUTHORIZE CONSTRUCTION TO PROCEED IN VIOLATION OF ANY FEDERAL, STATE OR LOCAL REGULATIONS.

BUILDING BUREAU ACCEPTANCE
REVIEWED BY: STEVEN MA, P.E., CASp

THIS SET OF THE PLANS AND SPECIFICATIONS MUST BE KEPT ON THE JOB SITE AT ALL TIMES IT IS UNLAWFUL TO MAKE ANY CHANGES OR ALTERATIONS ON THE PLANS WITHOUT AUTHORIZATION FROM THE CITY DEPARTMENT. IT IS UNLAWFUL TO OCCUPY THE BUILDING UNTIL A FINAL APPROVAL IS OBTAINED BY ALL APPLICABLE DEPARTMENTS.

© COPYRIGHT STK ARCHITECTURAL SOLUTIONS INC.

PROJECT ADMINISTERED BY:
CITY OF PERRIS

101 NORTH "D" STREET
PERRIS, CA 92570

PROJECT NAME:
FIRE STATION 105 AND ADMINISTRATION BUILDING

PROJECT CIP: F077

2495 MURRIETA ROAD
PERRIS, CA 92585

ISSUE INFORMATION:	
DATE:	INFORMATION:
11-26-25	95% CD SUBMITTAL
02-05-26	1 1st PC RESPONSE
02-19-26	2 2nd PC RESPONSE

SHEET INFORMATION:	
STK PROJECT NO.:	365-03-25
SCALE:	AS NOTED
DATE:	NOVEMBER 2025
PLOT DATE:	–
DRAWN BY:	JN

SEAL:

LICENSED ARCHITECT ANTONIO FINLAY No. C31476 REN. 07-31-27 STATE OF CALIFORNIA

SHEET TITLE:
ROOF PLAN - FIRE STATION

SHEET NO.:
A2.6A

J:\365 City of Perris\365-03-25 South Perris Fire Station\Architecture\A2.6A - FS ROOF PLAN.dwg
04/14/2026 2:08PM

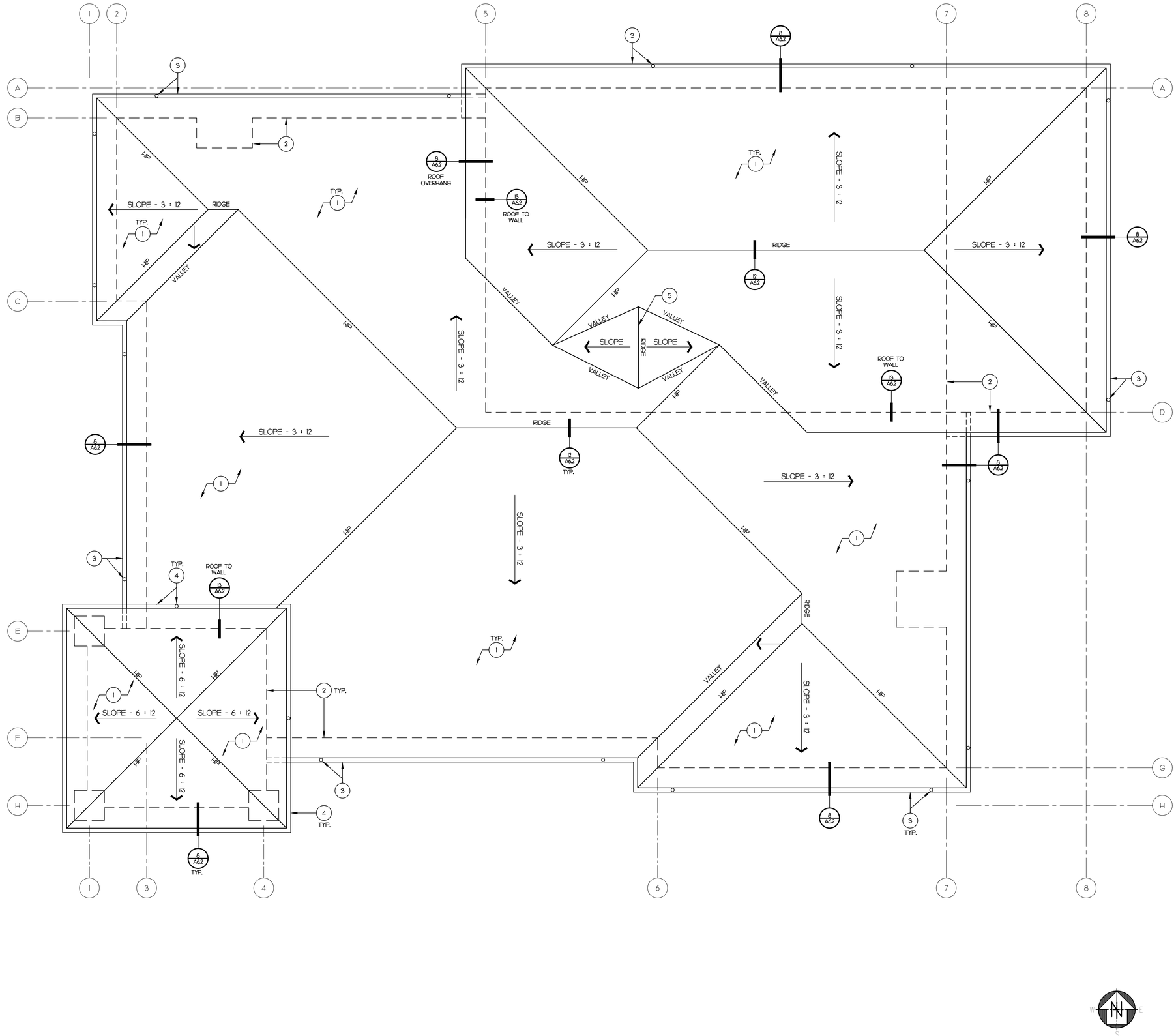

KEY NOTE

1. STANDING SEAMS METAL ROOF OVER WEATHER BARRIER, PLYWOOD SHEATHING & STRUCTURAL FRAMING - SEE STRUCT.
2. LINE OF WALL BELOW SHOWN DASHED - TYP.
3. PREFINISHED ROOF GUTTER & DOWNSPOUT, DRAIN UNDER SIDEWALK & DAYLIGHT TO STORM DRAIN - SEE CIVIL.
4. PREFINISHED ROOF GUTTER & DOWNSPOUT - SPILL TO LOWER ROOF.
5. STANDING SEAM METAL ROOF CRICKET OVER WEATHER BARRIER, 2x FRAMING @ 16" O.C. & 5/8" CDX PLYWOOD - FIELD VERIFY.

ROOF PLAN - ADMIN. BUILDING (ADDITIVE ALTERNATE #1)

SCALE: 1/4"=1'-0"

8

STK ARCHITECTURE, INC.
42095 ZEVO DR., TEMECULA, CALIFORNIA 92590-3780
Phone: 951.296.9110 Fax: 951.296.6079 Email: stk@stkinc.com

CONSULTANT:

REVIEWED FOR CODE COMPLIANCE

THESE PLANS AND DOCUMENTS HAVE BEEN REVIEWED AND FOUND TO BE IN COMPLIANCE WITH THE APPLICABLE CODE REQUIREMENTS OF THE JURISDICTION. ISSUANCE OF A PERMIT BASED ON PLANS SUBJECT TO APPROVAL BY OTHER DEPARTMENTS AND ANY NOTED CONDITIONS THE SUBMITTAL OF THESE PLANS AND DOCUMENTS IS NOT AN APPROVAL OR AN APPROVAL OF ANY VIOLATION OF APPLICABLE CODES AND STANDARDS, NOR RELIEVE THE OWNER, DESIGN PROFESSIONAL OF RECORD, OR CONTRACTOR OF COMPLIANCE WITH THE APPLICABLE CODES AND STANDARDS. PLAN REVIEW OF DOCUMENTS DOES NOT AUTHORIZE CONSTRUCTION IN PROCEED IN VIOLATION OF ANY FEDERAL, STATE OR LOCAL REGULATION.

BUILDING BUREAU SOLUTIONS, INC.
REVIEWED BY: STEVEN M. PE, CBSE

THIS SET OF THE PLANS AND SPECIFICATIONS MUST BE KEPT ON THE JOB SITE AT ALL TIMES AND IT IS UNLAWFUL TO MAKE ANY CHANGES OR ALTERATIONS WITHOUT PERMISSION FROM THE CITY ORDINANCE. THE STRUCTURE(S) IS NOT PERMITTED UNTIL FINAL APPROVAL IS OBTAINED BY ALL APPLICABLE DEPARTMENTS.

BUILDING BUREAU SOLUTIONS INC.

PROJECT ADMINISTERED BY:
CITY OF PERRIS

101 NORTH "D" STREET
PERRIS, CA 92570

PROJECT NAME:
FIRE STATION 105
AND ADMINISTRATION
BUILDING

PROJECT CIP: F077

2495 MURRIETA ROAD
PERRIS, CA 92585

ISSUE INFORMATION:

DATE:	INFORMATION:
11-26-25	95% CD SUBMITTAL
02-05-26	1 1st PC RESPONSE
02-19-26	2 2nd PC RESPONSE

SHEET INFORMATION:

STK PROJECT NO.: 365-03-25
SCALE: AS NOTED
DATE: NOVEMBER 2025
PLOT DATE: –
DRAWN BY: JN

SEAL:

LICENSED ARCHITECT
ANTONIO FINALDI
No. C31476
REN. 07-31-27
STATE OF CALIFORNIA

SHEET TITLE:
ROOF PLAN -
ADMIN. BLDG.

SHEET NO.:
A2.6B

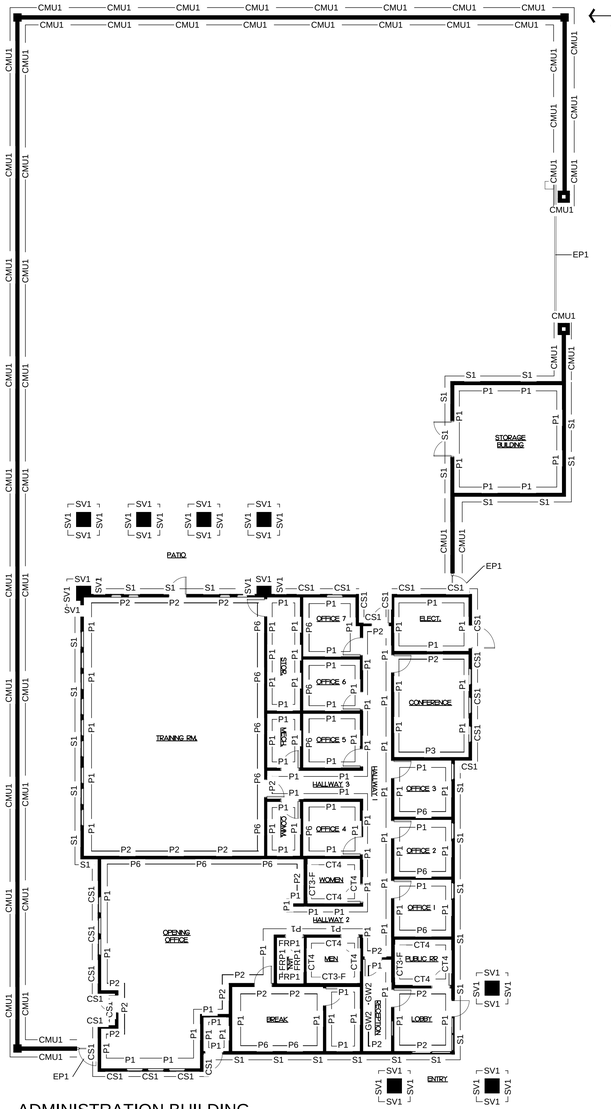

ADMINISTRATION BUILDING

SCALE: N.T.S.

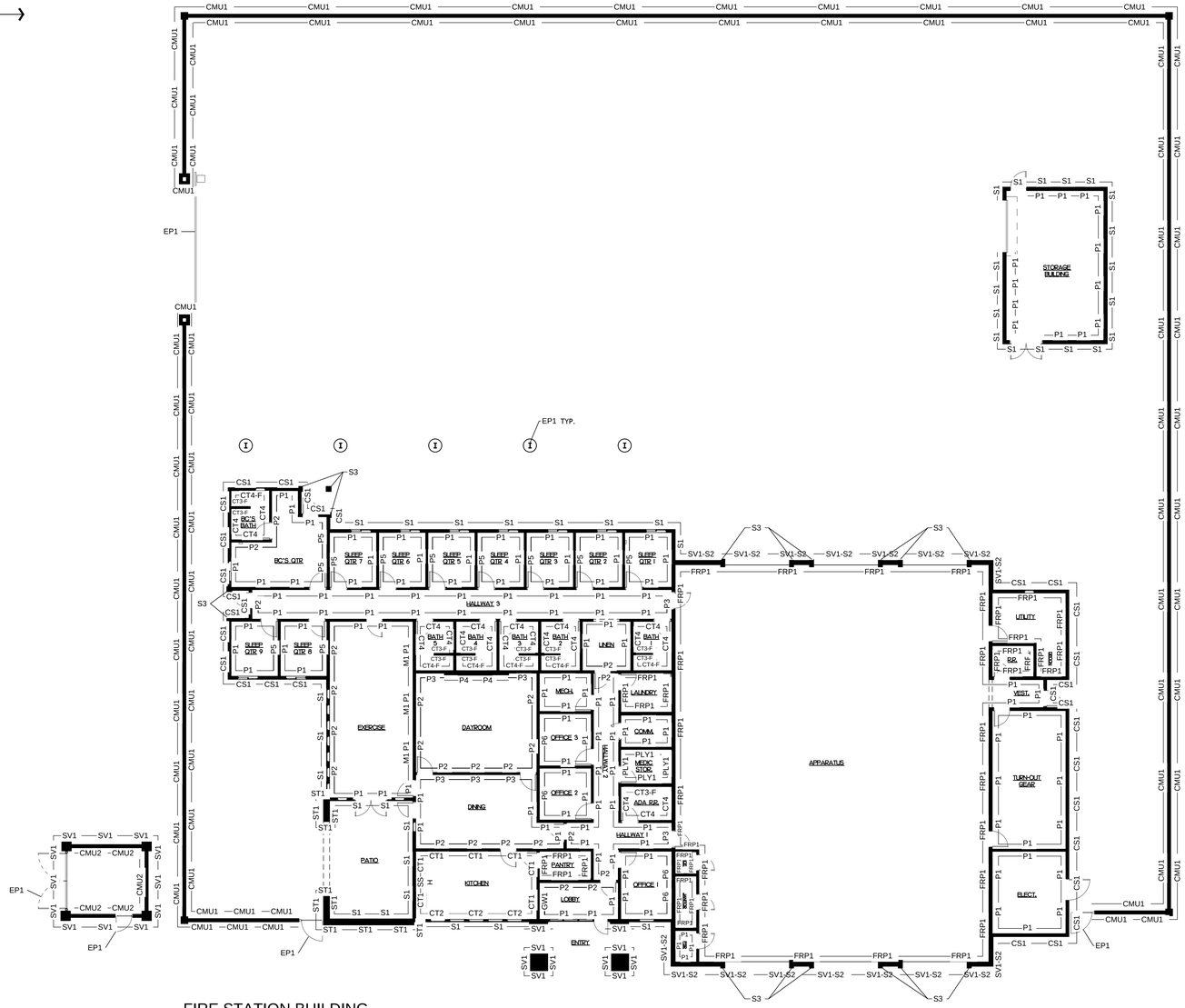

FIRE STATION BUILDING

SCALE: N.T.S.

FINISH SCHEDULE

EXTERIOR

TAG	DESCRIPTION	MANUFACTURER	NAME / NUMBER	LOCATION
WF1	WINDOW FRAMES	MILGARD	SOLID VINYL, TAN	WINDOW FRAMES
S1	PREMIER STUCCO FINISH	PAREX	LIGHT, T017	FIELD
S2	PREMIER STUCCO FINISH	PAREX	POTTERY, 1566	APPARATUS & ADMIN ENTRANCE ACCENT WALL
S3	PREMIER STUCCO FINISH	PAREX	WARM SAND, 10432	CORNICE
CS1	CONCRETE SIDING, HORIZONTAL	JAMES HARDIE	PLANK SELECT CEDARMILL, MONTEREY TAUPE	APPARATUS SERVICE AND BC'S QUARTER
SV1	STONE VENEER	EL DORADO STONE	LIMESTONE, GRAND BANKS	PILASTERS, WAINSCOTS, PATIO AND TRASH ENCLOSURE WALLS
CMU1	CONCRETE MASONRY UNIT	ANGELUS	NATURAL GRAY, SPLIT FACE	FENCE WALLS
CMU2	CONCRETE MASONRY UNIT	ANGELUS	NATURAL GRAY, PRECISION	TRASH ENCLOSURE INSIDE FACE
EP1	EXTERIOR PAINT	SHERWIN WILLIAMS	MANOR HOUSE SW 7505 / 240-C7	METAL FENCES, GATES, EXTERIOR DOORS AND FRAMES
EP2	EXTERIOR PAINT	SHERWIN WILLIAMS	FUNCTIONAL GRAY SW 7024 / 241-C3	APP DOORS, CANOPY STRUCTURES
MR1	METAL ROOF	TAYLOR METAL PRODUCTS	ZINK GREY (SRI-30)	BUILDING AND CANOPY ROOFING
GL1	GLASS	VITRO ARCHITECTURAL	TINTED GRAY - LOW-E	TYPICAL AT WINDOWS
GL2	GLASS	VITRO ARCHITECTURAL	TRANSLUCENT GLASS	FIRE STATION & ADMIN ENTRY TOWER UPPER WINDOWS

INTERIOR

TAG	DESCRIPTION	MANUFACTURER	NAME / NUMBER	LOCATION
CT1	CERAMIC TILE	DALTILE	LINEAR MATTE URBAN PUTTY 0761, 4x12 STACKED VERTICAL	KITCHEN WALL FIELD 7'-0" HIGH, P1 ABOVE
CT2	CERAMIC TILE	DALTILE	LINEAR MATTE MUSTARD 7012, 4x12 STACKED VERTICAL	KITCHEN WALL ACCENT 7'-0" HIGH, P1 ABOVE, BREAK WALL ACCENT 5'-0" HIGH, P1 ABOVE
CT3-F	CERAMIC TILE	DALTILE	ARTCRAFTED COTTO AC27, 3x12 STACKED VERTICAL	RESTROOM WALL ACCENT AND SHOWER, FULL HIGH
CT4 / CT4-F	CERAMIC TILE	DALTILE	REMINISCENT, MEMENTO WHITE, RM20, 12x24 STACKED SQUARE	RESTROOM WALLS FIELD 4'-0" HIGH, P1 ABOVE - FULL HIGH AT SHOWER
CT5	CERAMIC TILE	DALTILE	REMINISCENT, RECLAIMED GRAY, RM23, 2X2 FLOOR TILE	PUBLIC RESTROOM FLOOR
FRP1	FIBER REINFORCED POLYMER	MARLITE	LIGHT GRAY S2S S490N, TEXTURED	APPARATUS UP TO 8'-0" HIGH, P1 ABOVE
GW1	GRAPHIC WALL	MDC	TBD FIRE DEPARTMENT SCENE / LOGO	ENTRY ACCENT
GW2	GRAPHIC WALL	MDC	TBD CITY LOGO / LOGO	ADMIN RECEPTION ACCENT WALL
P1	PAINT	SHERWIN WILLIAMS	ALPACA SW 7022 / 241-C1	FIELD WALLS
P2	PAINT	SHERWIN WILLIAMS	FUNCTIONAL GRAY SW 7024 / 241-C3	PUBLIC ACCENT
P3	PAINT	SHERWIN WILLIAMS	DECOROUS AMBER SW 0007	TV AND DINING ACCENT
P4	PAINT	SHERWIN WILLIAMS	MANOR HOUSE SW 7505 / 240-C7	TV BACKGROUND ACCENT
P5	PAINT	SHERWIN WILLIAMS	DAPHNE SW 9151 / 224-C4	QUARTERS ACCENT
P6	PAINT	SHERWIN WILLIAMS	CUPOLA YELLOW SW 7692 / 295-C7	OFFICE ACCENT WALL
P7	PAINT	SHERWIN WILLIAMS	ROOKWOOD TERRA COTTA SW 2803	APPARATUS TRUSSES
P8	PAINT	SHERWIN WILLIAMS	WHITE	CEILINGS
PL1	PLASTIC LAMINATE	WILSONART	WINDSWEPT PEWTER	CASEWORK
SS1	STAINLESS STEEL	TBD	STAINLESS STEEL	KITCHEN STOVE BACKSPLASH
SC1	SEALED CONCRETE	TBD	TBD	FLOORING
SD1	STAINED DOOR VENEER	VT INDUSTRIES	WHITE BIRCH, SERENGETI SE15	INTERIOR DOORS
DF1	DOOR FRAMES (INTERIOR)	TIMELY	BROWNTONE (SC101)	INTERIOR DOOR FRAMES
ARF1	ATHLETIC RESILIANT FLOORING	ROPPE	TUFLEX SPARTUS, 901 ADOBE	EXERCISE ROOM
Q1	QUARTZ SURFACES	DALTILE	SIMPLE WHITE NQ76	COUNTERTOPS
RB1	RUBBER TILE BASE	MOHAWK	CHARCOAL 958	INTERIORS

STK
ALL SHEET METAL, INC.
42095 ZEVO DR., TEMECULA, CALIFORNIA 92590-3780
Phone: 951.296.9110 Fax: 951.296.6079 Email: stk@stkinc.com

CONSULTANT:

REVIEWED FOR CODE COMPLIANCE

THESE PLANS AND DOCUMENTS HAVE BEEN REVIEWED AND FOUND TO BE IN COMPLIANCE WITH THE CODES AND ORDINANCES OF THE CITY OF PERRIS JURISDICTION. ISSUANCE OF A PERMIT IS RECOMMENDED, SUBJECT TO APPROVAL BY OTHER DEPARTMENTS AND ANY NOTED CONDITIONS. THE ISSUANCE OF A PERMIT BASED ON THESE PLANS AND DOCUMENTS, THE APPROVAL OF ANY VIOLATIONS, APPLICABLE CODES AND STANDARDS, NOR RELIEVE THE OWNER, DESIGN PROFESSIONAL OF RECORD, OR CONTRACTOR OF RESPONSIBILITY FOR ANY ERRORS OR OMISSIONS CONTAINED IN THESE DOCUMENTS DOES NOT AUTHORIZE CONSTRUCTION NOT IN COMPLIANCE WITH OR IN VIOLATION OF ANY FEDERAL, STATE OR LOCAL REGULATIONS.

BUILDING BUREAU / ELECTRONICALLY REVIEWED BY: STEVEN MA, PE, CASp

THIS SET OF THE PLANS AND SPECIFICATIONS MUST BE KEPT ON THE JOB SITE AT ALL TIMES IT IS UNLAWFUL TO MAKE ANY CHANGES OR ALTERATIONS ON THE PLANS WITHOUT AUTHORIZATION FROM THE CITY DEPARTMENT. IT IS UNLAWFUL TO OCCUPY THE BUILDING UNTIL A FINAL APPROVAL IS GRANTED BY ALL APPLICABLE DEPARTMENTS.

BUILDING & SAFETY DEPARTMENT
SOLUTIONS INC.

PROJECT ADMINISTERED BY:

CITY OF PERRIS

101 NORTH "D" STREET
PERRIS, CA 92570

PROJECT NAME:

FIRE STATION 105
AND ADMINISTRATION
BUILDING

PROJECT CIP: F077

2495 MURRIETA ROAD
PERRIS, CA 92585

ISSUE INFORMATION:

DATE:	INFORMATION:
11-26-25	95% CD SUBMITTAL
02-05-26	1st PC RESPONSE
02-19-26	2nd PC RESPONSE

SHEET INFORMATION:

STK PROJECT NO.: 365-03-25
SCALE: AS NOTED
DATE: NOVEMBER 2025
PLOT DATE: –
DRAWN BY: JN

SEAL:

LICENSED ARCHITECT
ANTONIO FINALE
No. C31476
REN. 07-31-27
STATE OF CALIFORNIA

SHEET TITLE:

FINISH PLAN

SHEET NO.:

A2.7

J:\365-City of Perris\365-03-25 South Perris Fire Station\Architecture\A2.7 - FINISH PLAN.dwg
04/14/2026 2:18PM

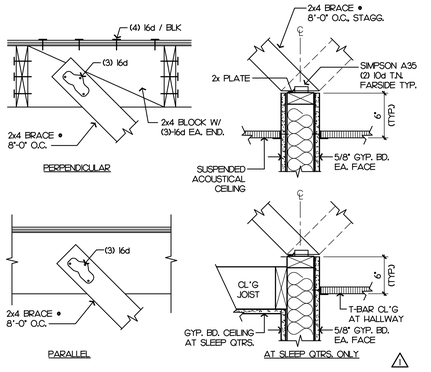

INT. WALL TOP ANCHOR

SCALE: H/2"=1'-0" | 17

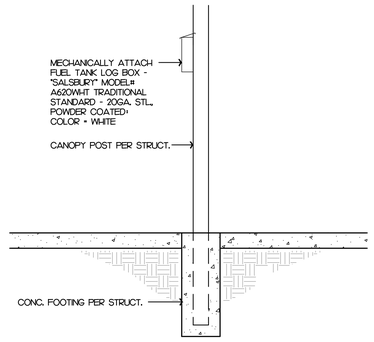

LOG BOX DETAIL

SCALE: 3/4"=1'-0" | 13

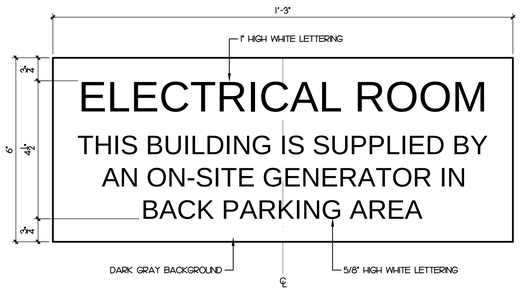

ELECTRICAL ROOM SIGN

SCALE: 6"=1'-0" | 5

KEY NOTE ⑪

1. STANDING SEAM METAL ROOF & COMPONENTS.
2. GYP. BD., 5/8" TYPE "X", OVER 2x WALL/CEILING FRAMING.
3. OVER-HEAD COILING DOOR WITH VISION PANELS - TYP. OF 6.
4. TUBULAR SKYLIGHT - TYP. OF 8. COMPLY WITH ICBO/ICC AC-16. SEE SPECS & INSTALL PER MANUF.'S RECOMMENDATIONS.
5. R-21 WALL INSULATION.
6. R-38 ROOF & ATTIC INSULATION.
7. BUILDING STRUCTURE. SEE STRUCTURAL DRAWINGS.
8. NON-RATED WALL: PROVIDE GYP. BD. UP TO UNDERSIDE OF ROOF.
9. FIBER CEMENT SIDING.
10. PREFINISHED ROOF GUTTER & DOWNSPOUT, DRAIN UNDER SIDEWALK & DAYLIGHT TO STORM DRAIN - SEE CIVIL.
11. MANUFACTURED STONE VENEER.
12. SOUND INSULATION.
13. ACOUSTICAL T-BAR CEILING SYSTEM - SEE RCP, SHEET A2.5A.
14. R-30 SCRIM-FACED ROOF INSULATION AT APPARATUS ONLY.
15. CEMENT PLASTER CEILING.
16. EXPOSED TRUSS/STRUCTURE AS OCCURS - PAINT.
17. WALL MOUNTED METAL/GEARGRID LOCKERS PER SPECIFICATIONS. INSTALL PER MANUF.'S RECOMMENDATIONS. PROVIDE BACKING AND/OR FLOOR MOUNTED METAL STAND AS REQUIRED - FIELD VERIFY.
18. SANITARY WALL PANEL FROM FLOOR TO +8'-0".
19. 6" CONC. CURB & SEALANT - TYP. IN APPARATUS BAY.
20. GYP. BD. CONTROL JOINT.
21. 3/4" PRESSURE TREATED PLYWOOD FLOORING OVER FLOOR/CEILING JOISTS PER STRUCT.
22. TOP SET BASE.
23. P-LAM CUBBIES - SEE INTERIOR ELEVATION / 2I/A5.I.
24. CEMENT PLASTER OVER FOAM TRIM.
25. MANUFACTURED STONE VENEER OVER 2x FURRED WALL.

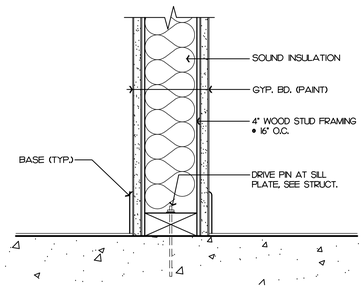

INT. WALL BOTTOM ANCHOR

SCALE: 3"=1'-0" | 18

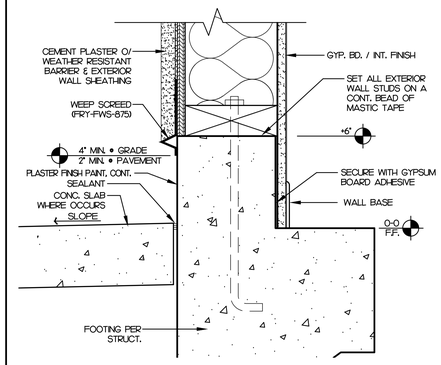

EXTERIOR WALL FOOTING

SCALE: 3"=1'-0" | 14

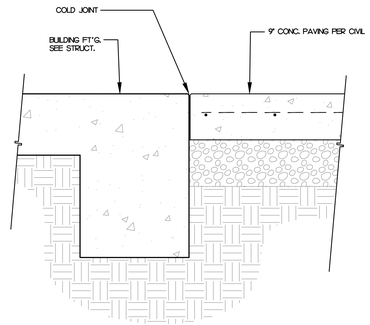

COLD JOINT DETAIL

SCALE: 1"=1'-0" | 10

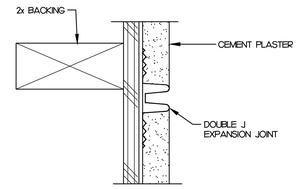

PLASTER CONTROL JOINT

SCALE: 6"=1'-0" | 6

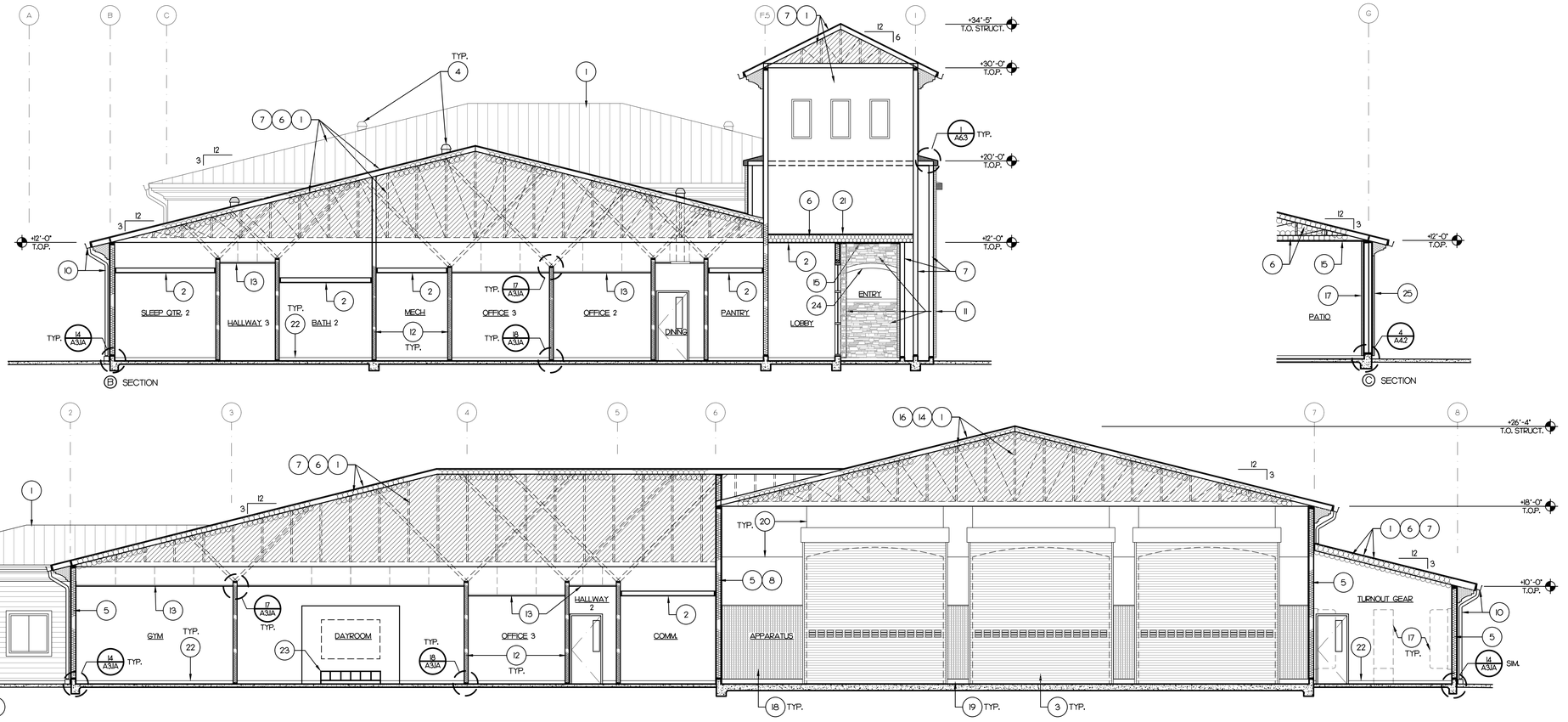

SECTIONS - FIRE STATION

SCALE: 3/16"=1'-0" | 4

STK
42095 ZEVO DR., TEMECULA, CALIFORNIA 92590-3780
Phone: 951.296.9110 Fax: 951.296.6079 Email: stk@stkinc.com

CONSULTANT:

REVIEWED FOR CODE COMPLIANCE

THESE PLANS AND DOCUMENTS HAVE BEEN REVIEWED AND FOUND TO BE IN COMPLIANCE WITH THE CODES AND ORDINANCES IN EFFECT AT THE JURISDICTION. ISSUANCE OF A PERMIT IS RECOMMENDED, SUBJECT TO APPROVAL BY OTHER DEPARTMENTS AND ANY NOTED CONDITIONS. THE ISSUANCE OF A PERMIT BASED ON THESE PLANS AND DOCUMENTS, OR APPROVAL OF ANY VIOLATIONS OF APPLICABLE CODES AND STANDARDS, NOR RELIEVE THE OWNER, DESIGN PROFESSIONAL OF RECORD, OR CONTRACTOR OF RESPONSIBILITY FOR COMPLIANCE WITH APPLICABLE CODES AND STANDARDS. THIS DOCUMENTS DOES NOT AUTHORIZE CONSTRUCTION SUSPENDED IN VIOLATION OF ANY FEDERAL, STATE OR LOCAL REGULATIONS.
BUILDING BUREAU / ELECTRONIC
REVIEWED BY: STEVEN M. PS, CBO
DATE: 02-19-26
THIS SET OF THE PLANS AND SPECIFICATIONS MUST BE KEPT ON THE JOB SITE AT ALL TIMES IT IS UNLAWFUL TO MAKE ANY CHANGES OR ALTERATIONS ON THE WITHOUT AUTHORIZATION FROM THE CITY DEPARTMENT. PERMITTEE SHALL KEEP ONE COPY OF PLANS ON JOB SITE AT ALL TIMES. ISSUANCE OF A PERMIT BASED ON THESE PLANS, SPECIFICATIONS AND OTHER DATA SHALL NOT PREVENT THE CODE OFFICIAL FROM REQUIRING CORRECTION OF ERRORS IN THE PLANS, SPECIFICATIONS AND OTHER DATA. ADDITION OR ALTERATION OF APPROVED PLANS IS NOT PERMITTED WITHOUT APPROVAL FROM THE BUILDING OFFICIAL. ALL WORK SHALL CONFORM TO APPROVED PLANS UNLESS AS NOTED OTHERWISE. ALL WORK SHALL COMPLY WITH ALL APPLICABLE CODES AND ORDINANCES. THE APPROVAL OF THESE PLANS SHALL NOT BE INTERPRETED TO BE A PERMIT OR AN APPROVAL OF ANY VIOLATION OF ANY CODES OR ORDINANCES. NEITHER THE PLAN REVIEW NOR APPROVAL SHALL BE CONSTRUED TO BE AN APPROVAL OF A VIOLATION OF THE PROVISIONS OF THE CODE OR ORDINANCES OF THE JURISDICTION. PERMITS PRESUMING TO GIVE AUTHORITY TO VIOLATE OR CANCEL THE PROVISIONS OF THE CODE OR ORDINANCES OF THE JURISDICTION SHALL NOT BE VALID. THE ISSUANCE OF A PERMIT BASED ON PLANS, SPECIFICATIONS AND OTHER DATA SHALL NOT PREVENT THE BUILDING OFFICIAL FROM THEREAFTER REQUIRING CORRECTION OF ERRORS IN THE PLANS, SPECIFICATIONS AND OTHER DATA OR FROM PREVENTING BUILDING OPERATIONS BEING CARRIED ON THEREUNDER WHEN IN VIOLATION OF THIS CODE OR ORDINANCES OF THE JURISDICTION.
STK ARCHITECTURE SOLUTIONS INC.

PROJECT ADMINISTERED BY:
CITY OF PERRIS

101 NORTH "D" STREET
PERRIS, CA 92570

PROJECT NAME:
FIRE STATION 105 AND ADMINISTRATION BUILDING

PROJECT CIP: F077

2495 MURRIETA ROAD
PERRIS, CA 92585

ISSUE INFORMATION:

DATE:	INFORMATION:
11-26-25	95% CD SUBMITTAL
02-05-26	1 1st PC RESPONSE
02-19-26	2 2nd PC RESPONSE

SHEET INFORMATION:

STK PROJECT NO.: 365-03-25
SCALE: AS NOTED
DATE: NOVEMBER 2025
PLOT DATE: –
DRAWN BY: JN

SEAL:

LICENSED ARCHITECT ANTONIO FINALDI No. C31476 REN. 07-31-27 STATE OF CALIFORNIA

SHEET TITLE:
BUILDING SECTIONS - FIRE STATION

SHEET NO.:
A3.1A

J:\365-City of Perris\365-03-25 South Perris Fire Station\Architects\A3.1-A4.2-A - FS SECTIONS & EXT. ELEVATIONS.dwg
04/14/2026 2:20PM

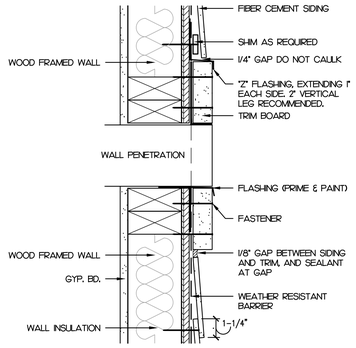

WALL LOUVER

SCALE: 3"=1'-0" | 17

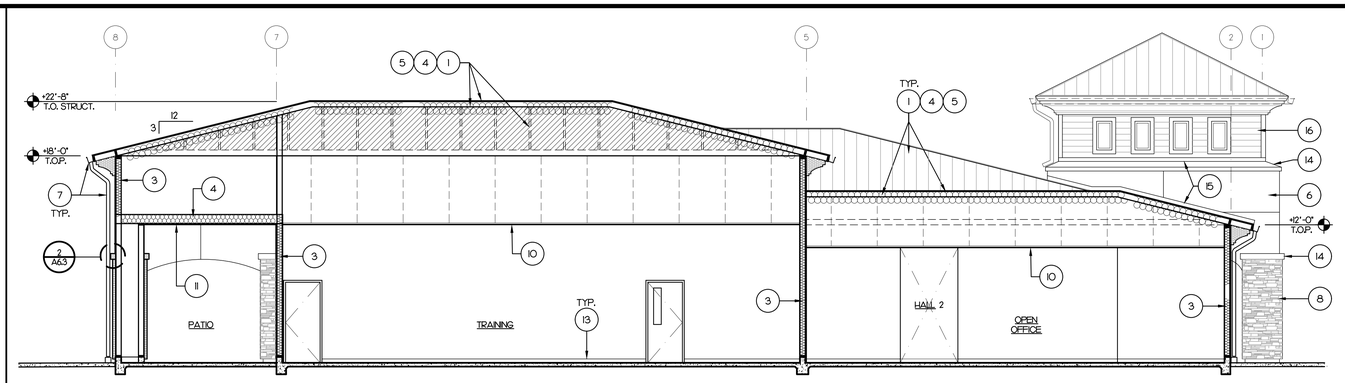

SECTION

SCALE: 3/16"=1'-0" | 5

KEY NOTE

1. STANDING SEAM METAL ROOF & COMPONENTS.
2. GYP. BD., 5/8" TYPE "X", OVER 2x WALL/CEILING FRAMING.
3. R-21 WALL INSULATION.
4. R-38 ROOF & ATTIC INSULATION.
5. BUILDING STRUCTURE. SEE STRUCTURAL DRAWINGS.
6. CEMENT PLASTER.
7. SHEET METAL GUTTER AND DOWNSPOUT.
8. MANUFACTURED STONE VENEER.
9. SOUND INSULATION.
10. ACOUSTICAL T-BAR CEILING SYSTEM - SEE RCP, SHEET A2.5B.
11. CEMENT PLASTER CEILING.
12. 3/4" PRESSURE TREATED PLYWOOD FLOORING OVER FLOOR/CEILING JOISTS PER STRUCT.
13. TOP SET BASE.
14. CEMENT PLASTER OVER FOAM TRIM.
15. SHEET METAL FLASHING - PAINT.
16. FIBER CEMENT SIDING - PAINT. INSTALL PER MANUFACTURER'S RECOMMENDATIONS.

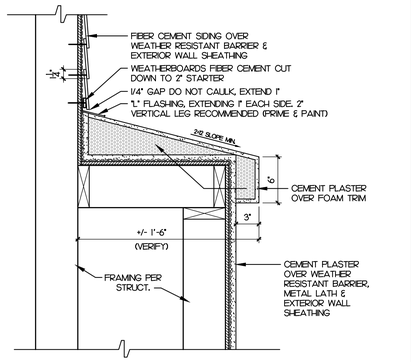

DETAIL

SCALE: H/2"=1'-0" | 18

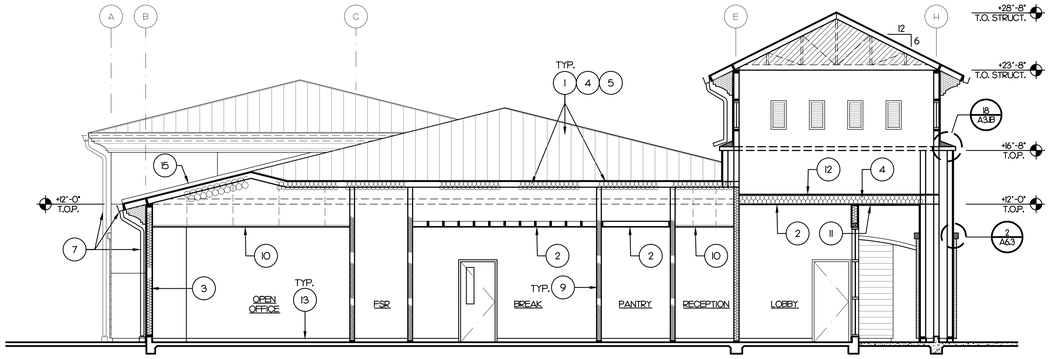

SECTION

SCALE: 3/16"=1'-0" | 6

NOT USED

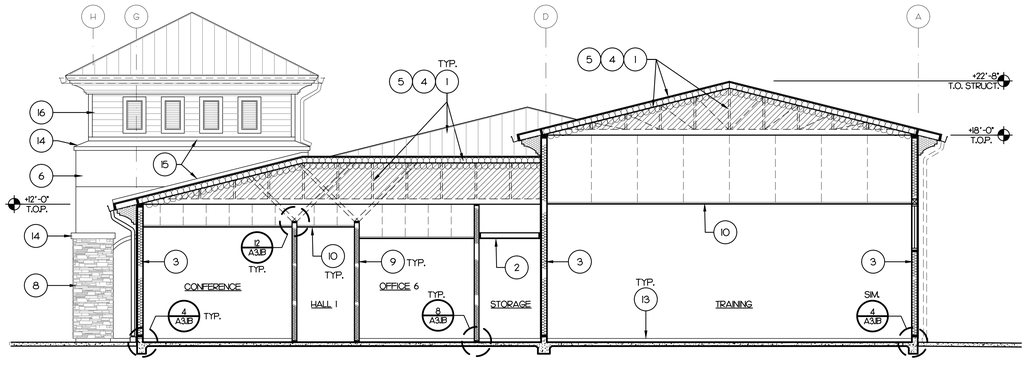

SECTION

SCALE: 3/16"=1'-0" | 7

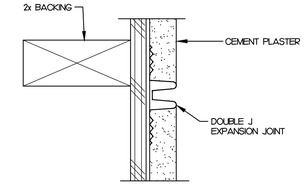

PLASTER CONTROL JOINT

SCALE: 6"=1'-0" | 3

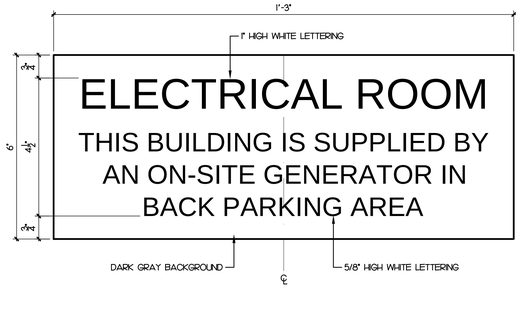

ELECTRICAL ROOM SIGN

SCALE: 6"=1'-0" | 16

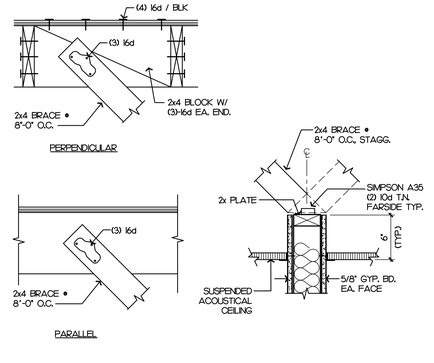

INT. WALL TOP ANCHOR

SCALE: H/2"=1'-0" | 12

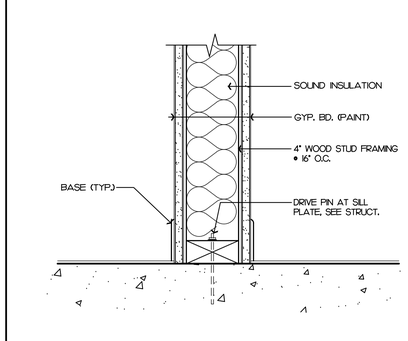

INT. WALL BOTTOM ANCHOR

SCALE: 3"=1'-0" | 8

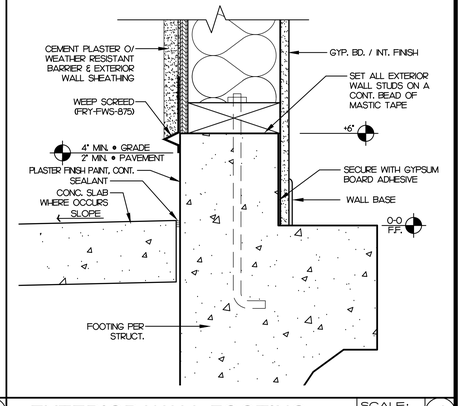

EXTERIOR WALL FOOTING

SCALE: 3"=1'-0" | 4

STK
42095 ZEVO DR., TEMECULA, CALIFORNIA 92590-3780
Phone: 951.296.9110 Fax: 951.296.6079 Email: stk@stkinc.com

CONSULTANT:

REVIEWED FOR CODE COMPLIANCE

THESE PLANS AND DOCUMENTS HAVE BEEN REVIEWED AND FOUND TO BE IN COMPLIANCE WITH THE CODES AND ORDINANCES OF THE JURISDICTION. ISSUANCE OF A PERMIT IS RECOMMENDED, SUBJECT TO APPROVAL BY OTHER DEPARTMENTS AND ANY NOTED CONDITIONS. THE ISSUANCE OF A PERMIT BASED ON THESE PLANS AND DOCUMENTS, OR APPROVAL OF ANY VIOLATIONS, APPEALS, CASES AND STANDARDS, NOR RELIEVE THE OWNER, DESIGN PROFESSIONAL OF RECORD, OR CONTRACTOR OF RESPONSIBILITY FOR COMPLIANCE WITH THE APPLICABLE CODES. THESE DOCUMENTS DOES NOT AUTHORIZE CONSTRUCTION DISCREPANCIES IN VIOLATION OF ANY FEDERAL, STATE OR LOCAL REGULATIONS.

BUILDING BUREAU SOLUTIONS, INC.
REVIEWED BY: STEVEN M. PEREZ

THIS SET OF THE PLANS AND SPECIFICATIONS MUST BE KEPT ON THE JOB SITE AT ALL TIMES IT IS UNLAWFUL TO MAKE ANY CHANGES OR ALTERATIONS ON THE PLANS WITHOUT AUTHORIZATION FROM THE CITY DEPARTMENT. FOR ERRORS AND OMISSIONS IN THESE PLANS, THE CONTRACTOR IS NOT RELIEVED OF THE RESPONSIBILITY OF CONFORMING TO ALL APPLICABLE CODES, ORDINANCES AND REGULATIONS. BUILDING BUREAU SOLUTIONS, INC. IS NOT RESPONSIBLE FOR ANY CONSTRUCTION MEANS, METHODS, TECHNIQUES, SEQUENCES OR PROCEDURES, OR FOR SAFETY PRECAUTIONS AND PROGRAMS IN CONNECTION WITH THE WORK, NOR FOR ANY CONTRACTOR'S FAILURE TO CARRY OUT THE WORK IN ACCORDANCE WITH THE CONTRACT DOCUMENTS. BUILDING BUREAU SOLUTIONS, INC. IS NOT RESPONSIBLE FOR THE ACTS OR OMISSIONS OF THE CONTRACTOR, SUBCONTRACTOR, OR ANY OF THEIR AGENTS OR EMPLOYEES, OR ANY OTHER PERSONS PERFORMING ANY OF THE WORK.

PROJECT ADMINISTERED BY:
CITY OF PERRIS

101 NORTH "D" STREET
PERRIS, CA 92570

PROJECT NAME:
FIRE STATION 105 AND ADMINISTRATION BUILDING

PROJECT CIP: F077

2495 MURRIETA ROAD
PERRIS, CA 92585

ISSUE INFORMATION:

DATE:	INFORMATION:
11-26-25	95% CD SUBMITTAL
02-05-26	1 1st PC RESPONSE
02-19-26	2 2nd PC RESPONSE

SHEET INFORMATION:

STK PROJECT NO.: 365-03-25
SCALE: AS NOTED
DATE: NOVEMBER 2025
PLOT DATE: –
DRAWN BY: JN

SEAL:

LICENSED ARCHITECT ANTONIO FINATO No. C31478 REN. 07-31-27 STATE OF CALIFORNIA

SHEET TITLE:
BUILDING SECTIONS - ADMIN. BLDG. (ADD. ALT. #1)

SHEET NO.:
A3.1B

J:\365-City of Perris\365-03-25 South Perris Fire Station\Architect\ArchA3.1B-A3.2B - ADMIN BLDG SECTIONS & EXT. ELEVATIONS.dwg
04/14/2023 2:19PM

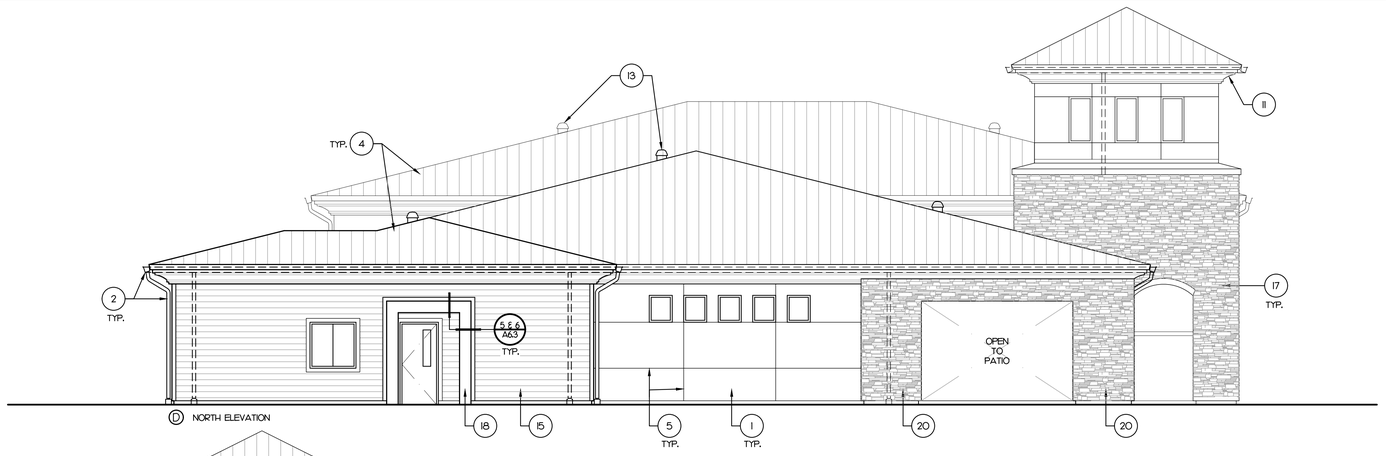

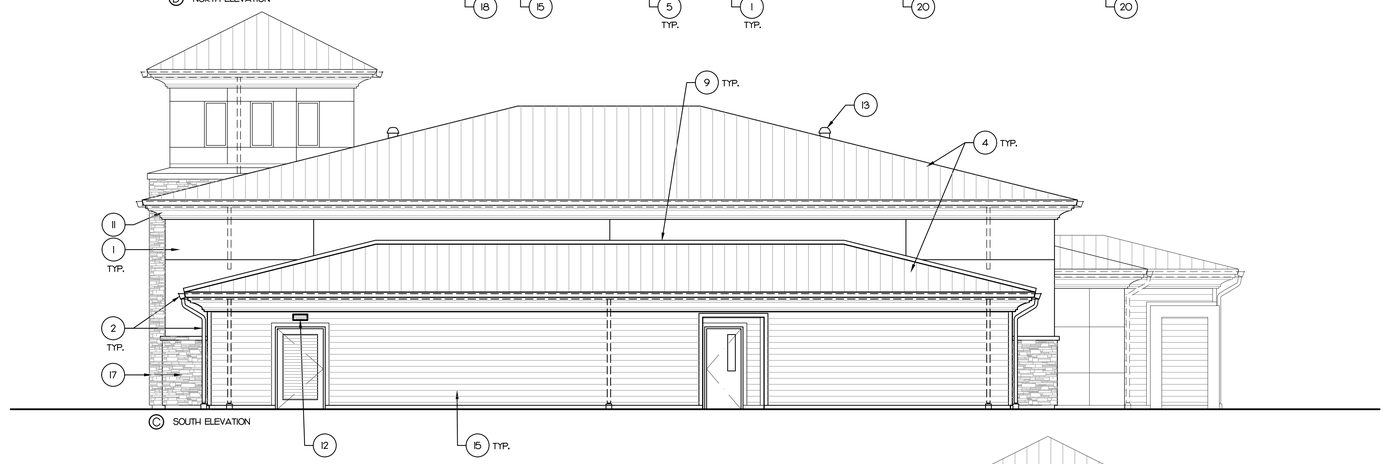

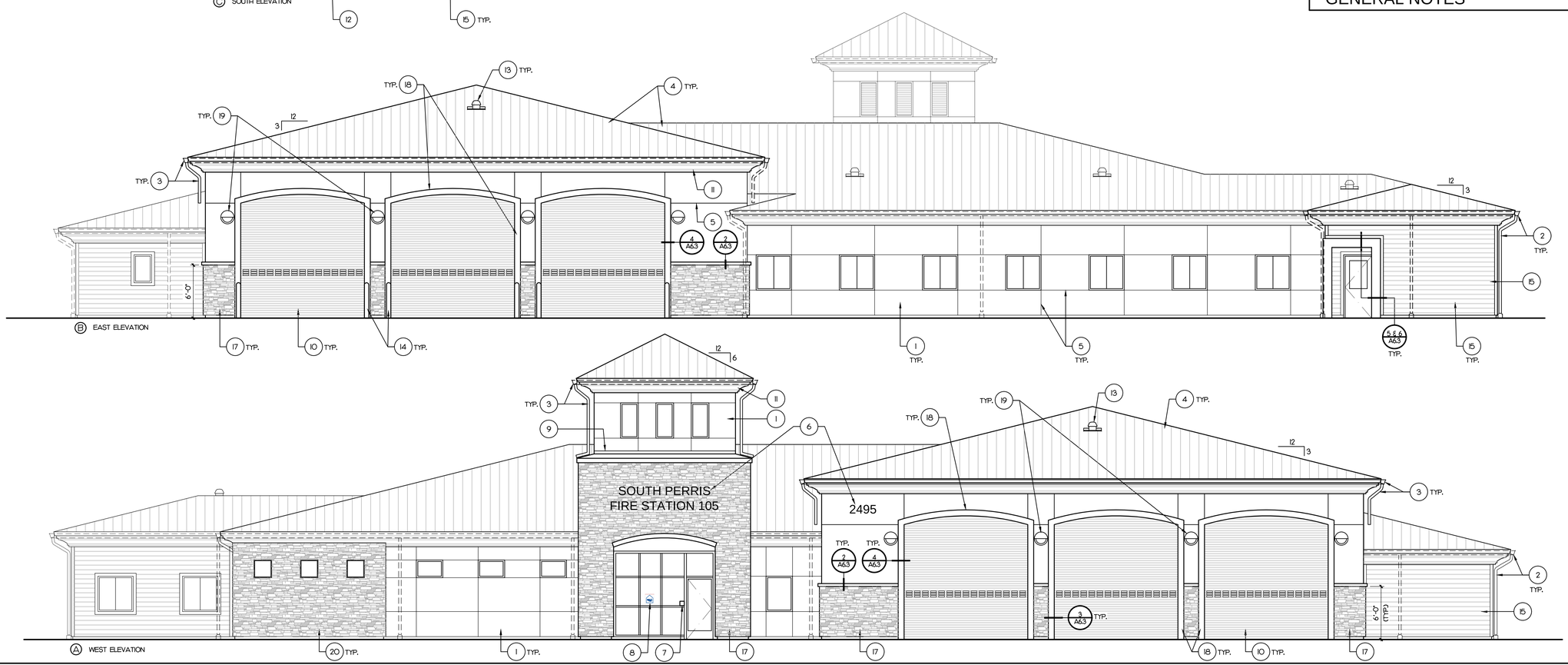

KEY NOTE (11)

1. CEMENT PLASTER.
2. PREFINISHED ROOF GUTTER & DOWNSPOUT, DRAIN UNDER SIDEWALK & DAYLIGHT TO STORM DRAIN - SEE 20/A1.3 & CIVIL.
3. PRE-FINISHED METAL GUTTER & DOWNSPOUT - SPILL ONTO LOWER ROOF.
4. STANDING SEAM METAL ROOF.
5. CEMENT PLASTER CONTROL JOINT - SEE 6/A3.1A.
6. 12" CAST NUMBERS & LETTERS WITH A 1" STROKE. FOR MOUNTING, SEE 1/A6.1. COORDINATE WITH OWNER PRIOR TO INSTALLATION FOR APPROVED NUMBERS & LETTERS. PROVIDE ILLUMINATION AS REQUIRED - SEE ELECT.
7. INTERNATIONAL SYMBOL OF ACCESSIBILITY - SEE 8/A2.4.
8. BABY SAFE SURRENDER SIGN - SEE 16/A6.1.
9. SHEET METAL FLASHING - PAINT.
10. OVER-HEAD COILING DOOR W/ VISION PANELS, POWDER COATED - TYP. OF 6.
11. EAVE/FOAM CORNICE - INSTALL PER MANUF.'S RECOMMENDATIONS & SEE SPECIFICATIONS.
12. 6"x5' SIGN THAT READS "ELECTRICAL ROOM" WITH 3" x 3/4" STROKE LETTERS WITH CONTRASTING WHITE REFLECTIVE BACKGROUND. SIGN SHALL ALSO STATE: "THIS BUILDING IS SUPPLIED BY AN ON-SITE GENERATOR IN THE BACK PARKING AREA" - SEE 5/A3.1A.
13. TUBULAR SKYLIGHT & COMPONENTS - TYP. OF 8.
14. STEEL PIPE BOLLARDS, TYP. OF 6. PAINT O.S.H.A. YELLOW - SEE 12/A1.2.
15. FIBER CEMENT SIDING - PAINT. INSTALL PER MANUFACTURER'S RECOMMENDATIONS.
16. PAINT ALL EXPOSED STRUCTURE - TYP.
17. MANUFACTURED STONE VENEER.
18. CEMENT PLASTER OVER FOAM TRIM.
19. LIGHT FIXTURE - SEE ELECT.
20. MANUFACTURED STONE VENEER OVER 2x FURRED WALL.

SEE SHEET A2.7 FOR INTERIOR & EXTERIOR FINISHES.

GENERAL NOTES

STK
SAN DIEGO | TEMECULA

42095 ZEVO DR., TEMECULA, CALIFORNIA 92590-3780
Phone: 951.296.9110 Fax: 951.296.6079 Email: stk@stkinc.com

CONSULTANT:

REVIEWED FOR CODE COMPLIANCE

THESE PLANS AND DOCUMENTS HAVE BEEN REVIEWED AND FOUND TO BE IN SUBSTANTIAL COMPLIANCE WITH THE APPLICABLE CODES FOR PERMIT ISSUANCE/ISSUANCE OF A PERMIT/RECOMMENDATION, SUBJECT TO APPROVAL BY OTHER DEPARTMENTS AND ANY NOTED CONDITIONS. THE REVIEW AND APPROVAL OF THESE PLANS AND DOCUMENTS DOES NOT AUTHORIZE APPROVAL OF ANY VIOLATIONS OF APPLICABLE CODES AND STANDARDS, NOR RELIEVE THE OWNER, DESIGN PROFESSIONAL OF RECORD, OR CONTRACTOR OF RESPONSIBILITY FOR COMPLYING WITH APPLICABLE CODES AND STANDARDS. THE DOCUMENTS DOES NOT AUTHORIZE CONSTRUCTION THAT IS REJECTED IN VIOLATION OF ANY FEDERAL, STATE OR LOCAL REGULATIONS.

BUILDING BUREAU ACCEPTANCE
REVIEWED BY: STEVEN MA, PE, CASp

THIS SET OF THE PLANS AND SPECIFICATIONS MUST BE KEPT ON THE JOB SITE AT ALL TIMES IT IS UNLAWFUL TO MAKE ANY CHANGES OR ALTERATIONS ON THE SAME, OR TO ASSUME THE ARCHITECT'S RESPONSIBILITY. CONTRACTOR SHALL VERIFY AND COORDINATE ALL WORK WITH THAT OF ALL OTHER TRADES AND THE ARCHITECT FINDS ANY DISCREPANCY BEFORE PROCEEDING WITH THE WORK. THE CONTRACTOR SHALL BE RESPONSIBLE FOR ALL DIMENSIONS AND CONDITIONS ON THE JOB SITE, AND THIS OFFICE SHALL BE INFORMED OF ANY VARIATIONS FROM THE DIMENSIONS AND CONDITIONS SHOWN BY THESE DRAWINGS. ANY NOTIFICATION SHALL BE MADE PRIOR TO PROCEEDING WITH THE WORK INVOLVED. ALL DIMENSIONS MUST BE VERIFIED ON THE BUILDING. FIGURED DIMENSIONS TAKE PRECEDENCE OVER SCALED DIMENSIONS. DETAILS ARE INTENDED TO BE CORRECT AND COMPLETE IN EVERY RESPECT. ALL DETAILS NOT SPECIFICALLY MARKED OR NOTED SHALL BE THE SAME AS SIMILAR PARTS SHOWN. ALL WORK SHALL BE INSTALLED IN A WORKMANLIKE MANNER. ALL MATERIALS SHALL BE NEW AND SHALL BE APPLIED, INSTALLED, CONNECTED, ERECTED, CLEANED AND CONDITIONED AS REQUIRED BY THE MANUFACTURER'S DIRECTIONS, UNLESS OTHERWISE SPECIFIED IN THESE DRAWINGS.

© COPYRIGHT STK ARCHITECTURAL SOLUTIONS INC.

PROJECT ADMINISTERED BY:
CITY OF PERRIS

101 NORTH "D" STREET
PERRIS, CA 92570

PROJECT NAME:
FIRE STATION 105
AND ADMINISTRATION
BUILDING

PROJECT CIP: F077

2495 MURRIETA ROAD
PERRIS, CA 92585

ISSUE INFORMATION:

DATE:	INFORMATION:
11-26-25	95% CD SUBMITTAL
02-05-26	1 1st PC RESPONSE
02-19-26	2 2nd PC RESPONSE
02-22-26	3 3rd PC RESPONSE
04-27-26	4 4th PC RESPONSE

SHEET INFORMATION:

STK PROJECT NO.:	365-03-25
SCALE:	AS NOTED
DATE:	NOVEMBER 2025
PLOT DATE:	–
DRAWN BY:	JN

SEAL:

LICENSED ARCHITECT
ANTONIO FINLEY
No. C31476
REN. 07-31-27
STATE OF CALIFORNIA

SHEET TITLE:
EXTERIOR ELEVATIONS - FIRE STATION

SHEET NO.:
A3.2A

EXTERIOR ELEVATIONS - FIRE STATION

SCALE: 3/16"=1'-0"

4

J:\365-City of Perris\365-03-25 South Perris Fire Station\Architecture\SA\3.1-A3.2A - FS SECTIONS & EXT. ELEVATIONS.dwg
05/07/2026 9:43 AM

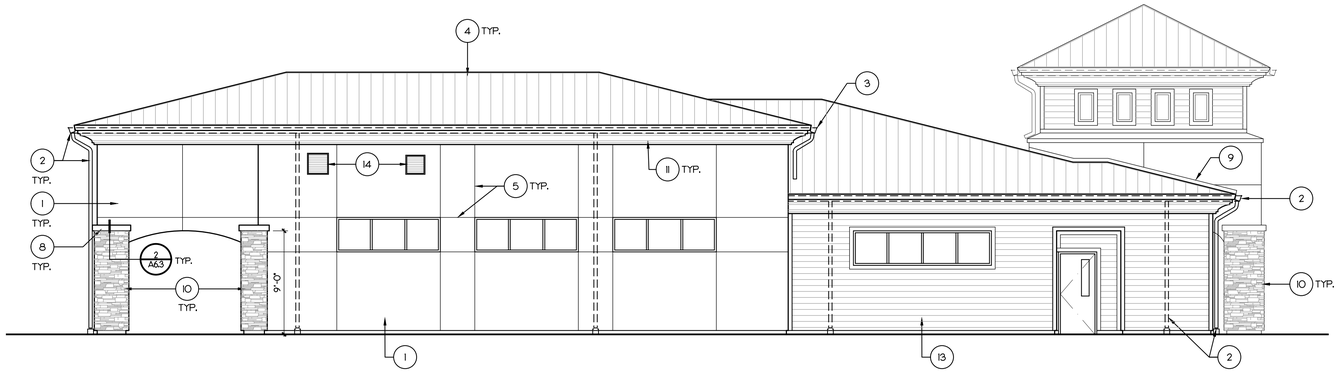

NORTH ELEVATION

SCALE: 3/16"=1'-0" 5

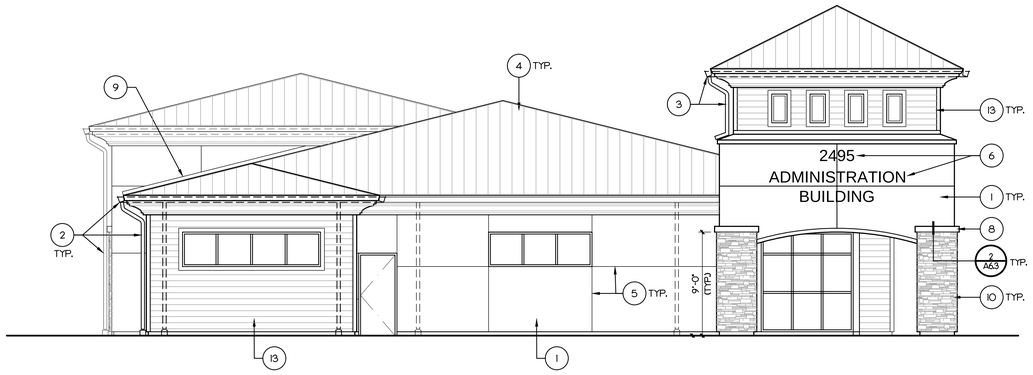

WEST ELEVATION

SCALE: 3/16"=1'-0" 6

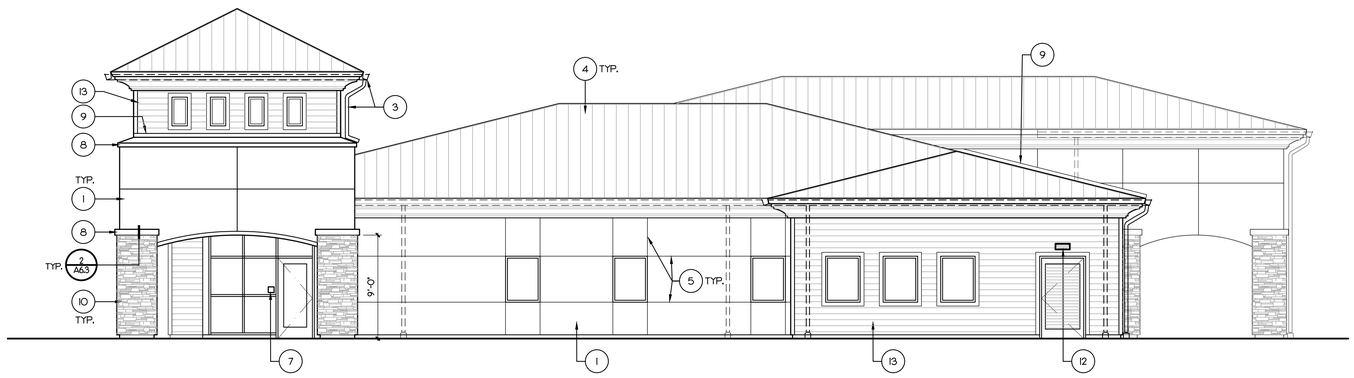

SOUTH ELEVATION

SCALE: 3/16"=1'-0" 7

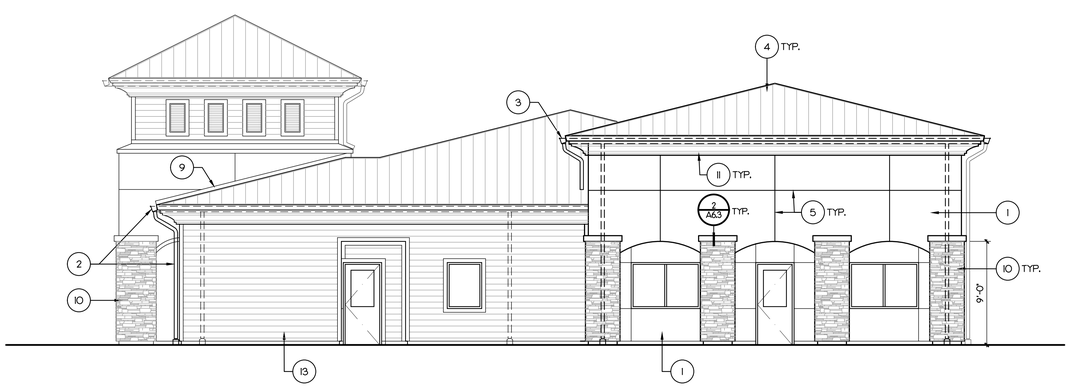

EAST ELEVATION

SCALE: 3/16"=1'-0" 8

KEY NOTE (#)

1. CEMENT PLASTER.
2. PREFINISHED ROOF GUTTER & DOWNSPOUT, DRAIN UNDER SIDEWALK & DAYLIGHT TO STORM DRAIN - SEE 20/A4.3 & CIVIL.
3. PRE-FINISHED METAL GUTTER & DOWNSPOUT - SPILL ONTO LOWER ROOF.
4. STANDING SEAM METAL ROOF.
5. CEMENT PLASTER CONTROL JOINT - SEE 3/A3.1B.
6. 12" CAST NUMBERS & LETTERS WITH A 2" STROKE. FOR MOUNTING, SEE 1/A6.1 COORDINATE WITH OWNER PRIOR TO INSTALLATION FOR APPROVED NUMBERS & LETTERS. PROVIDE ILLUMINATION AS REQUIRED - SEE ELECT.
7. INTERNATIONAL SYMBOL OF ACCESSIBILITY - SEE 8/A2.4.
8. CEMENT PLASTER OVER FOAM TRIM.
9. SHEET METAL FLASHING - PAINT.
10. MANUFACTURED STONE VENEER.
11. EAVE/FOAM CORNICE - INSTALL PER MANUF.'S RECOMMENDATIONS & SEE SPECIFICATIONS.
12. 6"X5' SIGN THAT READS "ELECTRICAL ROOM" WITH 3" x 3/4" STROKE LETTERS WITH CONTRASTING WHITE REFLECTIVE BACKGROUND. SIGN SHALL ALSO STATE: "THIS BUILDING IS SUPPLIED BY AN ON-SITE GENERATOR IN THE BACK PARKING AREA" - SEE 16/A3.1B.
13. FIBER CEMENT SIDING - PAINT. INSTALL PER MANUFACTURER'S RECOMMENDATIONS.
14. GALV. SHEET METAL LOUVER - SEE MECH.

GENERAL NOTES

SEE SHEET A2.7 FOR INTERIOR & EXTERIOR FINISHES.

STK
ARCHITECTURE + PLANNING, INC.
42095 ZEVO DR., TEMECULA, CALIFORNIA 92590-3780
Phone: 951.296.9110 Fax: 951.296.6079 Email: stk@stkinc.com

CONSULTANT:

REVIEWED FOR CODE COMPLIANCE

THESE PLANS AND DOCUMENTS HAVE BEEN REVIEWED AND FOUND TO BE IN COMPLIANCE WITH THE CODES AND ORDINANCES OF THE CITY OF PERRIS JURISDICTION. ISSUANCE OF A PERMIT IS RECOMMENDED, SUBJECT TO APPROVAL BY OTHER DEPARTMENTS AND ANY NOTED CONDITIONS. THE APPROVAL OF THESE PLANS AND DOCUMENTS DOES NOT AUTHORIZE THE APPROVAL OF ANY VIOLATIONS OF APPLICABLE CODES AND STANDARDS, NOR RELIEVE THE OWNER, DESIGN PROFESSIONAL OF RECORD, OR CONTRACTOR OF RESPONSIBILITY FOR COMPLIANCE WITH APPLICABLE CODES AND STANDARDS. THE DOCUMENTS DOES NOT AUTHORIZE CONSTRUCTION CONSTRUCTED IN VIOLATION OF ANY FEDERAL, STATE OR LOCAL REGULATIONS.

BUILDING BUREAU ACCEPTANCE
REVIEWED BY: STEVEN MA, PE, CBO

THIS SET OF THE PLANS AND SPECIFICATIONS MUST BE KEPT ON THE JOB SITE AT ALL TIMES DURING CONSTRUCTION. ANY CHANGES, ADDITIONS OR ALTERATIONS WITHOUT APPROVAL IS STRICTLY PROHIBITED. THE CONTRACTOR IS RESPONSIBLE FOR ALL CONFLICTS IN THE PLANS AND SPECIFICATIONS. IT SHALL BE THE CONTRACTOR'S RESPONSIBILITY TO NOTIFY THE ARCHITECT AND ENGINEER OF RECORD PRIOR TO CONSTRUCTION IN THE AREA OF CONFLICT. NO EXTRA COMPENSATION WILL BE ALLOWED FOR CORRECTIONS THAT MUST BE MADE AND EXPENSE INCURRED DUE TO FAILURE TO DISCOVER CONFLICTS BEFORE CONSTRUCTION. ANY DEVIATION FROM THE APPROVED PLANS MUST BE APPROVED BY ALL APPLICABLE DEPARTMENTS.

STRUCTURAL TECHNICAL SOLUTIONS INC.

PROJECT ADMINISTERED BY:
CITY OF PERRIS

101 NORTH "D" STREET
PERRIS, CA 92570

PROJECT NAME:
FIRE STATION 105
AND ADMINISTRATION
BUILDING

PROJECT CIP: F077

2495 MURRIETA ROAD
PERRIS, CA 92585

ISSUE INFORMATION:

DATE:	INFORMATION:
11-26-25	95% CD SUBMITTAL
02-05-26	1 1st PC RESPONSE
02-19-26	2 2nd PC RESPONSE
02-22-26	3 3rd PC RESPONSE
04-27-26	4 4th PC RESPONSE

SHEET INFORMATION:

STK PROJECT NO.:	365-03-25
SCALE:	AS NOTED
DATE:	NOVEMBER 2025
PLOT DATE:	–
DRAWN BY:	JN

SEAL:

LICENSED ARCHITECT
ANTONIO FINALDI
No. C31476
RENEWAL 07-31-27
STATE OF CALIFORNIA

SHEET TITLE:
EXTERIOR ELEVATIONS - ADMIN. BLDG.
(ADD. ALT. #1)

SHEET NO.:
A3.2B

J:\365-City of Perris\365-03-25 South Perris Fire Station\Architects\A3.1-3.A3.2B - ADMIN BLDG SECTIONS & EXT. ELEVATIONS.dwg
05/6/2026 2:18PM

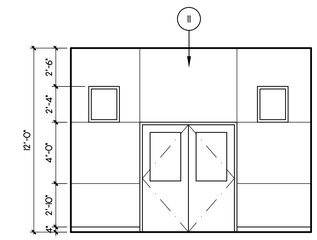

A

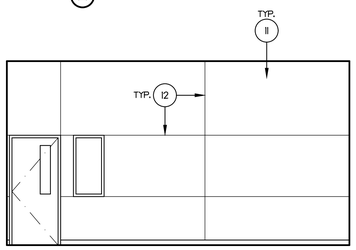

B

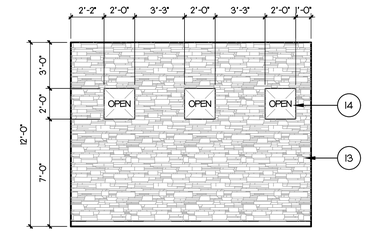

C

D

INTERIOR ELEVATION - PATIO

SCALE: 1/4"=1'-0" | 19

SIGNS: 4-INCH x 8-INCH METAL, RED BACKGROUND WITH 1-INCH WHITE LETTERS (CFC 509.1), TYP. (MECHANICALLY ATTACH TO DOOR)

SIGNS

SCALE: N.T.S. | 20

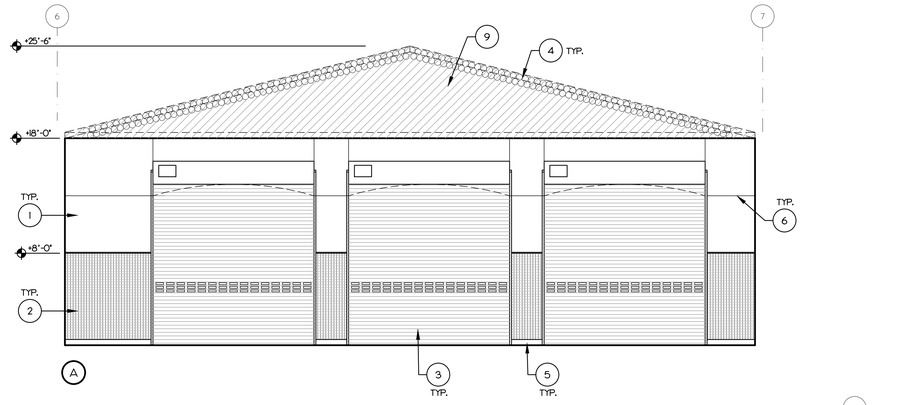

INTERIOR ELEVATIONS - APPARATUS

SCALE: 3/16"=1'-0" | 8

KEY NOTE

1. GYP. BD. - PAINT.
2. SANITARY WALL PANEL.
3. OVER-HEAD COILING DOOR & COMPONENTS WITH VISION PANELS - TYP. OF 6.
4. R-30 SCRIM-FACED ROOF INSULATION.
5. 6" CONC. CURB & SEALANT - TYP.
6. GYP. BD. CONTROL JOINT - SEE 6/A6.1.
7. PROVIDE TWO SEPARATE SIGNS (PER CFC 509.1) THAT READS: "FIRE ALARM PANEL" & "FIRE SPRINKLER RISER" ON RED BACKGROUND & WHITE LETTERS - FIELD VERIFY. SEE 20/A4.2.
8. SEMI-RECESSED FIRE EXTINGUISHER & CABINET - SEE 7/A6.2.
9. BUILDING STRUCTURE/EXPOSED TRUSSES (PAINT) - SEE STRUCT. DRAWINGS.
10. CORNER GUARDS (STAINLESS STEEL). - TYP. OF 3.
11. CEMENT PLASTER.
12. CEMENT PLASTER CONTROL JOINT - SEE 6/A3.1.
13. MANUFACTURED STONE VENEER.
14. WALL OPENING, TYP. OF 3 - SEE WINDOW SCHEDULE F/A2.3A.

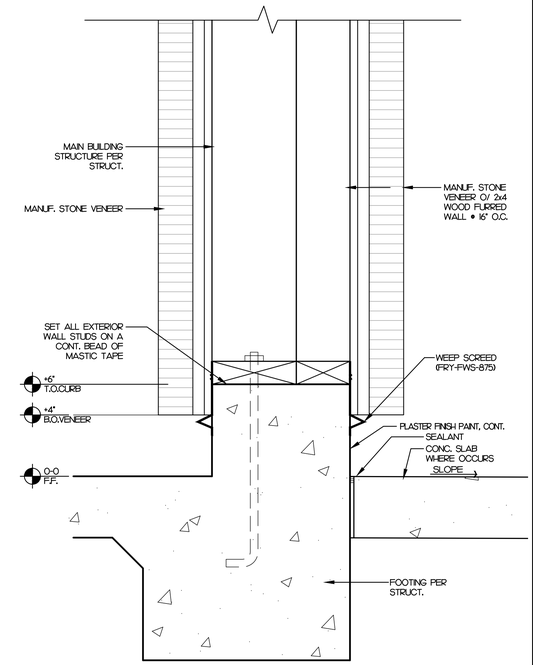

FOOTING DETAIL @ PATIO

SCALE: 3"=1'-0" | 4

STK
ARCHITECTURE INC.
42095 ZEVO DR., TEMECULA, CALIFORNIA 92590-3780
Phone: 951.296.9110 Fax: 951.296.6079 Email: stk@stkinc.com

CONSULTANT:

REVIEWED FOR CODE COMPLIANCE

THESE PLANS AND DOCUMENTS HAVE BEEN REVIEWED AND FOUND TO BE IN COMPLIANCE WITH THE CODES ADOPTED BY THE CITY OF PERRIS JURISDICTION. ISSUANCE OF A PERMIT IS RECOMMENDED, SUBJECT TO APPROVAL BY OTHER DEPARTMENTS AND ANY NOTED CONDITIONS. THE ISSUANCE OF A PERMIT BASED ON THESE PLANS AND DOCUMENTS, OR APPROVAL OF ANY VIOLATIONS OF REGULATIONS AND STANDARDS, NOR RELIEVE THE OWNER, DESIGN PROFESSIONAL OF RECORD, OR CONTRACTOR OF RESPONSIBILITY FOR COMPLIANCE WITH THE APPROVED PLANS AND DOCUMENTS DOES NOT AUTHORIZE CONSTRUCTION TO BE EXECUTED IN VIOLATION OF ANY FEDERAL, STATE OR LOCAL REGULATIONS.

BUILDING BUREAU SUPERVISOR
REVIEWED BY: STEVEN MA, PE, CASp

DATE

THIS SET OF THE PLANS AND SPECIFICATIONS MUST BE KEPT ON THE JOB SITE AT ALL TIMES IT IS UNLAWFUL TO MAKE ANY CHANGES OR ALTERATIONS ON THE PLANS WITHOUT AUTHORIZATION FROM THE CITY DEPARTMENT. THE PERMITTEE HOLDING THIS PERMIT IS RESPONSIBLE FOR ALL CORRECTIONS IN NOT DEPARTMENTS.

ENGINEERED DATA SOLUTIONS INC.

PROJECT ADMINISTERED BY:
CITY OF PERRIS

101 NORTH "D" STREET
PERRIS, CA 92570

PROJECT NAME:
FIRE STATION 105
AND ADMINISTRATION
BUILDING

PROJECT CIP: F077

2495 MURRIETA ROAD
PERRIS, CA 92585

ISSUE INFORMATION:

DATE:	INFORMATION:
11-26-25	95% CD SUBMITTAL
02-05-26	1 1st PC RESPONSE
02-19-26	2 2nd PC RESPONSE

SHEET INFORMATION:

STK PROJECT NO.: 365-03-25
SCALE: AS NOTED
DATE: NOVEMBER 2025
PLOT DATE: –
DRAWN BY: JN

SEAL:

LICENSED ARCHITECT
ANTONIO FINALDI
No. C31476
REN. 07-31-27
STATE OF CALIFORNIA

SHEET TITLE:
INTERIOR
ELEVATIONS -
FIRE STATION

SHEET NO.:
A4.2

J:\365-City of Perris\365-03-25 South Perris Fire Station\Architecture\sheet A 2 - FS INT. ELEVATIONS.dwg
04/14/2026 2:18PM

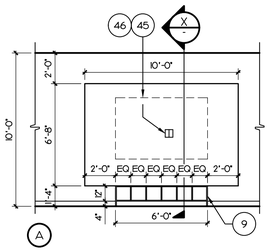

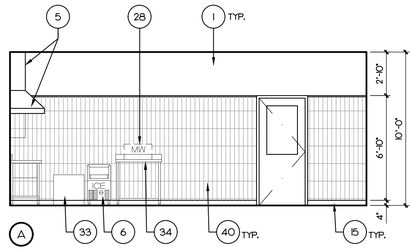

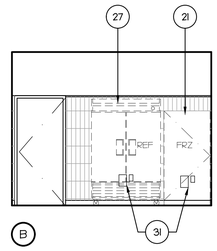

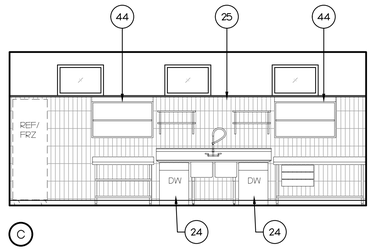

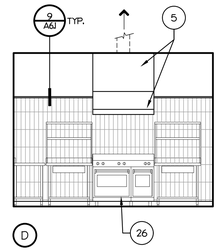

DAYROOM

SCALE: 1/4"=1'-0" — 21

KITCHEN

SCALE: 1/4"=1'-0" — 6

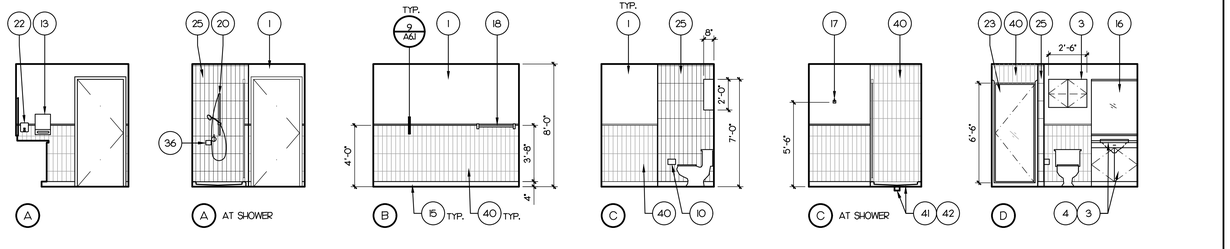

BATH #1 (BATHS #2, #3, #4, #5 & BC'S BATH SIM.)

SCALE: 1/4"=1'-0" — 12

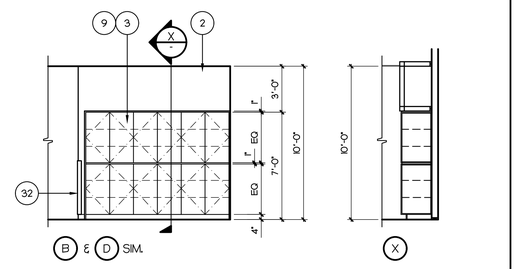

LINEN

SCALE: 1/4"=1'-0" — 7

KEY NOTE

1. GYP. BD.
2. GYP. BD. SOFFIT.
3. PLASTIC LAMINATE CABINETS w/ ADJUSTABLE SHELVES (TYP.).
4. SOLID SURFACE COUNTERTOP w/ 4" INTEGRAL COVE BACKSPLASH. PROVIDE 4" MATCHING END SPLASH AS APPLIES.
5. EXHAUST HOOD, DUCTING & COVER - SEE MECH.
6. ICE MAKER - PROVIDE POWER & WATER CONNECTIONS AS REQUIRED / SEE PLUMB & ELECT.
7. URINAL - SEE PLUMB.
8. EXHAUST DUCT, SEE MECH. DWGS.
9. PROVIDE P-LAM INTERMEDIATE VERTICAL PARTITION BETWEEN EACH CABINET - SEE 10/A6.1
10. TOILET PAPER DISPENSER BY OWNER.
11. GRAB BARS - SEE 5/A6.1
12. INSULATE HOT WATER & DRAIN PIPING.
13. PAPER TOWEL DISPENSER BY OWNER.
14. RECESSED 4" DEEP x 8" WIDE x 10" SHEET METAL BOX W/ 4" SQ. LINT CLEAN OUT DOOR & DRYER EXHAUST OUTLET - PAINT & FIELD VERIFY.
15. 4" TILE COVED BASE.
16. MIRROR.
17. ROBE HOOK.
18. TOWEL BAR.
19. 4" TOP SET BASE.
20. HANDHELD SHOWER HEAD & COMPONENTS - SEE PLUMBING.
21. FREEZER - COORDINATE POWER & WATER CONNECTIONS WITH PLUMB & ELECT.
22. WALL MOUNTED SOAP DISPENSER BY OWNER.
23. TEMPERED GLASS SHOWER DOOR.
24. DISHWASHER MOUNT ON SS TABLE - VERIFY DIMENSIONS.
25. CERAMIC ACCENT TILE (FULL HEIGHT) OVER CEMENT BD.
26. RANGE. VERIFY ROUGH OPENING WITH EQUIPMENT DIMENSIONS.
27. REFRIGERATOR - COORDINATE POWER & WATER CONNECTIONS WITH PLUMB & ELECT.
28. MICROWAVE - PROVIDE POWER AS REQUIRED / SEE ELECT.
29. STAINLESS STEEL RECESSED HOT, COLD & DRAIN - FIELD VERIFY.
30. DUPLEX OUTLET, SEE ELECT.
31. POWER AND WATER OUTLETS. SEE PLUMBING & ELECT.
32. PVC CORNER GUARD.
33. RO SYSTEM.
34. SS TABLE.
35. SANITARY WALL PANEL.
36. RECESSED SOAP DISH PER SPECS - TYP. OF 5. INSTALL PER MANUF.'S RECOMMENDATIONS.
37. RECESSED WATER OUTLET BOX - FIELD VERIFY.
38. TOILET SEAT COVER DISPENSER BY OWNER.
39. SS COMPARTMENT SINK WITH DRAIN BOARD.
40. CERAMIC FIELD TILE & TRIM OVER CEMENT BD.
41. TERRAZZO SHOWER RECEPTOR PER SPECS - TYP. OF 6. INSTALL PER MANUF.'S RECOMMENDATIONS.
42. FLOOR / SHOWER DRAIN - PROVIDE 2% MAX. SLOPE FOR ALL DIRECTIONS, TYP.
43. SS TABLE & SINK.
44. SS WALL MOUNTED SHELVING - PROVIDE BACKING AS REQUIRED.
45. TV BY OWNER. PROVIDE WOOD BACKING FOR TV MOUNTING BRACKET/SUPPORT.
46. POWER & DATA - SEE ELECT.

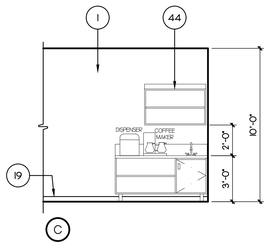

DINING

SCALE: 1/4"=1'-0" — 23

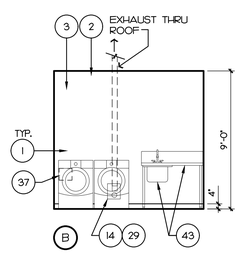

LAUNDRY

SCALE: 1/4"=1'-0" — 18

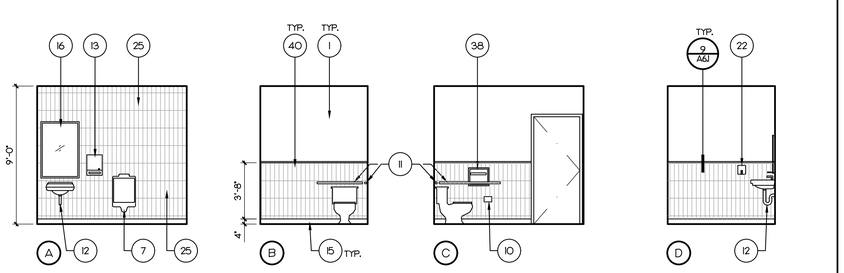

ADA RESTROOM (SEE 5/A5.1 FOR FIXTURES & ACCESSORIES MOUNTING)

SCALE: 1/4"=1'-0" — 8

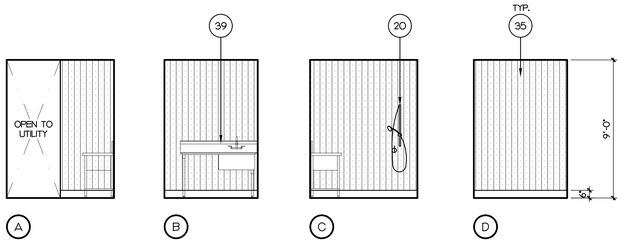

DECON

SCALE: 1/4"=1'-0" — 19

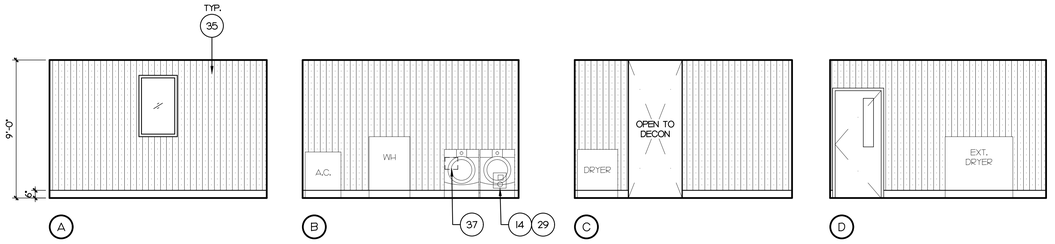

UTILITY

SCALE: 1/4"=1'-0" — 9

	MIRROR	TOILET PAPER DISPENSER (OF/OU)	PAPER TOWEL DISPENSER	24" TOWEL BAR	SOAP DISPENSER (OF/OU)	36" GRAB BAR	48" GRAB BAR	PAPER TOWEL DISPENSER (OF/OU)	GLASS SHOWER DOOR	RECESSED SOAP DISH	TOILET SEAT COVER DISPENSER (OF/OU)	*REMARKS
ADA R.R.	I	I	-	I	I	I	I	-	I	I	-	
BATH #1	I	I	I	I	-	-	-	I	I	I	-	
BATH #2	I	I	I	I	-	-	-	I	I	I	-	
BATH #3	I	I	I	I	-	-	-	I	I	I	-	
BATH #4	I	I	I	I	-	-	-	I	I	I	-	
BATH #5	I	I	I	I	-	-	-	I	I	I	-	
BC'S BATH	I	I	I	I	-	-	-	I	I	I	-	
RESTROOM	I	-	-	-	-	-	-	-	-	-	-	

NOTE: (OF/OU) - OWNER FURNISHED/OWNER INSTALLED

TOILET ACCESSORIES

SCALE: N/A — 4

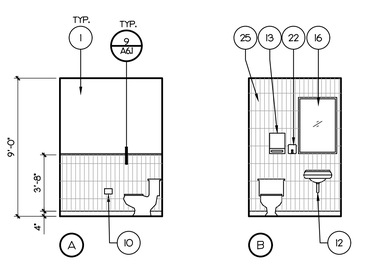

SHOP RESTROOM

SCALE: 1/4"=1'-0" — 20

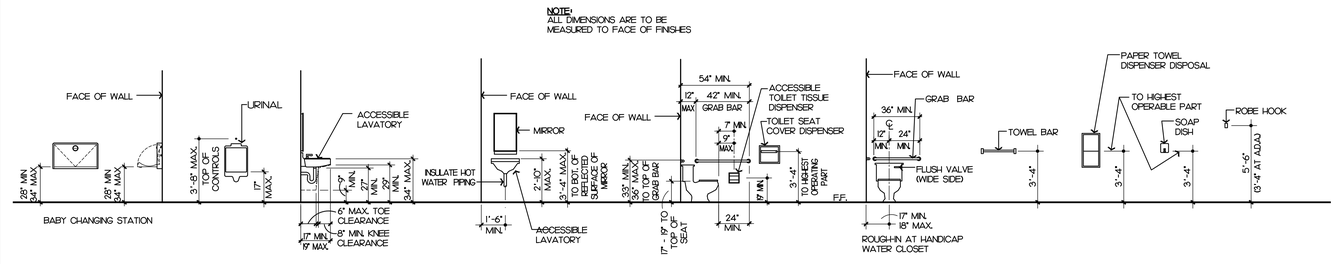

MOUNTING HEIGHTS FOR FIXTURES AND ACCESSORIES

SCALE: 1/4"=1'-0" — 5

STK
SAN DIEGO | IRVINE, CA
42095 ZEVO DR., TEMECULA, CALIFORNIA 92590-3780
Phone: 951.296.9110 Fax: 951.296.6079 Email: stk@stkinc.com

CONSULTANT:

REVIEWED FOR CODE COMPLIANCE

THESE PLANS AND DOCUMENTS HAVE BEEN REVIEWED AND FOUND TO BE IN COMPLIANCE WITH THE CODES AND REGULATIONS IN EFFECT AT THE TIME OF JURISDICTION. ISSUANCE OF A PERMIT IS RECOMMENDED, SUBJECT TO APPROVAL BY OTHER DEPARTMENTS AND ANY NOTED CONDITIONS. THE ISSUANCE OF A PERMIT BASED ON THESE PLANS AND DOCUMENTS OR APPROVAL OF ANY VIOLATIONS APPEAL DOES NOT AND STANDARDS, NOR RELIEVE THE OWNER, DESIGN PROFESSIONAL OF RECORD, OR CONTRACTOR OF RESPONSIBILITY FOR COMPLIANCE WITH ALL APPLICABLE CODES. THESE DOCUMENTS DOES NOT AUTHORIZE CONSTRUCTION THAT IS REJECTED IN VIOLATION OF ANY FEDERAL, STATE OR LOCAL REGULATION.

BUILDING BUREAU ADDITIONAL INC.
REVIEWED BY: STEVEN SM. PI, CASp

THIS SET OF THE PLANS AND SPECIFICATIONS MUST BE KEPT ON THE JOB SITE AT ALL TIMES DURING CONSTRUCTION. IT IS UNLAWFUL TO MAKE ANY CHANGES WITHOUT AUTHORIZATION FROM THE CITY DEPARTMENT. THE FIRM'S LIABILITY IS LIMITED BY ALL APPLICABLE DEPARTMENTS.

STK ARCHITECTURE SOLUTIONS INC.

PROJECT ADMINISTERED BY:
CITY OF PERRIS

101 NORTH "D" STREET
PERRIS, CA 92570

PROJECT NAME:
FIRE STATION 105 AND ADMINISTRATION BUILDING

PROJECT CIP: F077

2495 MURRIETA ROAD
PERRIS, CA 92585

ISSUE INFORMATION:

DATE:	INFORMATION:
11-26-25	95% CD SUBMITTAL
02-05-26	1 1st PC RESPONSE
02-19-26	2 2nd PC RESPONSE
02-22-26	3 3rd PC RESPONSE
04-27-26	4 4th PC RESPONSE

SHEET INFORMATION:

STK PROJECT NO.: 365-03-25
SCALE: AS NOTED
DATE: NOVEMBER 2025
PLOT DATE: –
DRAWN BY: JN

SEAL:

LICENSED ARCHITECT ANTONIO FINLEY No. C31476 REN. 07-31-27 STATE OF CALIFORNIA

SHEET TITLE:
INTERIOR ELEVATIONS - FIRE STATION

SHEET NO.:
A5.1

J:\365-City of Perris\BIM\03-25 Shell Perris Fire Station\Architecture\A5.1 - FS INT. ELEVATIONS.dwg
05/11/2026 12:02PM

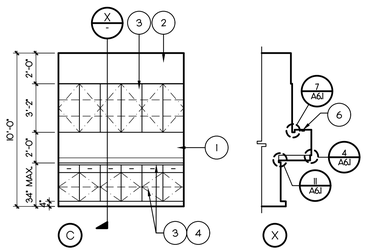

OPEN OFFICE | SCALE: 1/4"=1'-0" | 17

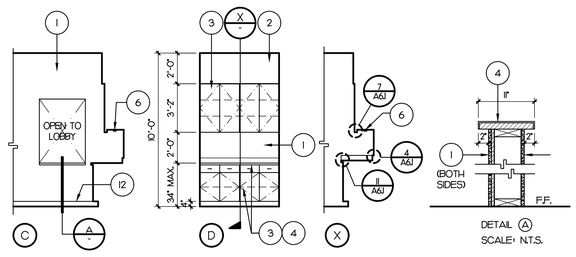

RECEPTION | SCALE: 1/4"=1'-0" | 13

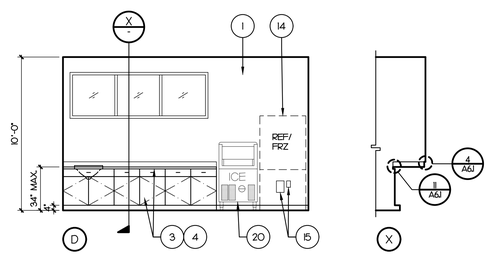

BREAK | SCALE: 1/4"=1'-0" | 6

NOT USED

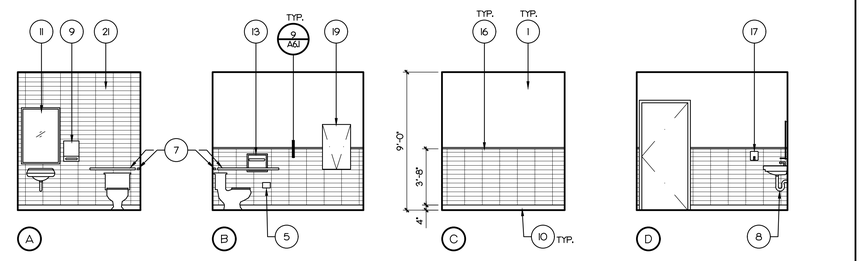

PUBLIC RESTROOM (SEE 5/A5.2 FOR FIXTURES & ACCESSORIES MOUNTING) | SCALE: 1/4"=1'-0" | 7

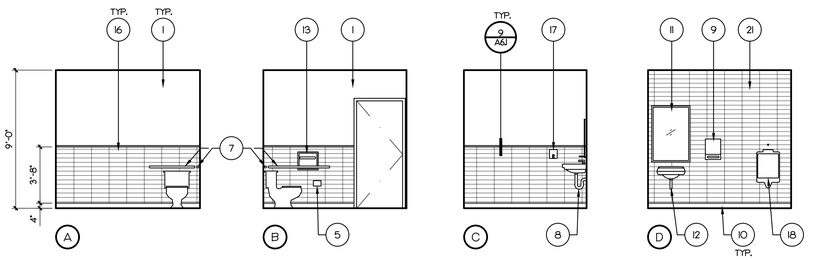

MEN RESTROOM | SCALE: 1/4"=1'-0" | 8

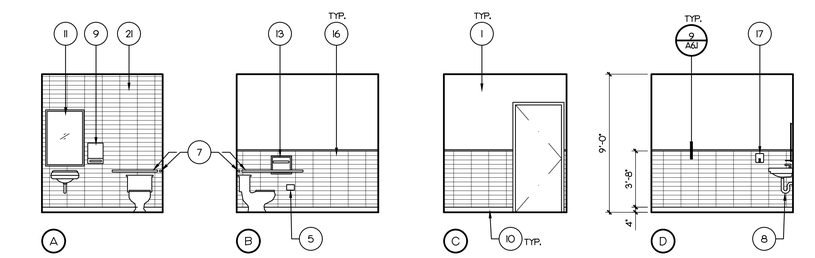

WOMEN RESTROOM (SEE 5/A5.2 FOR FIXTURES & ACCESSORIES MOUNTING) | SCALE: 1/4"=1'-0" | 9

KEY NOTE

1. GYP. BD.
2. GYP. BD. SOFFIT.
3. PLASTIC LAMINATE CABINETS w/ ADJUSTABLE SHELVES (TYP.).
4. SOLID SURFACE COUNTERTOP w/ 4" INTEGRAL COVE BACKSPLASH. PROVIDE 4" MATCHING END SPLASH AS APPLIES.
5. TOILET PAPER DISPENSER BY OWNER.
6. UNDER CABINET LIGHTING. USE WIRE WHIP. NO EXPOSED CONDUIT. SEE ELECT.
7. GRAB BARS - SEE 5/A6.1
8. INSULATE HOT WATER & DRAIN PIPING.
9. PAPER TOWEL DISPENSER BY OWNER.
10. 4" TILE COVED BASE.
11. MIRROR.
12. 4" TOP SET BASE.
13. TOILET SEAT COVER DISPENSER BY OWNER.
14. REFRIGERATOR / FREEZER. COORDINATE POWER & WATER CONNECTIONS.
15. POWER AND WATER OUTLETS. SEE PLUMBING & ELECT.
16. CERAMIC FIELD TILE & TRIM OVER CEMENT BD.
17. SOAP DISPENSER BY OWNER.
18. URINAL.
19. BABY CHANGING STATION - INSTALL PER MANUF.'S RECOMMENDATIONS.
20. ICE MAKER WITH FLOOR DRAIN. PROVIDE POWER & WATER CONNECTIONS AS REQUIRED.
21. CERAMIC ACCENT TILE (FULL HEIGHT) OVER CEMENT BD.

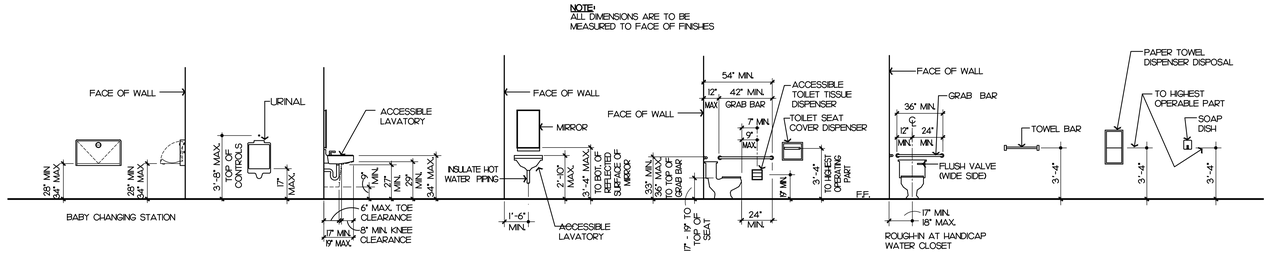

MOUNTING HEIGHTS FOR FIXTURES AND ACCESSORIES | SCALE: 1/4"=1'-0" | 5

	MIRROR	TOILET PAPER DISPENSER (OF/OU)	TOILET SEAT COVER DISPENSER (OF/OU)	SOAP DISPENSER (OF/OU)	24" GRAB BAR	36" GRAB BAR	42" GRAB BAR	PAPER TOWEL DISPENSER (OF/OU)	TOILET SEAT COVER DISPENSER (OF/OU)	*REMARKS
PUBLIC R.R.										
MEN										
WOMEN										

NOTE:
(OF./OU.) - OWNER FURNISHED/OWNER INSTALLED

TOILET ACCESSORIES | SCALE: N/A | 4

STK
ARCHITECTURE, INC.
42095 ZEVO DR., TEMECULA, CALIFORNIA 92590-3780
Phone: 951.296.9110 Fax: 951.296.6079 Email: stk@stkinc.com

CONSULTANT:

REVIEWED FOR CODE COMPLIANCE

THESE PLANS AND DOCUMENTS HAVE BEEN REVIEWED AND FOUND TO BE IN COMPLIANCE WITH THE CODES AND ORDINANCES APPLICABLE TO CONSTRUCTION. ISSUANCE OF A PERMIT IS RECOMMENDED, SUBJECT TO APPROVAL BY OTHER DEPARTMENTS AND ANY NOTED CONDITIONS. THE ISSUANCE OF A PERMIT BASED ON THESE PLANS AND DOCUMENTS, OR APPROVAL OF ANY SYSTEM OR APPLIANCE, DOES AND STANDARDS, NOR RELIEVE THE OWNER, DESIGN PROFESSIONAL OF RECORD, OR CONTRACTOR OF RESPONSIBILITY FOR COMPLIANCE WITH ALL APPLICABLE CODES. THESE DOCUMENTS DOES NOT AUTHORIZE CONSTRUCTION SUBJECTED IN VIOLATION OF ANY FEDERAL, STATE OR LOCAL REGULATIONS.

BUILDING BUREAU ACCEPTANCE
REVIEWED BY: STEVEN M. PLOG

THIS SET OF THE PLANS AND SPECIFICATIONS MUST BE KEPT ON THE JOB SITE AT ALL TIMES DURING CONSTRUCTION. ANY CHANGES, MODIFICATIONS OR REVISIONS MUST BE APPROVED BY THE CITY DEPARTMENT FOR WHICH IT (THEY) IS (ARE) REQUIRED. A FINAL APPROVAL IS OBTAINED BY ALL APPLICABLE DEPARTMENTS.

ESTIMATING SERVICES SOLUTIONS INC.

PROJECT ADMINISTERED BY:
CITY OF PERRIS

101 NORTH "D" STREET
PERRIS, CA 92570

PROJECT NAME:
FIRE STATION 105 AND ADMINISTRATION BUILDING

PROJECT CIP: F077

2495 MURRIETA ROAD
PERRIS, CA 92585

ISSUE INFORMATION:

DATE:	INFORMATION:
11-26-25	95% CD SUBMITTAL
02-05-26	1 1st PC RESPONSE
02-19-26	2 2nd PC RESPONSE
02-22-26	3 3rd PC RESPONSE
04-27-26	4 4th PC RESPONSE

SHEET INFORMATION:

STK PROJECT NO.:	365-03-25
SCALE:	AS NOTED
DATE:	NOVEMBER 2025
PLOT DATE:	-
DRAWN BY:	JN

SEAL:

LICENSED ARCHITECT ANTONIO FINLEY No. C31476 REN. 07-31-27 STATE OF CALIFORNIA

SHEET TITLE:
INTERIOR ELEVATIONS - ADMIN. BLDG. (ADD. ALT. #1)

SHEET NO.:
A5.2

05/12/2026 12:04PM J:\365-City of Perris\SD\5-25 South Perris Fire Station\Arch\sheets\A5.2 - ADMIN BLDG INT. ELEVATIONS.dwg

SCHEDULE OF ALLOWABLE CEILING JOIST SPANS:

(JOIST)	MAX SPAN (GYP. BOARD FINISH)	MAX SPAN (PLASTER FINISH)
2X4 @ 16"o.c.	10'-0"	8'-0"
2x6 @ 16"o.c.	14-0"	12'-0"
2x8 @ 16"o.c.	16'-0"	14'-0"

CEILING JOIST NOTE:
CONTRACTOR SHALL COORDINATE ALL GYPBD AND PLASTER CEILINGS WITH THE ARCHITECTURAL DWGS. CONTRACTOR SHALL PROVIDE CEILING JOISTS AS INDICATED IN CEILING JOIST SCHEDULE ABOVE.
CONTRACTOR SHALL COORDINATE ALL OPENINGS IN CEILING FRAMING FOR MECHANICAL REGISTERS, AND RECESSED LIGHTING, ETC. AND FRAME OPENINGS WIDER THAN 14 1/2 INCHES PER DETAIL.
TREATED WOOD SILLS WHERE CUT, DRILLED OR NOTCHED SHALL BE TREATED WITH A PRESERVATIVE AND APPROVED BY THE ARCHITECT AND THE ENFORCEMENT AGENCY ON ALL EXPOSED SURFACES FROM WHICH PRESERVATIVE TREATMENT HAS BEEN REMOVED.

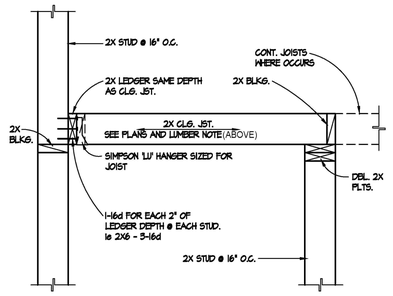

CEILING JOIST / FRAMING — SCALE: N.T.S. — 18

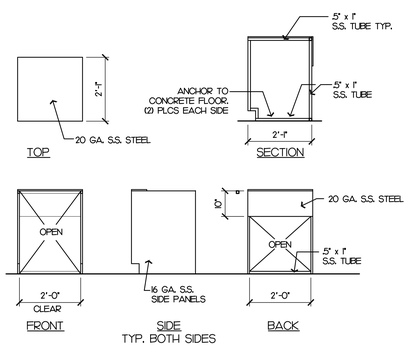

DISHWASHER CABINET — SCALE: 1/2" = 1'-0" — 19

TILE TRANSITION DETAIL — SCALE: 3" = 1'-0" — 20

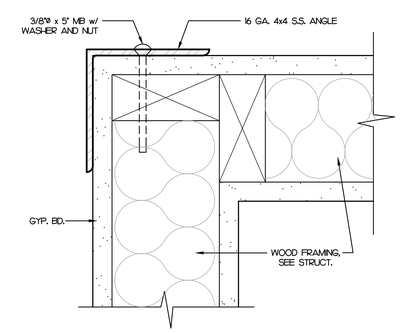

SS CORNER GUARD — SCALE: 6"=1'-0" — 13

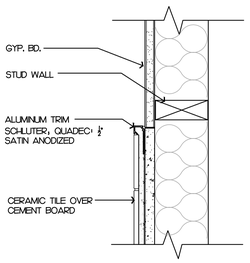

DETAIL — SCALE: 3"=1'-0" — 9

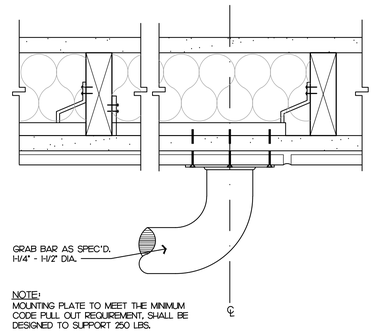

DETAIL — SCALE: 6"=1'-0" — 5

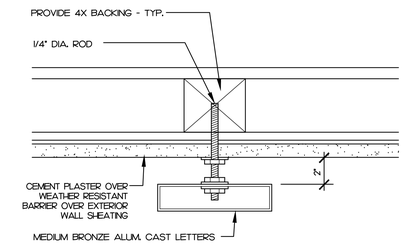

SIGN ATTACHMENT DETAIL — SCALE: 3"=1'-0" — 1

NOTE: ALL NAMES, TITLE(S) AND TEXT TO BE APPROVED BY THE CITY OF PERRIS PRIOR TO FABRICATION.

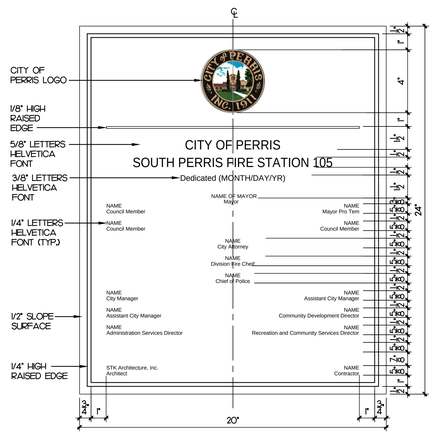

DEDICATION PLAQUE — SCALE: 3"=1'-0" — 15

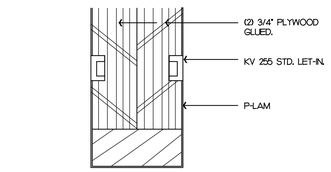

CABINET DETAIL — SCALE: FULL — 10

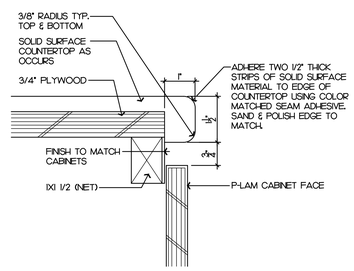

CABINET DETAIL — SCALE: 6"=1'-0" — 11

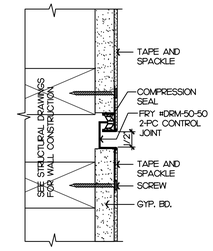

GYP. BD. CONTROL JOINT — SCALE: 6"=1'-0" — 6

CABINET DETAIL — SCALE: FULL — 7

NOT USED

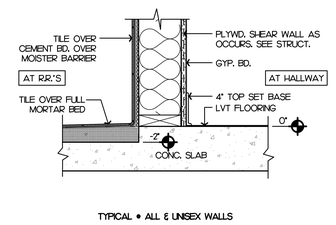

TYPICAL • ALL E UNISEX WALLS

WALL SILL AT BATHROOM — SCALE: 1-1/2"=1'-0" — 3

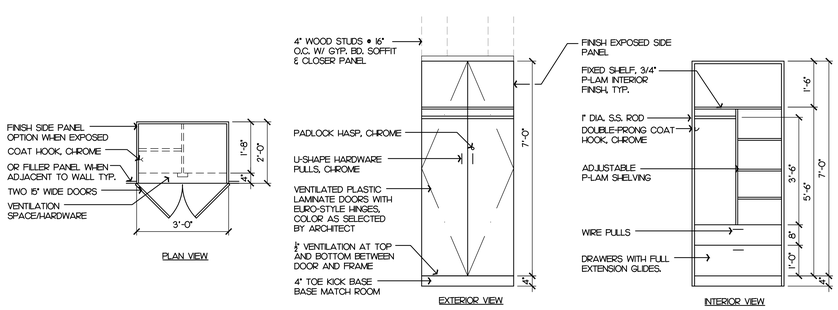

NOTE: CONSTRUCT PER "CUSTOM CABINETS" SPEC. SECTION 06 4100

WARDROBE LOCKERS — SCALE: 1/2"=1'-0" — 8

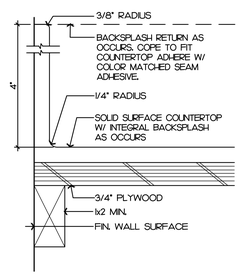

CABINET DETAIL — SCALE: 6"=1'-0" — 4

STK
42095 ZEVO DR., TEMECULA, CALIFORNIA 92590-3780
Phone: 951.296.9110 Fax: 951.296.6079 Email: stk@stkinc.com

CONSULTANT:

REVIEWED FOR CODE COMPLIANCE

THESE PLANS AND DOCUMENTS HAVE BEEN REVIEWED AND FOUND TO BE IN SUBSTANTIAL COMPLIANCE WITH THE CODES IN EFFECT IN THIS JURISDICTION. ISSUANCE OF A PERMIT IS NOT RECOMMENDED, SUBJECT TO APPROVAL BY OTHER DEPARTMENTS AND ANY NOTED CONDITIONS. THE ISSUANCE OF A PERMIT BASED ON THESE PLANS AND DOCUMENTS, THE APPROVAL OF ANY VIOLATIONS OF APPLICABLE CODES AND STANDARDS, NOR RELIEVE THE OWNER, DESIGN PROFESSIONAL OF RECORD, OR CONTRACTOR OF RESPONSIBILITY FOR COMPLYING WITH APPLICABLE REQUIREMENTS OF THE DOCUMENTS DOES NOT AUTHORIZE CONSTRUCTION TO BE EXECUTED IN VIOLATION OF ANY FEDERAL, STATE OR LOCAL REGULATIONS.

BUILDING BUREAU ADMINISTRATION
REVIEWED BY: STEVEN MA, PE, CBO

THIS SET OF THE PLANS AND SPECIFICATIONS BEARS A WET OR THE JOB SITE COPY IS NOT A VALID SET FOR CONSTRUCTION PURPOSES. ALL CHANGES WITHOUT ACKNOWLEDGEMENT BY CITY OFFICIAL OF PERRIS IS NOT APPROVED BY ALL APPLICABLE DEPARTMENTS.

ELECTRONIC PLAN CHECK SOLUTIONS INC.

PROJECT ADMINISTERED BY:
CITY OF PERRIS

101 NORTH "D" STREET
PERRIS, CA 92570

PROJECT NAME:
FIRE STATION 105 AND ADMINISTRATION BUILDING

PROJECT CIP: F077

2495 MURRIETA ROAD
PERRIS, CA 92585

ISSUE INFORMATION:

DATE:	INFORMATION:
11-26-25	95% CD SUBMITTAL
02-05-26	1 1st PC RESPONSE
02-19-26	2 2nd PC RESPONSE

SHEET INFORMATION:

STK PROJECT NO.: 365-03-25
SCALE: AS NOTED
DATE: NOVEMBER 2025
PLOT DATE: –
DRAWN BY: JN

SEAL:

LICENSED ARCHITECT ANTONIO FINLEY No. C31476 REN. 07-31-27 STATE OF CALIFORNIA

SHEET TITLE:
MISC. DETAILS

SHEET NO.:
A6.1

J:\365-City of Perris\365-03-25 South Perris Fire Station\Architecture\RAS 1 - MISC. DETAILS.dwg
04/14/2026 2:16PM

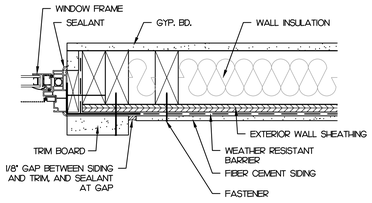

WINDOW JAMB DETAIL

SCALE: 3"=1'-0" | 17

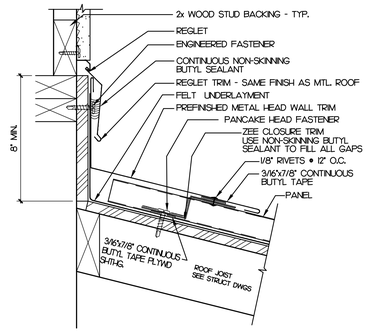

ROOF TO WALL DETAIL

SCALE: 3"=1'-0" | 13

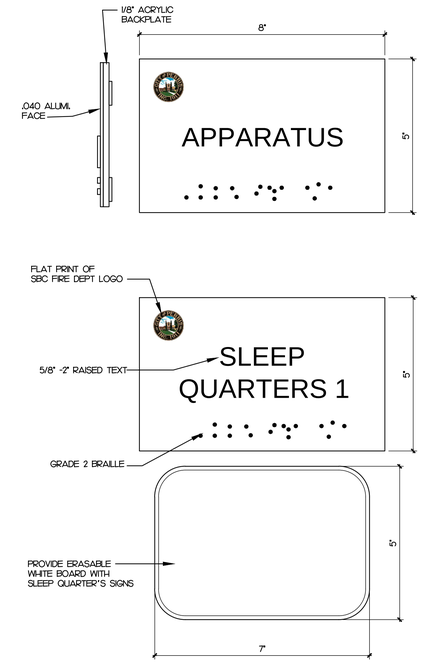

ROOM I.D. / SIGNS

SCALE: 6"=1'-0" | 10

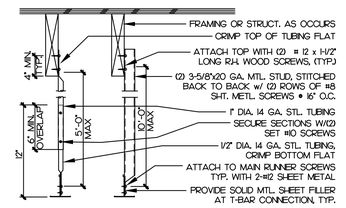

COMPRESSION STRUT

SCALE: 1-1/2"=1'-0" | 5

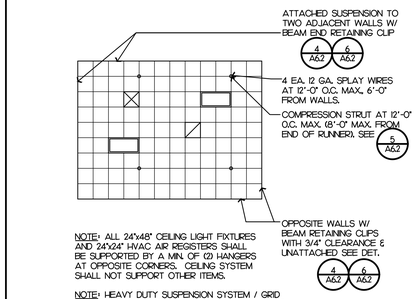

CEILING SYSTEM PLAN

SCALE: 1/8"=1'-0" | 1

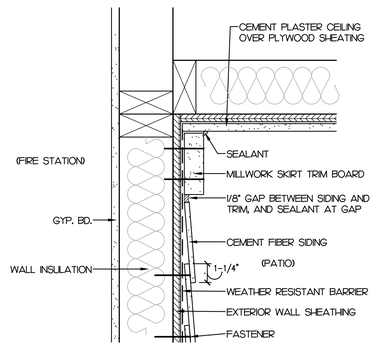

EXT. WALL TO CEILING DETAIL

SCALE: 3"=1'-0" | 18

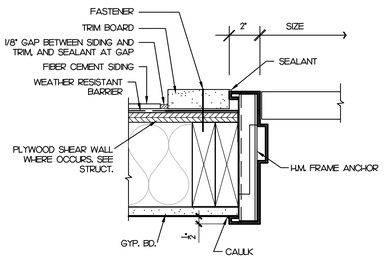

EXT. DR. HEAD/JAMB DETAIL

SCALE: 3"=1'-0" | 14

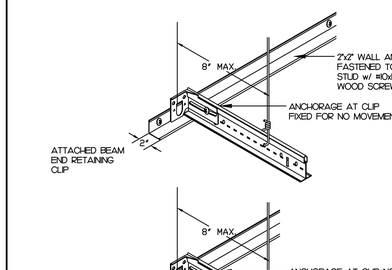

DETAIL

SCALE: 3"=1'-0" | 6

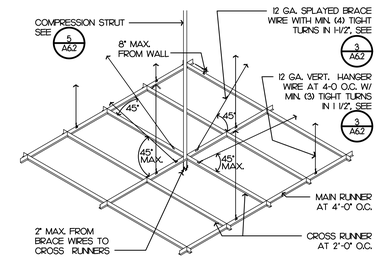

CEILING GRID SYSTEM - ISO

SCALE: 3/8"=1'-0" | 2

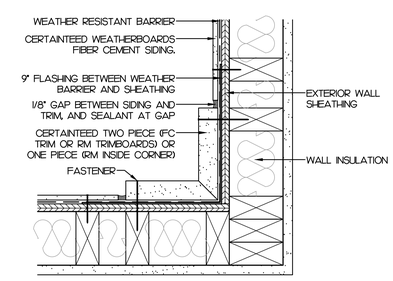

INTR. CORNER CONDITION

SCALE: 3"=1'-0" | 19

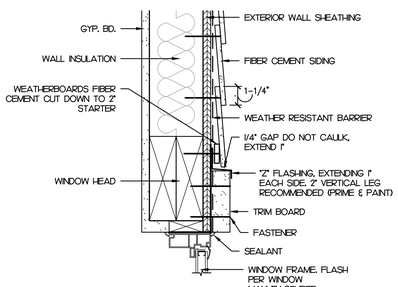

WINDOW HEAD DETAIL

SCALE: 3"=1'-0" | 15

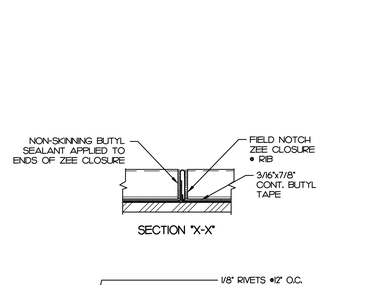

RIDGE DETAIL

SCALE: 3"=1'-0" | 12

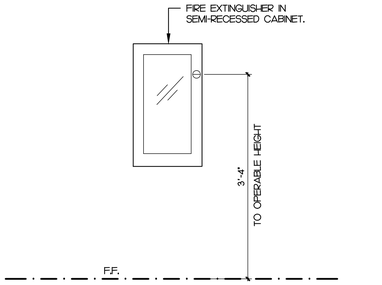

FIRE EXTINGUISHER CABINET

SCALE: 1"=1'-0" | 7

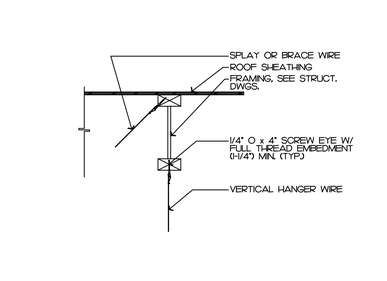

HANGER / SPLAY WIRE

SCALE: 6"=1'-0" | 3

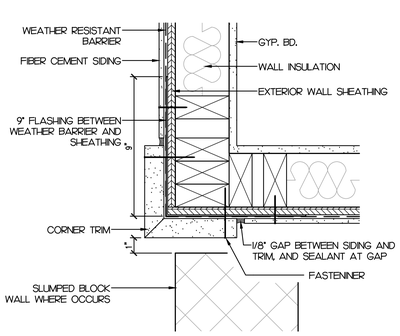

EXT. CORNER CONDITION

SCALE: 3"=1'-0" | 20

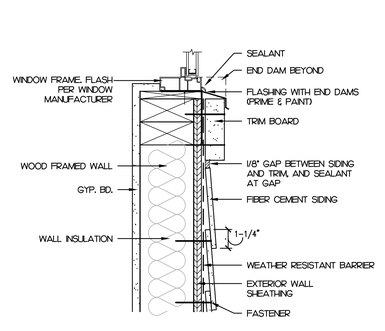

WINDOW SILL DETAIL

SCALE: 3"=1'-0" | 16

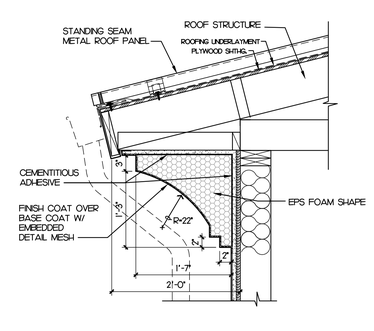

EAVE DETAIL

SCALE: 1"=1'-0" | 8

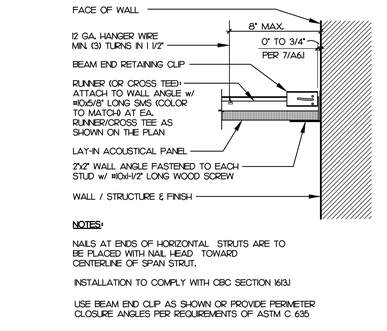

CEILING TO WALL DETAIL

SCALE: 3"=1'-0" | 4

STK
STEVEN T. KINSEY, INC.
42095 ZEVO DR., TEMECULA, CALIFORNIA 92590-3780
Phone: 951.296.9110 Fax: 951.296.6079 Email: stk@stkinc.com

CONSULTANT:

REVIEWED FOR CODE COMPLIANCE

THESE PLANS AND DOCUMENTS HAVE BEEN REVIEWED AND FOUND TO BE IN COMPLIANCE WITH THE CODES AND ORDINANCES OF THE JURISDICTION. ISSUANCE OF A PERMIT IS ALSO DEPENDENT UPON APPROVAL BY OTHER DEPARTMENTS AND ANY NOTED CONDITIONS. THE ISSUANCE OF A PERMIT BASED ON THESE PLANS AND DOCUMENTS OR APPROVAL OF ANY VIOLATIONS OF APPLICABLE CODES AND STANDARDS, NOR RELIEVE THE OWNER, DESIGN PROFESSIONAL OF RECORD, OR CONTRACTOR OF RESPONSIBILITY FOR COMPLIANCE. ANY CHANGES MADE ON THESE PLANS AND DOCUMENTS DOES NOT AUTHORIZE CONSTRUCTION THAT IS REJECTED IN VIOLATION OF ANY FEDERAL, STATE OR LOCAL REGULATIONS.

BUILDING BUREAU ID/DATE INC.
REVIEWED BY: STEVEN M. PENA

THIS SET OF THE PLANS AND SPECIFICATIONS MUST BE KEPT ON THE JOB SITE AT ALL TIMES IT IS UNLAWFUL TO MAKE ANY CHANGES OR ALTERATIONS ON THE PLANS WITHOUT AUTHORIZATION FROM THE CITY DEPARTMENT. IT IS UNLAWFUL TO OCCUPY THE BUILDING OR PORTION THEREOF UNTIL A FINAL APPROVAL IS GRANTED BY ALL APPLICABLE DEPARTMENTS.

© COPYRIGHT STK SOLUTIONS INC.

PROJECT ADMINISTERED BY:
CITY OF PERRIS

101 NORTH "D" STREET
PERRIS, CA 92570

PROJECT NAME:
FIRE STATION 105 AND ADMINISTRATION BUILDING

PROJECT CIP: F077

2495 MURRIETA ROAD
PERRIS, CA 92585

ISSUE INFORMATION:

DATE:	INFORMATION:
11-26-25	95% CD SUBMITTAL
02-05-26	1 1st PC RESPONSE
02-19-26	2 2nd PC RESPONSE

SHEET INFORMATION:

STK PROJECT NO.: 365-03-25
SCALE: AS NOTED
DATE: NOVEMBER 2025
PLOT DATE: –
DRAWN BY: JN

SEAL:



SHEET TITLE:

MISC. DETAILS

SHEET NO.:

A6.2

J:\365 City of Perris\365-03-25 South Perris Fire Station\Architect\A6.2 A6.3 - MISC. DETAILS.dwg
04/14/2026 2:37PM

NOT USED

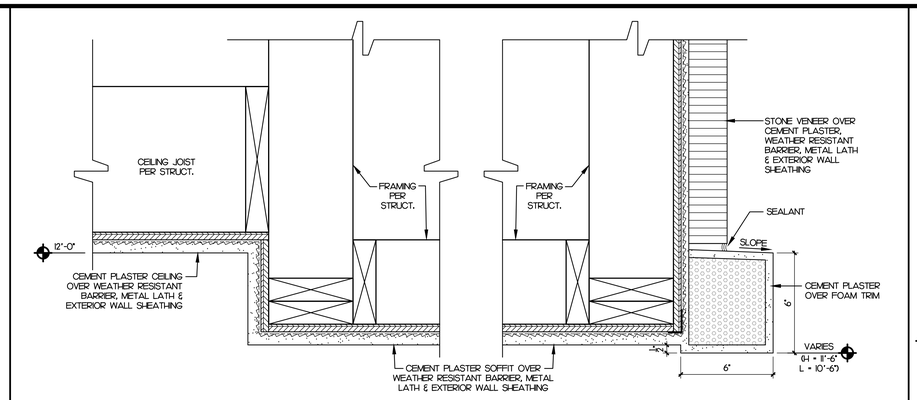

EXTERIOR SOFFIT DETAIL @ FIRE STATION ENTRY — SCALE: 3"=1'-0" — 9

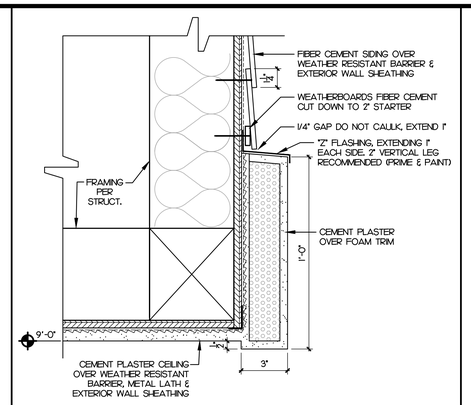

DETAIL — SCALE: 3"=1'-0" — 5

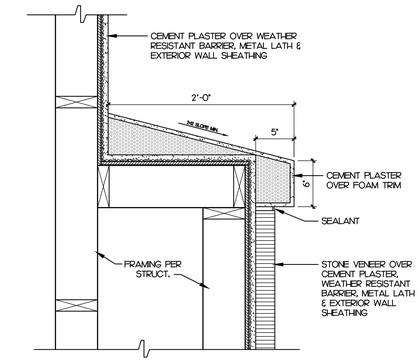

DETAIL — SCALE: 1/2"=1'-0" — 1

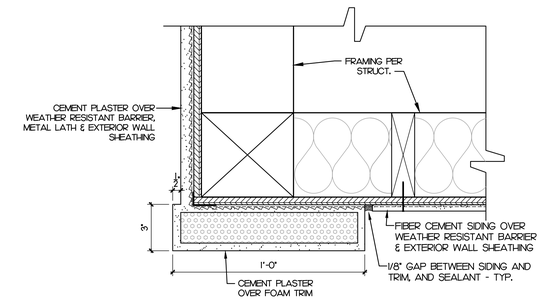

DETAIL — SCALE: 3"=1'-0" — 6

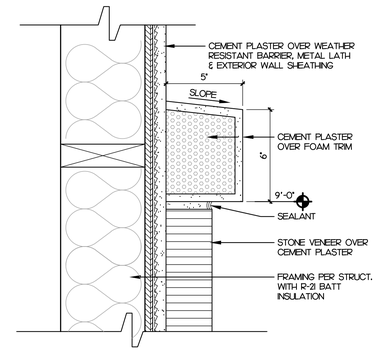

DETAIL — SCALE: 3"=1'-0" — 2

NOT USED

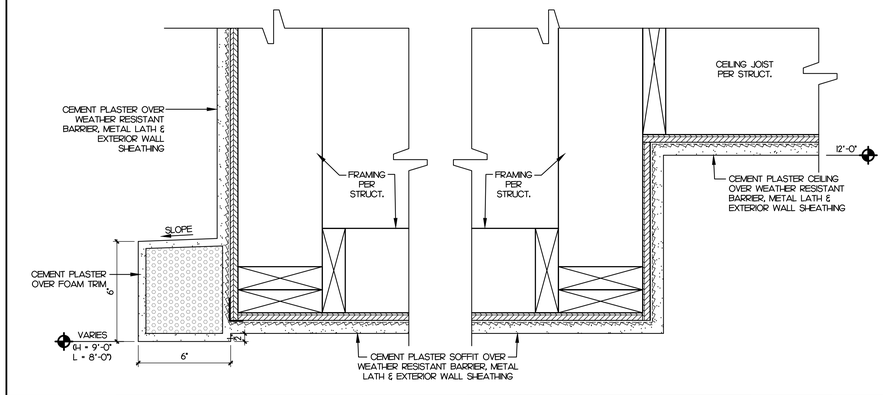

EXTERIOR SOFFIT DETAIL @ ADMIN. BUILDING ENTRY — SCALE: 3"=1'-0" — 7

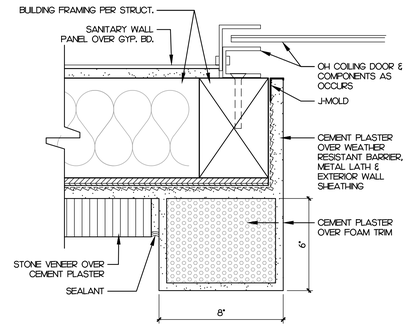

DETAIL — SCALE: 3"=1'-0" — 3

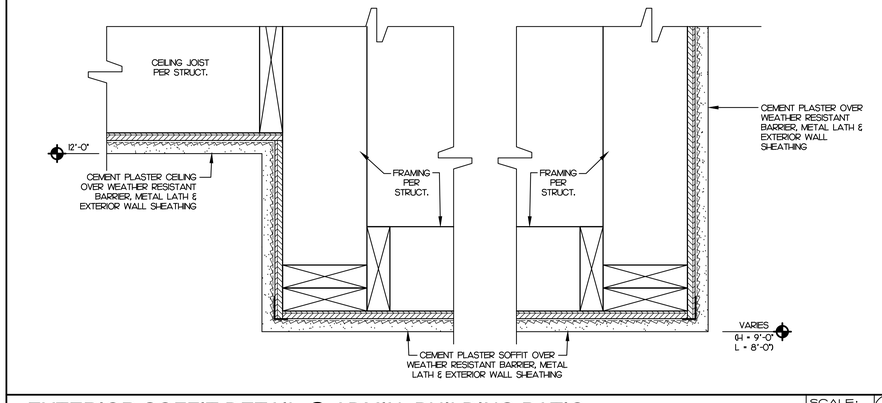

EXTERIOR SOFFIT DETAIL @ ADMIN. BUILDING PATIO — SCALE: 3"=1'-0" — 8

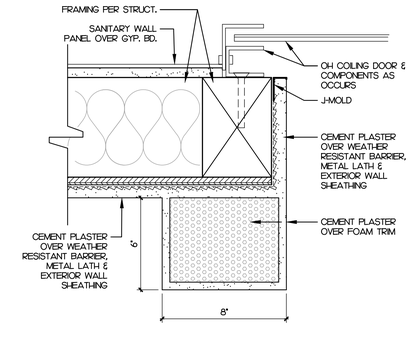

DETAIL — SCALE: 3"=1'-0" — 4

STK
SAN DIEGO | ORANGE COUNTY
42095 ZEVO DR., TEMECULA, CALIFORNIA 92590-3780
Phone: 951.296.9110 Fax: 951.296.9079 Email: stk@stkinc.com

CONSULTANT:

REVIEWED FOR CODE COMPLIANCE

THESE PLANS AND DOCUMENTS HAVE BEEN REVIEWED AND FOUND TO BE IN COMPLIANCE WITH THE CODES AND ORDINANCES OF THE CITY OF PERRIS JURISDICTION. ISSUANCE OF A PERMIT BASED ON PLANS IS SUBJECT TO APPROVAL BY OTHER DEPARTMENTS AND ANY NOTED CONDITIONS. THE ISSUANCE OF A PERMIT BASED ON PLANS, SPECIFICATIONS OR THE APPROVAL OF ANY SYSTEM OR APPLIANCE DOES AND STANDARDS, NOR RELIEVE THE OWNER, DESIGN PROFESSIONAL OF RECORD, OR CONTRACTOR OF RESPONSIBILITY FOR COMPLYING WITH ALL APPLICABLE CODES. PLANS AND DOCUMENTS DOES NOT AUTHORIZE CONSTRUCTION THAT IS REGULATED IN VIOLATION OF ANY FEDERAL, STATE OR LOCAL REGULATIONS.

BUILDING BUREAU SOLUTIONS, INC.
REVIEWED BY: STEVEN M. PEREZ

THIS SET OF THE PLANS AND SPECIFICATIONS MUST BE KEPT ON THE JOB SITE AT ALL TIMES DURING CONSTRUCTION. IT IS UNLAWFUL TO MAKE ANY CHANGES WITHOUT AUTHORIZATION FROM THE CITY DEPARTMENT. THE PERMIT HOLDER IS RESPONSIBLE FOR THE CORRECTNESS OF THESE PLANS. THE CITY'S REVIEW AND APPROVAL IS GENERAL BY ALL APPLICABLE DEPARTMENTS.

BUILDING BUREAU SOLUTIONS, INC.

PROJECT ADMINISTERED BY:
CITY OF PERRIS

101 NORTH "D" STREET
PERRIS, CA 92570

PROJECT NAME:
FIRE STATION 105 AND ADMINISTRATION BUILDING

PROJECT CIP: F077

2495 MURRIETA ROAD
PERRIS, CA 92585

ISSUE INFORMATION:

DATE:	INFORMATION:
11-26-25	95% CD SUBMITTAL
02-05-26	1 1st PC RESPONSE
02-19-26	2 2nd PC RESPONSE

SHEET INFORMATION:

STK PROJECT NO.: 365-03-25
SCALE: AS NOTED
DATE: NOVEMBER 2025
PLOT DATE: –
DRAWN BY: JN

SEAL:

LICENSED ARCHITECT ANTONIO FINLEY No. C31476 REN. 07-31-27 STATE OF CALIFORNIA

SHEET TITLE:
MISC. DETAILS

SHEET NO.:
A6.3

04/14/2026 2:17PM J:\365-City of Perris\365-03-25 South Perris Fire Station\Architecture\SAA 2-A6.3 - MISC. DETAILS.dwg

DESIGN PARAMETERS

Table 1: Seismic Design Parameters

Factor or Coefficient	Value
S_S	1.422g
S_1	0.526g
F_a	1.2g
F_V	1.774g
S_{DS}	0.990g
S_{D1}	0.700g
S_{MS}	1.480g
S_{M1}	1.052g
T_L	8 Seconds
MCE_G PGA	0.64g
Site Class	D

Subsurface Conditions

Subsurface exploration at the site consisted of six (6) exploratory borings to depths ranging from approximately 17.0 to 51.5 feet below existing site grades. The site exploration is described in Appendix A. Boring locations are shown on Figure A-9.

The soil encountered in the borings consisted of interlayered alluvial deposits comprised of clayey sand (SC), sandy clay (CL), silty clayey sand (SC-SM), silty sand (SM), and sand with silt (SP-SM). The soil encountered was generally very loose to loose within the upper 2 feet. Below 2 feet, the coarse-grained soil encountered was generally medium dense to dense. The fine-grained soil encountered was stiff to hard. The soil was moist to very moist at the time of investigation.

Corrosion Potential: Analytical testing indicates the concentration of sulfates is 32 ppm. In accordance with ACI 318, Table 4.2.1, the soil is classified as having a negligible sulfate exposure. The chloride concentration in the tested sample was 28 ppm and indicates that the soil is generally not corrosive with respect to ferrous metal. The soil is alkaline with a pH value of 8.4. The saturated minimum resistivity value of 1,552 ohm-cm indicates the soil may be corrosive to buried ferrous metal. Alternative material such as PVC piping should be considered. Inland Foundation Engineering, Inc. does not practice corrosion engineering. A qualified corrosion engineer should be consulted for additional guidance.

Hydrocollapse Potential: Consolidation testing indicates that the soil is compressible and normally consolidated. The results show a slight potential for expansion when

DEPARTMENT OF BUILDING & SAFETY
CITY OF PERRIS

Design Requirements and Current Codes 2022 CALIFORNIA CODES

Wind: 110 m.p.h.; exposure "C"
Rain: 2"
Seismic: Design category "D"
Snow Load: None
Roof Load: See chapter 23 of C.B.C.
Climate Zone: 10
Soils: See Soils Report or Geotechnical Engineer

Current Codes Adopted by Ordinance: 2022 Versions

California Building Code 1 & 2
California Mechanical Code
Code California Plumbing
California Electrical Code
California Energy Code
California Residential Code
California Green Building Standards Code
California Fire Code
California Administrative Code
California Existing Building Code

update 05/18/2023

SHEET INDEX

GENERAL NOTES

SCS STRUCTURAL COVER SHEET
SN1 STRUCTURAL NOTES
SN2 STRUCTURAL NOTES

PLANS

S1 FIRE STATION FOUNDATION PLAN
S2 FIRE STATION ROOF FRAMING PLAN
S3 FIRE STATION CLERESTORY ROOF FRAMING PLAN
S3.1 FIRE STATION ROOF WIND LOAD DIAGRAM 1
S4 ADMIN BUILDING FOUNDATION PLAN
S5 ADMIN BUILDING ROOF FRAMING PLAN
S5.1 ADMIN BUILDING ROOF WIND LOAD DIAGRAM 1
S6 STORAGE BUILDINGS FOUNDATION AND ROOF FRAMING PLANS
S7 FUEL TANK CANOPY FOUNDATION AND ROOF FRAMING PLANS
S8 TRASH ENCLOSURE FOUNDATION AND ROOF FRAMING PLANS

STRUCTURAL DETAILS

SD1 STRUCTURAL FOUNDATION DETAILS
SD2 STRUCTURAL GENERAL FRAMING DETAILS
SD2.1 STRUCTURAL GENERAL FRAMING DETAILS 1
SD3 STRUCTURAL ROOF FRAMING DETAILS
SD4 SITE STRUCTURE DETAILS

PROJECT DESIGN CRITERIA	
BUILDING CODE:	2022 CBC
LOCATION (LATITUDE / LONGITUDE):	33.75263°N / 117.20584°W
GEOTECHNICAL PARAMETERS:	
SOILS ENGINEER:	INLAND FOUNDATION ENGINEERING, INC.
REPORT NUMBER:	S168-196
DATE:	SEPTEMBER 23, 2025
ALLOWABLE SOIL BEARING PRESSURE:	2,000 PSF
ALLOWABLE PASSIVE PRESSURE:	200 PCF
EXPANSION POTENTIAL:	EI = 69, MEDIUM EXPANSION CLASS
PLASTICITY INDEX:	PI = 17
LIQUEFACTION POTENTIAL:	NOT SIGNIFICANT
TOTAL SETTLEMENT:	<1"
DIFFERENTIAL SETTLEMENT POTENTIAL:	<½"
CORROSIVITY:	NOT CORROSIVE
SULFATE CONTENT:	32 PPM
CHLORIDE CONTENT:	28 PPM
SEISMIC DESIGN PARAMETERS:	
RISK CATEGORY:	IV
SITE CLASS:	D
SHORT PERIOD SPECTRAL ACCELERATION, S_S:	1.422
1s PERIOD SPECTRAL ACCELERATION, S_1:	0.526
SPECTRAL RESPONSE COEFFICIENT, S_{D1}:	0.700
SHORT PERIOD SPECTRAL RESPONSE, S_{DS}:	0.990
SITE COEFFICIENT, F_a:	1.2
SITE COEFFICIENT, F_v:	1.774
SEISMIC DESIGN CATEGORY:	D
SEISMIC IMPORTANCE FACTOR, I_E:	1.5
RESPONSE MODIFICATION, R & SEISMIC FORCE RESISTING SYSTEM:	6.5 - LIGHT FRAMED SHEAR WALLS
DESIGN BASE SHEAR:	0.228pW
SEISMIC RESPONSE COEFFICIENT, C_s:	0.228
DESIGN PROCEDURE:	EQUIVALENT LATERAL FORCE
REDUNDANCY FACTOR, ρ:	1.0
SYSTEM OVERSTRENGTH FACTOR, Ω:	2.5
DEFLECTION AMPLIFICATION FACTOR, C_d:	4.0
HORIZONTAL STRUCTURAL IRREGULARITIES:	TYPE 2
VERTICAL STRUCTURAL IRREGULARITIES:	NONE
WIND DESIGN PARAMETERS:	
RISK CATEGORY:	IV
	C
ULTIMATE DESIGN WIND SPEED (3-SECOND GUST), V_{ULT}:	110
NOMINAL DESIGN WIND SPEED (3-SECOND GUST), V_{ASD}:	85 MPH
INTERNAL PRESSURE COEFFICIENT, GC_{pi}:	±0.18

GRAVITY DESIGN PARAMETERS: (PSF, SERVICE LOADS)					
	DEAD	ROOF LIVE	SNOW	LIVE	TOTAL
ROOF:	15	20	-	-	35
EXTERIOR WALL:	15	-	-	-	15
INTERIOR WALL:	10	-	-	-	10

STK
42095 ZEVO DR., TEMECULA, CALIFORNIA 92590-3780
Phone: 951.296.9110 Fax: 951.296.6079 Email: stk@stkinc.com

CONSULTANT:

ISE
STRUCTURAL ENGINEERS
2 7 3 6 9 - V I A I N D U S T R I A
T E M E C U L A , C A 9 2 5 9 0
T E L E : 9 5 1 . 6 9 0 . 0 3 2
W W W . I S E E N G I N E E R S . C O M
S O C A L | N O R C A L | C O L O R A D O

REVIEWED FOR CODE COMPLIANCE
THESE PLANS AND SPECIFICATIONS HAVE BEEN FOUND TO BE IN CONFORMANCE WITH THE CODES ADOPTED BY THIS JURISDICTION. ITS REVIEW AND APPROVAL ARE SUBJECT TO APPROVAL BY OTHER DEPARTMENTS HAVING JURISDICTION OVER THE PROJECT. APPROVAL OF ALL CONSTRUCTION DOCUMENTS SHALL BE OBTAINED BEFORE ANY BUILDING WORK. RELIEVE THE OWNER OR THE OWNER'S AUTHORIZED AGENT OR CONTRACTOR OF RESPONSIBILITY FOR COMPLYING WITH ALL APPLICABLE CODES AND DOCUMENTS DURING THE CONSTRUCTION OF THE PROJECT. ANY WORK PROCEED IN VIOLATION OF ANY FEDERAL, STATE OR LOCAL LAW.
BUILDING BUREAU VOLUNTEER, INC.
REVIEWED BY: STEVEN HOWARD
DATE: 02/05/2026
STRUCTURAL
DISCIPLINE
NOTE: THIS REVIEW DOES NOT INCLUDE REVIEW OF ANY OTHER DISCIPLINE OR DEPARTMENTS.

PROJECT ADMINISTERED BY:
CITY OF PERRIS

101 NORTH "D" STREET
PERRIS, CA 92570

PROJECT NAME:
FIRE STATION 105 AND ADMINISTRATION BUILDING

PROJECT CIP: F077

2495 MURRIETA ROAD
PERRIS, CA 92585

ISSUE INFORMATION:

DATE:	INFORMATION:
11-26-25	95% CD SUBMITTAL
02-05-26	1 BLDG. & SAFETY 1st PLAN CHECK

SHEET INFORMATION:

STK PROJECT NO.: 365-03-25
SCALE: AS NOTED
DATE: FEBRUARY 2026
PLOT DATE: –
DRAWN BY: SF

SEAL:

REGISTERED PROFESSIONAL ENGINEER SANDY FONG C83985 CIVIL STATE OF CALIFORNIA

SHEET TITLE:

COVER SHEET

SHEET NO.:

SCS

02/5/2026 4:13PM W:\8800 - STK\8400.67 - Perris Fire Stations\01 - Drawings\SCS.dwg

WOOD MANUFACTURED PLATED TRUSSES

1. MANUFACTURED PLATED TRUSSES ARE A DEFERRED SUBMITTAL ITEM. SEE DESIGN/BUILD NOT SECTION FOR REQUIREMENTS.
2. GRAVITY LOADS: REFER TO **PROJECT DESIGN CRITERIA** FOR ALL ROOF & FLOOR MEMBER GRAVITY LOAD REQUIREMENTS. TRUSSES SHALL BE DESIGNED WITH CONSIDERATION FOR ALL SUPERIMPOSED LOADING, SUCH AS CHIMNEY FLUE FRAMING, MECHANICAL EQUIPMENT, ETC.
3. LATERAL LOADS: TRUSSES SHALL BE DESIGNED FOR SPECIFIC DRAG LOADS NOTED ON THE STRUCTURAL PLANS. ALL GABLE END TRUSSES SHALL BE DESIGNED FOR A MINIMUM 1000# LATERAL LOAD.
4. MATERIAL: ALL TRUSSES SHALL UTILIZE DOUGLAS FIR LUMBER UNLESS NOTED OTHERWISE.
5. DESIGN & CONSTRUCTION: THE STRUCTURAL DESIGN, MEANS OF CONSTRUCTION AND BRACING OF TRUSSES IS THE SOLE RESPONSIBILITY OF THE TRUSS MANUFACTURER AND ENGINEER OF RECORD FOR THE TRUSS DESIGN AND NOT ISE.
6. SHOP DRAWINGS: THE TRUSS SUPPLIER SHALL SUBMIT SHOP DRAWINGS TO ISE FOR REVIEW AND APPROVAL FOR GENERAL CONFORMANCE TO THE BUILDING STRUCTURAL DESIGN. THE SHOP DRAWINGS SHOULD INCLUDE A FLOOR PLAN LAYOUT AND DESIGN FOR EACH SPECIFIC TRUSS. THE TRUSS CALCULATION SHOULD INCLUDE MATERIAL TYPE, LOADING, TRUSS PROFILE AND REACTIONS.
7. HANGERS: THE TRUSS SUPPLIER SHALL SPECIFY ALL TRUSS TO TRUSS & TRUSS TO FRAMING MEMBER HANGERS.
8. LAYOUT & SPACING: THE STRUCTURAL PLANS SPECIFY A RECOMMENDED SPACING OF TRUSSES. THE TRUSS DESIGN PACKAGE DETERMINES THE FINAL SPACING OF TRUSSES. THE INTENT OF THE STRUCTURAL PLANS IS A RECOMMENDATION AND IN NO WAY REPRESENTS THE FINAL TRUSS SHAPE, CONFIGURATION OR SPACING.
9. TRUSS DEFLECTION SHALL BE LIMITED TO THE FOLLOWING:

DEFLECTION CRITERIA		
LEVEL	LIVE LOAD	TOTAL LOAD
ROOF	L/360	L/240
FLOOR	L/600	L/240

CONVENTIONAL WOOD FRAMING REQUIREMENTS - CBC TABLE 2304.10.2	
CONNECTION	NAILING
BLOCKING BETWEEN JOISTS OR RAFTERS TO TOP PLATES, TOENAIL	(3) 8d COMMON , (3) 3" x 0.131" NAILS, OR (3) 3" 14 GAGE STAPLES
BLOCKING BETWEEN RAFTERS OR TRUSS NOT AT WALL TOP PLATES, TOENAIL, EACH END	(2) 8d COMMON , (2) 3" x 0.131" NAILS, (2) 3" 14 GAGE STAPLES
BLOCKING BETWEEN RAFTERS OR TRUSS NOT AT WALL TOP PLATES, END NAIL	(2) 16d COMMON , (3) 3" x 0.131" NAILS, (3) 3" 14 GAGE STAPLES
FLAT BLOCKING TO TRUSS/WEB FILLER, FACE NAIL	16d COMMON , 3" x 0.131" NAILS, 3" 14 GAGE STAPLES @ 6" O.C.
CEILING JOIST TO TOP PLATE, EACH JOIST, TOENAIL	(3) 8d COMMON , (3) 3" x 0.131" NAILS, (3) 3" 14 GAGE STAPLES. 7/16" CROWN
CEILING JOIST, LAPS PARTITION, FACE NAIL - TABLE 2308.7.3.1	(3) 16d COMMON , (4) 3" x 0.131" NAILS, OR (4) 3" 14 GAGE STAPLES. 7/16" CROWN
CEILING JOISTS TO PARALLEL RAFTERS, FACE NAIL - TABLE 2308.7.3.1	PER TABLE 2308.7.3.1
COLLAR TIE TO RAFTER, FACE NAIL	(3) 10d COMMON, (4) 3" x 0.131" NAILS, OR (4) 3" 14 GAGE STAPLES
RAFTER OR ROOF TRUSS TO PLATE, TOENAIL - TABLE 2308.7.5	(3) 10d COMMON, (4) 3" x 0.131" NAILS, OR (4) 3" 14 GAGE STAPLES
ROOF RAFTER TO 2x RIDGE BEAM, END NAIL	(2) 16d COMMON, (3) 3" x 0.131" NAILS, OR (3) 3" 14 GAGE STAPLES
ROOF RAFTER TO 2x RIDGE BEAM, TOE NAIL	(3) 10d COMMON, (4) 3" x 0.131" NAILS, OR (4) 3" 14 GAGE STAPLES
STUD TO STUD (NON-BRACED WALL PANELS), 24" O.C. FACE NAIL	16d COMMON (3.5"x 0.162")
STUD TO STUD (NON-BRACED WALL PANELS), 16" O.C. FACE NAIL	3" x 0.131" NAILS, (3) 3" 14 GAGE STAPLES
STUD TO STUD AT INTERSECTING CORNER (BRACED), 16" O.C. FACE NAIL	16d COMMON (3.5"x 0.162")
STUD TO STUD AT INTERSECTING CORNER (BRACED), 12" O.C. FACE NAIL	3" x 0.131" NAILS, (3) 3" 14 GAGE STAPLES
BUILT-UP HEADER (2" TO 2"), 16" O.C. EACH EDGE, FACE NAIL	16d COMMON (3.5"x 0.162")
CONTINUOUS HEADER TO STUD, TOENAIL	(4) 8d COMMON
TOP PLATE TO TOP PLATE, 16" O.C. FACE NAIL	16d COMMON
TOP PLATE TO TOP PLATE, 12" O.C. FACE NAIL	3" x 0.131" NAILS, 3" 14 GAGE STAPLES
TOP PLATE TO TOP PLATE, AT END JOINTS, EACH SIDE OF END JOINT, FACE NAIL (MIN. 24" LAP SPLICE LENGTH EACH SIDE END JOINT)	(8) 16d COMMON, (12) 3" x 0.131" NAILS, (12) 3" 14 GAGE STAPLES
BOTTOM PLATE TO JOIST, RIM JOIST, OR BLOCKING AT NON-BRACED PANEL, 16" O.C. FACE NAIL	16d COMMON
BOTTOM PLATE TO JOIST, RIM JOIST, OR BLOCKING AT NON-BRACED PANEL, 12" O.C. FACE NAIL	3" x 0.131" NAILS, 3" 14 GAGE STAPLES
BOTTOM PLATE TO JOIST, RIM JOIST, OR BLOCKING AT BRACED PANEL, 16" O.C. FACE NAIL	(2) 16d COMMON, (4) 3" x 0.131" NAILS, (4) 3" 14 GAGE STAPLES
STUD TO TOP OR BOTTOM PLATE, TOENAIL	(4) 8d COMMON, (4) 3" x 0.131" NAILS, (4) 3" 14 GAGE STAPLES
STUD TO TOP OR BOTTOM PLATE, END NAIL	(2) 16d COMMON, (3) 3" x 0.131" NAILS, (3) 3" 14 GAGE STAPLES
TOP OR BOTTOM PLATE TO STUD, END NAIL	(2) 16d COMMON, (3) 3" x 0.131" NAILS, (3) 3" 14 GAGE STAPLES
TOP PLATES, LAP AND INTERSECTIONS, FACE NAIL	(2) 16d COMMON , (3) 3" x 0.131" NAILS, OR (3) 3" 14 GAGE STAPLES
1" BRACE TO EACH STUD AND PLATE, FACE NAIL	(2) 8d COMMON, (2) 3" x 0.131" NAILS, OR (2) 3" 14 GAGE STAPLES
1" x 6" SHEATHING TO EACH BEARING, FACE NAIL	(2) 8d COMMON, (2) 3" x 0.128" NAILS
1" x 8" AND WIDER SHEATHING TO EACH BEARING, FACE NAIL	(3) 8d COMMON, (3) 3" x 0.128" NAILS
JOIST TO SILL OR GIRDER, TOENAIL	(3) 8d COMMON , (3) 3" x 0.131" NAILS, OR (3) 3" 14 GAGE STAPLES
RIM JOIST, BLOCKING TO TOP PLATE, TOENAIL,	8d (2 1/2" x 0.131") AT 6" o/c, 3" x 0.131" NAILS AT 6" o/c, OR 3" 14 GAGE STAPLES AT 6" o/c
1" x 6" SUBFLOOR OR LESS TO EACH JOIST, FACE NAIL	(2) 8d COMMON
2" SUBFLOOR TO JOIST OR GIRDER, BLIND AND FACE NAIL	(2) 16d COMMON
2" PLANKS.	(2) 16d COMMON AT EACH BEARING
BUILT-UP GIRDER AND BEAMS	20d COMMON AT 32" o/c, 3" x 0.131" NAILS AT 24" o/c, OR 3" 14 GAGE STAPLES AT 24" o/c AT, AT TOP AND BOTTOM, STAGGERED (2) 20d COMMON, (3) 3" x 0.131" NAILS, OR (3) 3" 14 GAGE STAPLES AT ENDS AND AT EACH SPLICE
LEDGER STRIP, EACH JOIST OR RAFTER, FACE NAIL	(3) 16d COMMON, (4) 3" x 0.131" NAILS, OR (4) 3" 14 GAGE STAPLES
JOIST TO BAND JOIST, FACE NAIL	(3) 16d COMMON, (4) 3" x 0.131" NAILS, OR (4) 3" 14 GAGE STAPLES
BRIDGING TO JOIST, TOENAIL EACH END	(2) 8d COMMON , (2) 3" x 0.131" NAILS, OR (2) 3" 14 GAGE STAPLES
BRIDGING TO JOIST, TOENAIL EACH END	(2) 8d COMMON , (2) 3" x 0.131" NAILS, OR (2) 3" 14 GAGE STAPLES

GLUED LAMINATED LUMBER

1. FABRICATION AND WORKMANSHIP: ALL FABRICATION AND WORKMANSHIP SHALL CONFORM TO THE CURRENT EDITION OF THE STANDARD SPECIFICATIONS FOR STRUCTURAL GLUED LAMINATED DOUGLAS FIR (COAST REGION) LUMBER BY THE WEST COAST LUMBERMEN'S ASSOCIATION AND CURRENT EDITION OF TIMBER CONSTRUCTION.
2. MATERIAL: ALL GLUED LAMINATED MEMBERS SHALL BE DOUGLAS FIR, COMBINATION 24F WITH WATERPROOF RESORCINAL OR PHENOL RESORCINAL GLUE CONFORMING TO THE FEDERAL SPECIFICATIONS MIL-A-397-B. REFERENCE THE FOLLOWING TABLE FOR GLU-LAM GRADE BASED ON USE:

GLUE-LAMINATED BEAM SPECIFICATIONS	
BEAM CONDITION	GRADE:
SIMPLY SUPPORTED	DF/DF 24F-V4
CANTILEVERED	DF/DF 24F-V8
CONTINUOUS OVER SUPPORTS	DF/DF 24F-V8

3. FINISH: FINISH OF THE MEMBERS SHALL BE INDUSTRIAL APPEARANCE GRADE IN CONFORMANCE WITH THE STANDARD APPEARANCE GRADES OF THE A.I.T.C.
4. INSPECTION: A CERTIFICATE OF INSPECTION FOR EACH GLU-LAM BEAM FROM AN APPROVED TESTING AGENCY SHALL BE SUBMITTED TO AND APPROVED BY THE LOCAL BUILDING DEPARTMENT AND BY THE ENGINEER PRIOR TO ERECTION. ALL GLU-LAM BEAMS SHALL BE PROPERLY IDENTIFIED TO THE SATISFACTION OF THE BUILDING DEPARTMENT. GLU-LAM BEAMS SHALL BE MARKED **ANSI/AITC STANDARD** A190.1, THE CERTIFICATE SHOULD BE PROVIDED TO THE FIELD INSPECTOR AND SHALL STATE THE BEAM PROPERTIES AND CAMBER.
5. CAMBER: ALL GLU-LAM BEAMS SHALL HAVE A STANDARD CAMBER BASED ON RADIUS OF 3500 FT., U.N.O.

WOOD FRAMING

1. SAWN LUMBER: ALL STRUCTURAL SAWN LUMBER SHALL BE **DOUGLAS FIR LARCH** WITH 19% MAXIMUM MOISTURE CONTENT OF THE FOLLOWING GRADES, CONFORMING TO STANDARD GRADING RULES FOR WEST COAST LUMBER NO. 17, UNLESS NOTED OTHERWISE. THE LUMBER GRADES AS SPECIFIED BELOW MEET MINIMUM REQUIREMENTS:

LUMBER GRADES	
CONDITION	GRADE
PLATES & BLOCKING	STANDARD OR BETTER
STUDS TO 10'-0" IN HEIGHT	STANDARD OR BETTER
STUDS OVER 10'-0" IN HEIGHT	#2
2x RAFTER JOISTS	#2
4x6 THROUGH 4x12 BEAMS, HEADER & POSTS	#1
4x14 BEAMS, HEADERS & POSTS	#1
4x4 POSTS, HEADERS	#2
6x AND LARGER POSTS, BEAMS, STRINGERS	#1

2. GRADE STAMP: WHERE POSSIBLE ALL LUMBER GRADE STAMPS SHALL REMAIN ON LUMBER AFTER INSTALLATION. CONVENTIONAL LUMBER SHALL MEET DOC PS 20 REQ.
3. PRESSURE TREATED LUMBER: ALL EXPOSED EXTERIOR WOOD AND WOOD BEARING ON CONCRETE OR MASONRY SHALL BE PRESSURE TREATED FIR. ALL NAILS TO PLATES TREATED w/ BORATE MAY BE STANDARD NAILS, FOR ALL OTHER PRESSURE TREATED PLATES, USE HOT DIP GALVANIZED NAILS.
4. PLYWOOD/OSB: EACH WOOD-BASED STRUCTURAL-USE PANEL USED FOR DIAPHRAGM CONSTRUCTION SHALL BE IDENTIFIED BY A REGISTERED STAMP OR BRAND OF AN ICC-APPROVED COMPLIANCE ASSURANCE AGENCY WOOD-BASED STRUCTURAL-USE PANELS SHALL MEET THE REQUIREMENTS OF DOC PS 1 OR PS 2. ALL PANELS SHALL BE GLUED WITH EXTERIOR TYPE GLUE MEETING APA SPECIFICATIONS. PANELS PERMANENTLY EXPOSED TO THE OUTDOORS SHALL BE EXTERIOR TYPE.
5. METAL CONNECTORS: ALL METAL CONNECTORS SHALL BE THOSE MANUFACTURED BY SIMPSON STRONG TIE OR USP LUMBER CONNECTORS. THE NAILS FOR THESE CONNECTORS SHALL BE AS SPECIFIED BY THE MANUFACTURERS FOR CAPACITY OF THE HARDWARE. ALL CALLOUTS REFER TO SIMPSON PRODUCT CODES AND NAMES. REFER TO CROSS REFERENCE TABLES PROVIDED BY USP IN THEIR PRODUCT CATALOGS.
6. FIRE STOPS: PROVIDE FIRE STOPS AT ALL INTERSECTIONS OF STUD WALLS AT FLOOR, CEILING AND ROOF. FIRE STOPS SHALL BE 2x NOMINAL THICKNESS OF WOOD AND SHALL BE THE FULL WIDTH OF THE ENCLOSED SPACE. PLACE FIRESTOPS AT A MAXIMUM SPACING OF 10'-0" IN THE VERTICAL DIRECTION. PROVIDE 2x FIRE STOPS IN ALL FURRED SPACES, VERTICAL AND HORIZONTAL, AND AT A MAXIMUM SPACING OF 10'-0" IN EACH DIRECTION AND AT THE SAME LINES AS FIRE STOPS IN RELATED STUD WALLS.
7. BOLT HOLES: IN WOOD SHALL BE 1/32" TO 1/16" LARGER THAN THE NOMINAL BOLT DIAMETER . ALL BOLTS SHALL HAVE A STANDARD CUT WASHER UNDER HEAD AND NUT UNLESS NOTED OTHERWISE.
8. BOLTS: ALL BOLTS USED FOR WOOD CONNECTIONS SHALL BE ASTM A307, U.N.O. ALL NUTS AND BOLTS SHALL BE RE-TIGHTENED PRIOR TO THE APPLICATION OF SHEATHING, PLASTER, ETC.
9. NOTCHING & CUTTING: STRUCTURAL MEMBERS SHALL NOT BE CUT FOR PIPES, ETC. UNLESS SPECIFICALLY DETAILED. NOTCHING OF HORIZONTAL STRUCTURAL MEMBERS SHALL CONFORM TO THE BUILDING CODE. NOTCHING AND BORING OF STUDS AND TOP PLATES SHALL CONFORM TO THE BUILDING CODE.
10. JOIST BLOCKING: PROVIDE 2x BLOCKING BETWEEN JOISTS AND RAFTERS AT ALL BEARING SUPPORTS U.N.O. CROSS BRIDGING OR SOLID BLOCKING SHALL BE PROVIDED AT 8'-0" O.C. MAXIMUM FOR ALL JOISTS UNLESS BOTH EDGES ARE HELD IN LINE FOR THEIR ENTIRE LENGTH.
11. JOIST HANGERS: FOR I-JOISTS, PROVIDE SIMPSON "IUS" HANGER. FOR CONVENTIONAL JOIST, USE SIMPSON "LUS" HANGER, OR EQUIVALENT.
12. BEAM BEARING: ALL BEAMS TO BE SUPPORTED WITH FULL BEARING UNLESS NOTED OTHERWISE.
13. CONVENTIONAL FRAMING: ALL CONVENTIONAL FRAMED PORTIONS OF THE STRUCTURE ARE TO BE CONSTRUCTED PER **CBC SECTION 2308** .
14. WALLS ON WOOD FLOOR: PROVIDE SINGLE FLOOR JOIST BELOW NON-BEARING, PARALLEL WALLS 10'-0" OR LONGER.
15. FINGER JOINTED STUDS: IT IS STRUCTURALLY ACCEPTABLE TO USE STRUCTURAL GLUED (FINGER-JOINTED) LUMBER. ALL FINGER-JOINTED LUMBER MUST BE "CER EXT JNTS" AND CONFORM WITH THE WWPA'S GLUED PRODUCTS PROCEDURES AND QUALITY CONTROL. FINGER-JOINTED LUMBER IS TO BE STAMPED WITH "CER EXT JNTS" AND MAY BE USED INTERCHANGEABLE WITH ANY SOLID-SAWN LUMBER PRODUCT OF THE SAME SPECIES AND GRADES. PLEASE REFER TO LUMBER SPECIFICATION IN THE STRUCTURAL GENERAL NOTES AND CALCULATIONS.
16. PLATE WASHERS AT NON-SILL PLATE APPLICATION: MINIMUM SIZE FOR SQUARE PLATE WASHERS: (REFER TO PLANS FOR SILL PLATE WASHER REQUIREMENTS.)

PLATE WASHERS NON SILL PLATE APPLICATION	
BOLT SIZE	PLATE WASHER SIZE
1/2"	3" x 2" x 2"
5/8"	3" x 2 1/2" x 2 1/2"
3/4"	3" x 2 1/2" x 2 1/2"
7/8"	3" x 3" x 3"
1"	3" x 3 1/2" x 3 1/2"

MANUFACTURED LUMBER PRODUCTS

1. MANUFACTURED LUMBER: ALL MANUFACTURED SHALL HAVE ICC APPROVAL FOR THE LATEST BUILDING CODE.
2. SIZES & STRENGTH: THE FOLLOWING MINIMUM DESIGN VALUES MUST BE ACHIEVED FOR EACH TYPE OF MANUFACTURED LUMBER SPECIFIED ON THE STRUCTURAL PLANS.

STRUCTURAL COMPOSITE LUMBER			
BEAM TYPE	MINIMUM DESIGN VALUES		
	Fb (PSI)	Fv (PSI)	E (PSI x 10^6)
PSL - PARALLAM	2,900	290	2.2
LVL - MICROLAM	2,600	285	1.9
LSL - TIMBERSTRAND	2,325	310	1.55
RIM - TIMBERSTRAND	1,700	400	1.3

3. I-JOISTS: PROVIDE FLOOR I-JOISTS AS MANUFACTURED BY I-LEVEL OR APPROVED EQUAL. THE FLOOR I-JOIST SIZES NOTED ON PLAN REFERENCE I-LEVEL PRODUCT.
4. FOR UNPROTECTED EXTERIOR APPLICATIONS, CONTRACTOR TO PROVIDE EXTERIOR GRADE PRODUCTS OF EQUIVALENT DESIGN CAPACITY PER MANUFACTURER REQUIREMENTS. CONTRACTOR TO IMMEDIATELY NOTIFY THE STRUCTURAL EOR OF ANY DISCREPANCIES, PRIOR TO THE START OF CONSTRUCTION.

WOOD HARDWARE NAILING SCHEDULE				
HOLDOWNS				
SIMPSON				USP
MODEL NAME	CAPACITY (LBS)	FASTENER SCHEDULE	APPLICATION	MODEL NAME
STHD14	3,500	(24) 10d Nails (0.148" x 3-1/2")	HOLDOWN	
HTT4	4,455	(18) SD #10 1-1/2"	HOLDOWN	
HDU4	4,565	(10) 5/16" x 2-1/2" SDS	HOLDOWN	
HDU5	5,645	(14) 5/16" x 2-1/2" SDS	HOLDOWN	
HDU8	6,765	(20) 5/16" x 2-1/2" SDS	HOLDOWN	
HDU11	9,335	(30) 5/16" x 2-1/2" SDS	HOLDOWN	
HDU14	10,770	(36) 5/16" x 2-1/2" SDS	HOLDOWN	
HD12	11,350	(4) 1" Ø BOLTS	HOLDOWN	
ANCHOR BOLTS				
SSTB20	4,785	5/8"	HOLDOWN ANCHOR	
SSTB24	5,790	5/8"	HOLDOWN ANCHOR	
SSTB28	11,645	7/8"	HOLDOWN ANCHOR	
SB1x30	13,090	1"	HOLDOWN ANCHOR	
HARDWARE				
A34	465	(8) 8d Nails (0.131" x 1-1/2")	AT BLOCKING OR RIM	MPA1
A35	650	(12) 8d Nails (0.131" x 1-1/2")	AT BLOCKING OR RIM	MPA1
LTP4	625	(12) 8d Nails (0.131" x 1-1/2")	AT BLOCKING OR RIM	MP4F
LTP5	565	(12) 8d Nails (0.131" x 1-1/2")	AT BLOCKING OR RIM	MP4F
LS50	560	(8) 8d Nails (0.131" x 1-1/2")	AT BLOCKING OR RIM	MP5
STRAPS				
MODEL NAME	CAPACITY (LBS)	FASTENER SCHEDULE	APPLICATION	MODEL NAME
CS16	1,705	(22) 8d Nails (0.131" x 2-1/2")	DIRECTLY TO TIMBER	RS150
CS16	1,705	(22) 8d Nails (0.131" x 2-1/2")	THRU PLYWOOD	RS150
CS14	2,490	(30) 8d Nails (0.131" x 2-1/2")	DIRECTLY TO TIMBER	
CMSTC16	4,690	(50) 10d Nails (0.148" x 3-1/2")	DIRECTLY TO TIMBER	
CMST14	6,475	(66) 10d Nails (0.148" x 2-1/2")	DIRECTLY TO TIMBER	
CMST12	9,215	(86) 10d Nails (0.148" x 2-1/2")	DIRECTLY TO TIMBER	
SHEAR WALLS				
NAIL TYPE	SHEAR WALL TYPE	NAIL SIZE		
8d COMMON	SW 2, 3, 4, 6	2-1/2" x .131"		
10d COMMON	SW 2B	2-1/4" x .148"		

CONCRETE

1. CONCRETE COMPRESSIVE STRENGTH: ALL CONCRETE SHALL ATTAIN A MINIMUM COMPRESSIVE STRENGTH AS SHOWN IN THE **CONCRETE STRENGTH TABLE** BELOW AT 28 DAYS, U.N.O. ON PLANS. SEE ALSO SULFATE CONTENT NOTES.
2. AGGREGATES IN CONCRETE: SHALL BE NATURAL SAND AND ROCK (150 LB/CU. FT) CONFORMING TO **ASTM C33**. AGGREGATE SHALL HAVE PROVEN SHRINKAGE CHARACTERISTICS OF LESS THAN 0.04% PER **ASTM C-157 & ASTM C1293**. DO NOT CHANGE SOURCE OF AGGREGATE DURING COURSE OF WORK WITHOUT WRITTEN CONSENT OF ENGINEER. MAX AGGREGATE SIZE SHALL BE USED WHENEVER POSSIBLE.
   2.1. PEAGRAVEL MIX OR 3/4" AGGREGATE MIX SHALL NOT BE USED IN CONCRETE MIX USED IN STRUCTURAL APPLICATIONS, EXCEPT IN SHOTCRETE MIX.
3. CEMENT: SHALL BE PORTLAND CEMENT CONFORMING TO **ASTM C150**. CEMENT SHALL BE TYPE II OR AS REQUIRED TO SATISFY SITE SOIL CONDITIONS. REFER TO TABLE 4 FOR CONCRETE CEMENT REQUIREMENTS ON SOIL CONTAINING SULFATE. REFER TO TABLE 2 FOR MAXIMUM WATER TO CEMENT RATIO.
4. CONCRETE MIXES SHALL BE DESIGNED BY A QUALIFIED TESTING LABORATORY AND APPROVED BY THE ENGINEER. MIX DESIGN (TEST HISTORY OR TRIAL BATCH METHOD) IN ACCORDANCE WITH ACI 318 SHALL BE USED TO PROPORTION CONCRETE

CONCRETE STRENGTH				
DESCRIPTION	MIN 28 DAY STRENGTH, f'c	MAX. SLUMP	DENSITY	COMMENTS
SLAB ON GRADE, TYP	3,000 PSI	5"	145 PCF	
FOOTING & GRADE BM, TYP	3,000 PSI	5"	145 PCF	
SLAB ON GRADE, APPARATUS BAY	4,500 PSI	5"	145 PCF	
FOOTING & GRADE BEAM, APPARATUS BAY	4,500 PSI	5"	145 PCF	

5. REBAR CLEAR COVER IN CONCRETE: THE FOLLOWING MINIMUM CLEAR DISTANCES BETWEEN REINFORCING STEEL AND FACE OF CONCRETE SHALL BE MAINTAINED UNLESS NOTED OTHERWISE:

REBAR CLEAR COVER FOR CAST-IN-PLACE CONCRETE MEMBERS			
CONCRETE EXPOSURE	MEMBER	REINFORCEMENT	SPECIFIED COVER
SLAB ON GRADE	ALL	ALL	CENTER OF SLAB OR 2" MIN
CONCRETE AGAINST & PERMANENTLY IN CONTACT WITH GROUND	ALL	ALL	3"
EXPOSED TO WEATHER OR IN CONTACT WITH GROUND	ALL	No. 6 THROUGH No. 18 BARS	2"
		No. 5 BAR, W31 OR D31 WIRE, AND SMALLER	1-1/2"
NOT EXPOSED TO WEATHER OR IN CONTACT WITH GROUND	SLABS, JOISTS, AND WALLS	No. 14 AND No. 18 BARS	1-1/2"
		No. 11 BAR AND SMALLER	3/4"
	BEAMS, COLUMNS, PEDESTALS, AND TENSION TIES	PRIMARY REINFORCEMENT, STIRRUPS, TIES, SPIRALS, AND HOOPS	1-1/2"

6. VIBRATION: VIBRATION OF CONCRETE SHALL BE IN ACCORDANCE WITH GENERAL PROVISIONS OUTLINED IN PORTLAND CEMENT ASSOCIATION SPECIFICATION S26.
7. CURING: CONCRETE SHALL BE MAINTAINED AT IN A MOIST CONDITION FOR A MINIMUM OF FIVE DAYS AFTER ITS PLACEMENT. FOR CONCRETE OTHER THAN SLAB ON GRADE, APPROVED CURING COMPOUNDS MAY BE USED IN LIEU OF MOIST CURING. ONLY IF APPROVED BY THE ENGINEER OR ARCHITECT.
8. INSPECTIONS, TESTING & QUALITY ASSURANCE: REFER TO STRUCTURAL NOTE SHEETS FOR DEPUTY SPECIAL INSPECTION, TESTING & STRUCTURAL OBSERVATION REQUIREMENTS. A MINIMUM OF ONE COMPRESSION TEST AT 7 DAYS AND 2 TESTS AT 28 DAYS FOR ALL CONCRETE SAMPLES. TAKE TEST AT A FREQUENCY OF ONCE EVERY 150 CU. YDS OR 5,000 SQ. FT MINIMUM.
9. ANCHOR BOLTS, DOWELS, INSERTS: SHALL BE TIED IN PLACE PRIOR TO POURING CONCRETE.
10. CONSTRUCTION AND POUR JOINTS: LOCATIONS SHALL BE APPROVED BY ENGINEER PRIOR TO POURING CONCRETE.
11. FLY ASH: SHALL BE LIMITED TO NO MORE THAN 30 PERCENT OF THE TOTAL WEIGHT OF CEMENTITIOUS MATERIALS IN THE CONCRETE , U.N.O., CONTRACTOR SHALL TAKE INTO EFFECT THE SLOWER CONCRETE CURING TIMES
12. FORMWORK: FORMWORK TOLERANCE SHALL IN ACCORDANCE WITH THE C.B.C. AND A.C.I. STANDARDS.
13. HOT AND COLD WEATHER CONCRETING:
    13.1. HOT WEATHER CONCRETING: WHEN AIR TEMPERATURE RISES ABOVE 80° F AND HUMIDITY FALLS BELOW 25, THE CONTRACTOR SHALL FOLLOW HOT WEATHER CONCRETING IN ACCORDANCE WITH ACI 305.1. CONTRACTOR SHALL BE PREPARED TO USE FOG SPRAY OR OTHER PRECAUTIONS ACCEPTABLE TO ARCHITECT WHEN RATE OF EVAPORATION EQUALS OR EXCEEDS 0.2 POUNDS PER SQUARE FOOT PER HOUR.
    13.2. COLD WEATHER CONCRETING: ADEQUATE EQUIPMENT SHALL BE PROVIDED FOR HEATING CONCRETE MATERIALS AND PROTECTING CONCRETE DURING FREEZING OR NEAR FREEZING WEATHER. ALL CONCRETE MATERIALS AND ALL REINFORCEMENT, FORMS FILLERS AND GROUND WITH WHICH THE CONCRETE IS TO CONTACT SHALL BE FREE FROM FROST. FROZEN MATERIAL OR MATERIALS CONTAINING ICE SHALL NOT BE USED. COLD WEATHER CONCRETING SHALL BE DONE IN ACCORDANCE WITH **ACI 306 R. (LATEST EDITION)**
14. PIPES IN CONCRETE: PIPES MAY PASS THROUGH STRUCTURAL CONCRETE IN SLEEVES, BUT SHALL NOT BE EMBEDDED THEREIN. PIPES OR DUCTS EXCEEDING ONE-THIRD THE SLAB OR WALL THICKNESS SHALL NOT BE PLACED IN THE STRUCTURAL CONCRETE UNLESS SPECIFICALLY DETAILED AND INDICATED ON THE CONSTRUCTION DRAWINGS OR APPROVED IN WRITING BY THE ENGINEER. REINFORCING WHICH MAY CONFLICT SHALL NOT BE CUT UNLESS APPROVED IN WRITING BY THE ENGINEER.
15. EXPOSED CORNERS: PROVIDE 3/4" CHAMFERS AT ALL EXPOSED CORNERS.
16. ARCHITECTURAL DETAILS: REFER TO ARCHITECTURAL DRAWINGS FOR REVEALS, AREAS OF TEXTURED CONCRETE OR SPECIAL FINISHES, ITEMS REQUIRED TO BE CAST INTO THE CONCRETE, CURBS AND SLAB DEPRESSIONS.
17. DRYPACK OR NON-SHRINK GROUT: SHALL HAVE A MINIMUM COMPRESSIVE STRENGTH OF 8,000 PSI AND SHALL NOT BE LESS THAN THE CONCRETE STRENGTH, AND SHALL BE COMPOSED OF ONE PART PORTLAND CEMENT TO NOT MORE THAN THREE PARTS SAND. NON-SHRINK GROUT SHALL CONFORM TO **ASTM C109**
18. WHERE CONCRETE IS PLACED AGAINST EXISTING CONCRETE SURFACES. THE EXISTING CONCRETE SHALL BE THOROUGHLY CLEANED AND ROUGHED TO A MINIMUM AMPLITUDE OF 1/4" INCH. A CONCRETE BONDING AGENT SHALL BE APPLIED TO THE EXISTING CONCRETE SURFACE, U.N.O.

EARTHWORK AND FOUNDATIONS

1. GEOTECHNICAL REPORT: PERFORM SOILS WORK COMPLYING WITH FOUNDATION DESIGN BASED ON RECOMMENDATIONS IN SOILS REPORT. SEE STRUCTURAL COVER SHEET FOR SOILS REPORT NUMBER AND DATE.
2. ALLOWABLE FOUNDATION DESIGN VALUES PER GEOTECHNICAL REPORT: VALUES BELOW MAY BE INCREASED 33 PERCENT FOR TRANSIENT LOADING.
   A. BEARING CAPACITY: SEE PROJECT DESIGN CRITERIA
   B. PASSIVE LATERAL BEARING PRESSURE: SEE PROJECT DESIGN CRITERIA
   C. COEFFICIENT OF FRICTION: SEE PROJECT DESIGN CRITERIA
3. GRADING, EXCAVATIONS, BACKFILL AND COMPACTION OF BACKFILL: COMPLY WITH GEOTECHNICAL REPORT AND REQUIREMENTS OF GOVERNING CODE AUTHORITY AND PERFORMED ONLY UNDER CONTINUOUS SPECIAL INSPECTION OF GEOTECHNICAL ENGINEER.
4. PREPARATION OF SOIL UNDER BUILDING PAD: SEE GEOTECHNICAL REPORT FOR OVER-EXCAVATION OF EXISTING SOIL AND INSTALLATION OF PROPERLY COMPACTED BACKFILL.
5. FOUNDATION EXCAVATIONS: FOUNDATIONS ARE TO BEAR ON FIRM EXISTING SOIL OR APPROVED COMPACTED FILL AS INDICATED IN GEOTECHNICAL REPORT. EXCAVATIONS ARE TO BE INSPECTED BY GEOTECHNICAL ENGINEER PRIOR TO PLACEMENT OF REINFORCING STEEL AND FORMWORK. ENSURE EXCAVATIONS ARE CLEANS, DRY AND FREE OF DEBRIS OR LOOSE SOIL. SLOPE SIDES OF EXCAVATION NOT LESS THAN MINIMUM SLOPE INDICATED IN GEOTECHNICAL REPORT. CAST CONCRETE DIRECTLY AGAINST EXCAVATED SURFACES.
6. BACKFILLING OF RETAINING WALLS: PLACE AFTER COMPLETION AND INSPECTION OF WATERPROOFING. ADEQUATELY SHORE RETAINING WALLS DURING BACKFILL OPERATION. UNLESS ADEQUATELY SHORED, DO NOT PLACE BACKFILL BEHIND BUILDING STRUCTURE RETAINING WALLS (EXCLUDING SITE RETAINING WALLS) UNTIL CONCRETE AT ELEVATED FLOOR LEVELS ADJACENT TO WALLS ARE COMPLETELY POURED (IN AREA) AND HAVE CURED FOR AT LEAST 7 DAYS.
7. WATER EXPOSURE AT BUILDING PERIMETER FOOTINGS: AT AREAS WHERE SIDEWALKS OR PAVING DO NOT IMMEDIATELY ADJOIN STRUCTURE, PROVIDE POSITIVE DRAINAGE AWAY FROM STRUCTURE AT BUILDING PERIMETER. LANDSCAPE IRRIGATION IS NOT PERMITTED WITHIN FIVE FEET OF BUILDING PERIMETER FOOTINGS EXCEPT WHEN ENCLOSED IN PROTECTED PLANTERS WITH DIRECT DRAINAGE AWAY FROM STRUCTURE OR WHICH COMPLIES WITH APPLICABLE CODE. DISCHARGE FROM DOWN SPOUTS, ROOF DRAINS AND SCUPPERS IS NOT PERMITTED ONTO UNPROTECTED SOILS WITHIN FIVE FEET OF BUILDING PERIMETER. REFER TO GEOTECHNICAL REPORT FOR COMPLETE REQUIREMENTS.

ABBREVIATIONS

#	NUMBER OR POUND	EF	EACH FACE

QUALITY ASSURANCE (STRUCTURAL OBSERVATION, MATERIALS TESTING, AND SPECIAL INSPECTION)

1. STRUCTURAL OBSERVATION:
   - A. COORDINATION RESPONSIBILITIES OF CONTRACTOR: NOTIFY ARCHITECT (STRUCTURAL ENGINEER) 48 HOURS IN ADVANCE OF CRITICAL STAGES OF CONSTRUCTION INDICATED BELOW. SO VISITS MAY BE SCHEDULED BY STRUCTURAL OBSERVER. FAILURE BY CONTRACTOR TO MEET OBSERVATION SCHEDULE MAY REQUIRE REMOVAL OF SUBSEQUENT WORK FOR OBSERVATION. CONTRACTOR TO BEAR COSTS OF REMOVAL AND REPLACEMENT OF FINISHED WORK OR FRAMING DAMAGED BY REMOVAL PROCESS OR AS REQUIRED FOR CORRECTIVE ACTION.
   - B. PRE-CONSTRUCTION MEETING: OWNER MAY COORDINATE AND CALL FOR MEETING BETWEEN ARCHITECT (STRUCTURAL ENGINEER) RESPONSIBLE FOR STRUCTURAL DESIGN, STRUCTURAL OBSERVER, CONTRACTOR, AFFECTED SUBCONTRACTORS AND SPECIAL INSPECTOR. STRUCTURAL OBSERVER WILL PRESIDE OVER THIS MEETING. PURPOSE OF MEETING IS TO IDENTIFY MAJOR STRUCTURAL ELEMENTS AND CONNECTIONS THAT AFFECT VERTICAL AND LATERAL LOAD RESISTING SYSTEMS OF STRUCTURE AND TO REVIEW SCHEDULE OF STRUCTURAL OBSERVATION, MATERIALS TESTING, AND SPECIAL INSPECTION OF PROJECT.
   - C. CRITICAL STAGES OF CONSTRUCTION REQUIRING STRUCTURAL OBSERVATION:
     - I. CASTING OF CONCRETE
     - II. COVERING OF FRAMING

2. MILL TEST REPORTS CERTIFYING MATERIALS: CONTRACTOR TO SUBMIT MILL TEST REPORTS CERTIFYING REINFORCING STEEL, STRESSING TENDONS, AND STRUCTURAL STEEL ARE OF IDENTIFIABLE TESTED STOCK TO OWNER, SPECIAL INSPECTOR, ARCHITECT (STRUCTURAL ENGINEER) AND, UPON REQUEST, TO GOVERNING CODE AUTHORITY. ENSURE MATERIALS ARE PROPERLY TAGGED FOR IDENTIFICATION. IF MILL TEST REPORTS CANNOT BE MADE AVAILABLE OR IF MATERIAL CANNOT BE IDENTIFIED, TESTING LABORATORY WILL PERFORM TESTS AS DIRECTED BY ARCHITECT (STRUCTURAL ENGINEER). CONTRACTOR SHALL PAY TESTING RELATED TO TESTS AND INSPECTIONS OF UNIDENTIFIABLE MATERIALS FURNISHED WITHOUT MILL LABORATORY FOR COSTS TEST REPORTS, MATERIALS FOUND DEFICIENT AFTER INITIAL TESTS AND INSPECTIONS, OR MATERIALS REPLACING DEFICIENT MATERIALS.
   - A. ULTRASONIC EXAMINATION OF HEAVY ROLLED SHAPES AND THICK PLATES AT PROPOSED WELDED MOMENT CONNECTIONS: WHERE COMPLETE PENETRATION GROOVE WELDS OCCUR AT GROUPS 4 AND 5 STRUCTURAL STEEL SHAPES, AS DEFINED IN ASTM A6, AND PLATES EXCEEDING 2 INCHES THICK, SUBMIT MILL TEST REPORTS TO ARCHITECT (STRUCTURAL ENGINEER) AND, UPON REQUEST, TO GOVERNING CODE AUTHORITY. MILL TEST REPORTS SHALL CERTIFY THAT CHARPY V-NOTCH TESTING WAS CONDUCTED IN COMPLIANCE WITH ASTM A6, SUPPLEMENTARY REQUIREMENT S5, INCLUDING IMPACT TEST COMPLYING WITH ASTM A673 AT FREQUENCY P WITH MINIMUM AVERAGE VALUE OF 20 FT.-LBS. ABSORBED ENERGY AT 70 DEGREES FAHRENHEIT.

3. CERTIFICATE OF COMPLIANCE FOR OFFSITE FABRICATION: SUBMIT FOR STRUCTURAL STEEL, GLU-LAMS, AND PLYWOOD-WEB JOISTS, PRECAST CONCRETE IN COMPLIANCE WITH APPLICABLE CODE SECTION 1701.7. SUBMIT TO OWNER, TESTING LABORATORY, ARCHITECT (STRUCTURAL ENGINEER) AND GOVERNING CODE AUTHORITY.

4. WELD TESTING AND INSPECTION: TESTING LABORATORY WILL SUBMIT WELD TEST RESULTS TO OWNER, CONTRACTOR, ARCHITECT (STRUCTURAL ENGINEER) AND, UPON REQUEST, TO GOVERNING CODE AUTHORITY. SEE SPECIFICATIONS FOR TESTING REQUIREMENTS NOT INDICATED ON STRUCTURAL DRAWINGS.

   A. STRUCTURAL STEEL WELDING NOT DESTRUCTIVE TESTING REQUIREMENTS: APART FROM VISUAL INSPECTION AND REVIEW OF FABRICATION AND ERECTION REPORTS OF FABRICATOR/ERECTOR'S OWN QUALITY CONTROL TESTING AND INSPECTION, OWNER'S TESTING LABORATORY WILL PERFORM INDICATED SHOP AND FIELD INSPECTION AND TESTING. TESTING LABORATORY WILL BE AWS CERTIFIED AND WILL PROVIDE INSPECTORS FOR CONTINUOUS INSPECTION OF STEEL FABRICATION AND ERECTION AND STRUCTURAL WELDING. SHOP AND FIELD TESTING OF MATERIALS AND WELDING WILL BE AS FOLLOWS:
     - I. COMPLETE JOINT PENETRATION WELDS: FOR STRUCTURES IN RISK CATEGORY III OR IV ULTRASONIC TESTING (UT) SHALL BE PERFORMED BY QA ON ALL CJP GROOVE WELDS SUBJECT TO TRANSVERSELY APPLIED TENSION LOADING IN BUTT, T- AND CORNER JOINTS, IN MATERIALS 5/16 IN. THICK OR GREATER. FOR STRUCTURES IN RISK CATEGORY II, UT SHALL BE PERFORMED BY QA ON 10% OF CJP GROOVE WELDS IN BUTT, T- AND CORNER JOINTS SUBJECT TO TRANSVERSELY APPLIED TENSION LOADING, IN MATERIALS 5/16 IN THICK OR GREATER. FOR STRUCTURES IN RISK CATEGORY I, NDT OF CJP GROOVE WELDS IS NOT REQUIRED. FOR ALL STRUCTURES IN ALL RISK CATEGORIES, NDT OF CJP GROOVE WELDS IN MATERIALS LESS THAN 5/16 IN THICK IS NOT REQUIRED.
     - II. ACCESS HOLES: THERMALLY CUT SURFACES OF ACCESS HOLES SHALL BE TESTED BY QA USING MT OR PT, WHEN THE FLANGE THICKNESS EXCEEDS 2 IN. (50 MM) FOR ROLLED SHAPES, OR WHEN THE WEB THICKNESS EXCEEDS 2 IN FOR BUILT-UP SHAPES. ANY CRACK SHALL BE DEEMED UNACCEPTABLE REGARDLESS OF SIZE OR LOCATION.

5. CONTINUOUS SPECIAL INSPECTION: UNLESS OTHERWISE INDICATED, CONTINUOUS SPECIAL INSPECTION WILL BE PERFORMED BY SPECIAL INSPECTOR COMPLYING WITH APPLICABLE CODE SECTION 1701 AND SPECIFICALLY APPROVED BY GOVERNING CODE AUTHORITY FOR EACH INSPECTION CATEGORY BELOW. PERIODIC INSPECTION IS NOT PERMITTED UNLESS INDICATED IN THE PROGRAM OR OTHERWISE ACCEPTED BY ARCHITECT (STRUCTURAL ENGINEER). SEE SPECIFICATIONS FOR ADDITIONAL SPECIAL INSPECTION REQUIREMENTS.

ENGINEER OF RECORD - STRUCTURAL OBSERVATION PROGRAM

STRUCTURAL OBSERVATIONS FOR SEISMIC & WIND RESISTANCE:

1. THE OWNER SHALL EMPLOY THE ENGINEER OR ARCHITECT REGISTERED/LICENSED IN THE STATE OF CALIFORNIA WHO IS RESPONSIBLE FOR THE STRUCTURAL DESIGN TO PERFORM STRUCTURAL OBSERVATION(S).

   ENGINEER IN RESPONSIBLE CHARGE/ENGINEER OF RECORD:

   NAME: SHAWN LOTHROP, SE
   LIC #: S5627

   OBSERVER DESIGNATED BY E.O.R. RESPONSIBLE FOR STRUCTURAL OBSERVATION(S):

   NAME: SHAWN LOTHROP, SE
   LIC #: S5627

2. STRUCTURAL OBSERVATIONS SHALL BE PERFORMED AS REQUIREED BY THE GOVERNING CODE. STRUCTURAL OBSERVATION SHALL BE PERFORMED FOR THE FOLLOWING ITEMS & AT THE FOLLOWING STAGES OF CONSTRUCTION AS LISTED BELOW:

OBSERVATION ITEM	STAGE
FOUNDATION STEEL REINFORCING	PRIOR TO CONCRETE POUR
MATELINE & MODULAR CONNECTIONS	DURING MODULAR SET
ROOF & WALL FRAMING MEMBERS	AFTER ROOF DIAPHRAGM IS COMPLETE PRIOR TO ROOFING

3. PRIOR TO COMMENCEMENT OF OBSERVATION, THE STRUCTURAL OBSERVER SHALL SUBMIT TO THE BUILDING DEPARTMENT A WRITTEN STATEMENT IDENTIFYING THE FREQUENCY AND EXTENT OF THE STRUCTURAL OBSERVATION.

4. AT THE CONCLUSION OF WORK, THE STRUCTURAL OBSERVER SHALL SUBMIT TO THE BUILDING DEPARTMENT A WRITTEN STATEMENT THAT THE STRUCTURAL OBSERVATION VISITS HAVE BEEN MADE AND IDENTIFY ANY REPORTED DEFICIENCIES WHICH, TO THE BEST OF THE STRUCTURAL OBSERVER'S KNOWLEDGE, HAVE NOT BEEN RESOLVED.

5. STRUCTURAL OBSEVATION DOES NOT INCLUDE OR WAIVE THE INSPECTIONS REQUIRE BY THE GOVERNING CODE

DEPUTY SPECIAL INSPECTOR

1. DEPUTY SPECIAL INSPECTIONS SHALL BE PROVIDED BY:

   NAME:
   PHONE NUMBER:

2. SPECIAL INSPECTOR SHALL BE HIRED BY THE OWNER TO PROVIDE SPECIAL INSPECTIONS AS REQUIRED PER THE PLANS.

3. SPECIAL INSPECTOR: A QUALIFIED PERSON, EMPLOYED BY THE OWNER, WHO HAS DEMONSTRATED COMPETENCE TO THE SATISFACTION OF THE BUILDING OFFICIAL FOR INSPECTION OF THE PARTICULAR TYPE OF CONSTRUCTION OR OPERATION REQUIRING SPECIAL INSPECTION. DUTIES INCLUDE VISUAL INSPECTIONS AND FIELD MEASUREMENTS OF MATERIALS, OBTAINING SPECIMENS FOR TESTS AND RELATED ACTIONS INCLUDING PREPARATION OF REPORTS.

4. CONTINUOUS INSPECTION: ON SITE INSPECTION BY THE SPECIAL INSPECTOR ON A CONTINUOUS BASIS OBSERVING ALL WORK REQUIRING SPECIAL INSPECTION.

5. PERIODIC INSPECTION: INTERMITTENT INSPECTION AS PERMITTED BY THE PLAN, SPECIFIED AT PRE-DETERMINED INTERVALS OR MORE FREQUENTLY AS WORK PROGRESSES. NO SIGNIFICANT ELEMENTS OR AREAS SHALL BE COVERED BY ADDITIONAL WORK UNTIL APPROVED BY THE BUILDING OFFICIAL AND/OR SPECIAL INSPECTOR.

6. REPORTS SHALL BE SUBMITTED TO THE BUILDING OFFICIAL IN A TIMELY MANNER AS DETERMINED BY THE BUILDING OFFICIAL.

MASONRY

1. SPECIFIED COMPRESSIVE STRENGTH OF MASONRY (f'm): 1,500 PSI TYPICAL UNLESS NOTED OTHERWISE.

2. VERIFYING SPECIFIED COMPRESSIVE STRENGTH OF MASONRY (f'm): USE MASONRY PRISM TESTING METHODS UNLESS OTHERWISE ACCEPTABLE TO ARCHITECT (STRUCTURAL ENGINEER). FULL ALLOWABLE STRESSES ARE USED IN DESIGN. SUBMIT MASONRY PRISM DATA FOR EACH TYPE AND COMPRESSIVE STRENGTH OF MASONRY REQUIRED, WITH A PROFESSIONAL ENGINEER'S SIGNATURE AND STATE OF CALIFORNIA SEAL, TO ARCHITECT (STRUCTURAL ENGINEER). COMPLIANCE WITH MINIMUM REQUIRED COMPRESSIVE STRENGTH SHALL BE BASED ON APPLICABLE CODE **SECTION 2105.3.**

3. CONCRETE BLOCK: ASTM C90, MEDIUM WEIGHT, GRADE N-I AND APPLICABLE CODE STANDARD 21-4 ATTAINING A MINIMUM COMPRESSIVE STRENGTH AS REQUIRED TO MEET SPECIFIED COMPRESSIVE STRENGTH OF MASONRY (f'm).

4. FACE BRICK: ASTM C216 AND APPLICABLE CODE STANDARD 21-1.

5. PORTLAND CEMENT FOR MORTAR AND GROUT: ASTM C150, TYPE I OR II. USE OF MASONRY CEMENT OR PLASTIC CEMENT IS NOT PERMITTED.

6. AGGREGATES FOR MORTAR AND GROUT:
   - A. AGGREGATES FOR MORTAR: ASTM C144.
   - B. AGGREGATES FOR GROUT: C404, COARSE TYPE.

7. MORTAR: ASTM C270, TYPE S. MIX IN PROPORTIONS ACCORDING TO APPLICABLE CODE TABLE 21-A TYPE S. (2,000 PSI MINIMUM).

8. GROUT: ASTM C476, COARSE TYPE, ATTAINING A MINIMUM COMPRESSIVE STRENGTH AS REQUIRED TO MEET SPECIFIED COMPRESSIVE STRENGTH OF MASONRY (f'm). HOWEVER, IN NO CASE SHALL GROUT COMPRESSIVE STRENGTH BE LESS THAN 2,000 PSI AT 28 DAYS.

9. REINFORCING STEEL: REINFORCING STEEL SECTION OF GENERAL NOTES UNLESS INDICATED OTHERWISE.

10. COMPOSITE MASONRY WALL PENETRATION SUBMITTAL: SUBMIT FOR EACH WALL INDICATING SIZE AND LOCATION OF EACH WALL PENETRATION AND OPENING AS NECESSARY BY AFFECTED TRADES. SUBMIT TOGETHER WITH APPROPRIATE REINFORCING STEEL SHOP DRAWINGS. SUBMIT WRITTEN STATEMENT FROM SPECIAL INSPECTOR THAT NO ADDITIONAL PENETRATIONS OR OPENINGS WERE ADDED TO THOSE SHOWN IN PENETRATION SUBMITTAL.

11. REINFORCING STEEL SPLICES: LAP REINFORCING STEEL AT SPLICES A MINIMUM OF 48 BAR DIAMETERS, EXCEPT DOWELS IN FOOTINGS AT BASE OF WALLS SHALL SPLICE A MINIMUM OF 72 BAR DIAMETERS, UNLESS NOTED OTHERWISE. WHERE MINIMUM CLEAR DISTANCE BETWEEN BARS AT ADJACENT SPLICES IS 3 INCHES OR LESS, INCREASE LAP LENGTH 30 PERCENT UNLESS SPLICES ARE STAGGERED AT LEAST 24 BAR DIAMETERS.

12. DOWELS FOR WALLS, COLUMNS, PILASTERS, AND PIERS: MATCH SIZE AND SPACING OF VERTICAL REINFORCING STEEL, UNLESS NOTED OTHERWISE. SET DOWELS TO ALIGN WITH CELLS CONTAINING REINFORCING STEEL.

13. MINIMUM REINFORCING STEEL CLEARANCES:
   - A. MINIMUM CLEARANCES BETWEEN REINFORCING AND OUTSIDE FACE OF MASONRY: 2" EXCEPT IN NO CASE SHALL CLEARANCE BE LESS THAN 1 $\frac{1}{2}$ db.
   - B. MINIMUM CLEARANCE BETWEEN REINFORCING AND INSIDE FACE OF GROUT CELL: $\frac{1}{2}$"
   - C. MINIMUM CLEARANCE DISTANCE BETWEEN PARALLEL REINFORCING: 1" OR db, WHICHEVER IS LESS. INCREASE TO 1 $\frac{1}{2}$" OR 1 $\frac{1}{2}$ db, WHICHEVER IS LESS, AT COLUMNS, PILASTERS, AND PIERS ONLY.

14. PLACEMENT: SET COURSES IN RUNNING BOND PATTERN UNLESS INDICATE OTHERWISE. SET CELLS IN VERTICAL ALIGNMENT. PROVIDE FLUSH MORTAR JOINTS AT SURFACES TO RECEIVE WATERPROOFING OR DAMP-PROOFING.

15. GROUTING: GROUT SOLID ALL CELLS. MECHANICALLY VIBRATE GROUT IN CELLS.
   - A. GROUT HEIGHT LIMITS: APPLICABLE CODE TABLE 21-G
   - B. HORIZONTAL CONSTRUCTION JOINTS: HOLD GROUT 1 1/2 INCHES BELOW TOP OF MASONRY UNIT IF WORK IS STOPPED ONE HOUR OR LONGER.
   - C. GROUT COVER AROUND REINFORCING STEEL: ANCHOR BOLTS AND INSERTS PENETRATING MASONRY SHELL: 1" MINIMUM.

16. HORIZONTAL BAR TERMINATING AT WALL ENDS AND OPENING JAMS: EXTEND BARS TO WITHIN 2 INCHES OF END OF WALL AND PROVIDE STANDARD AI 90-DEGREE HOOK UNLESS DETAILED OTHERWISE.

STRUCTURAL STEEL NOTES

1. FABRICATION & ERECTION: ALL FABRICATION & ERECTION SHALL CONFORM TO THE LATEST STANDARDS OF THE AMERICAN INSTITUTE OF STEEL CONSTRUCTION (AISC) SPECIFICATIONS FOR STRUCTURAL STEEL BUILDINGS.

2. ASTM SPECIFICATIONS: STRUCTURAL STEEL SHALL CONFORM TO THE FOLLOWING ASTM SPECIFICATIONS:

TABLE 1 - STEEL MATERIAL SPECIFICATIONS

STEEL SHAPE	ASTM SPECIFICATION
W	A992 OR A572 GRADE 50
M, S, HP	A36 OR A572 GRADE 50
C - CHANNEL	A572 GRADE 50
L - ANGLE	A36
PLATES & BAR	A36
STEEL PIPE	A53 GRADE B
ROUND HSS	A500 GRADE B OR C
SQ. & RECT. HSS	A500 GRADE B OR C
MACHINE BOLTS	A325, A490, F1852, F2280
NUTS	A563, A194
WASHERS	F436
ANCHOR RODS	F1554-A36
SHEAR STUDS	A108

3. STEEL EXPOSED TO WEATHER OR CORROSIVE ENVIRONMENT: ALL STEEL EXPOSED TO WEATHER OR CORROSIVE ENVIRONMENT SHALL BE HOT DIP GALVANIZED AFTER FABRICATION IN COMPLIANCE WITH ASTM A123. ALL FIELD WELDS ON GALVANIZED STEEL SHALL BE TREATED WITH ZINC-RICH PAINT IN COMPLIANCE WITH ASTM A780.

4. STEEL FABRICATION: ALL STEEL FABRICATION SHALL BE PERFORMED IN A SHOP APPROVED BY THE GOVERNING JURISDICTION DEPARTMENT OF BUILDING & SAFETY.

5. STEEL FABRICATOR: THE STRUCTURAL STEEL FABRICATOR SHALL PROVIDE A SET OF SHOP FABRICATION DRAWINGS FOR APPROVAL TO THE ENGINEER OF RECORD. THE FABRICATOR SHALL NOT FABRICATE THE STEEL UNTIL THE ENGINEER OF RECORD HAS APPROVED THE SHOP DRAWINGS.

6. WELDING: ALL WELDING SHALL BE IN CONFORMANCE WITH THE LATEST AISC & AMERICAN WELDING SOCIETY (AWS) STANDARDS. ALL WELDING SHALL BE PERFORMED USING A SHIELDED ARC PROCESS USING APPROVED ELECTRODES CONFORMING TO AWS SPECIFICATION E70XX (LOW HYDROGEN). WELD MATERIAL SHALL COMPLY WITH AWS CERTIFICATION AND POSSESS A CHARPY V-NOTCH TOUGHNESS OF 20 FT-LBS AT -20 DEGREES F. WELDING SHALL BE PERFORMED BY ONLY AWS CERTIFIED WELDERS.

7. WELDING PROCEDURES: A WRITTEN WELDING PROCEDURE SPECIFICATIONS (WPS) PER AWS D1.1 SHALL BE DEVELOPED BY THE FABRICATOR/ERECTOR AND REVIEWED BY THE ENGINEER OF RECORD AND THE BUILDING DEPARTMENT.

8. ERECTION AIDS: THE CONTRACTOR SHALL BE RESPONSIBLE FOR ALL ERECTION AIDS AND JOINT PREPARATIONS THAT INCLUDE, BUT ARE NOT LIMITED TO, ERECTION ANGLES, LIFT HOLES AND OTHER AIDS, WELDING PROCEDURES, REQUIRED ROOT OPENINGS, ROOT FACE DIMENSIONS, GROOVE ANGLES, BACKING BARS, COPES, SURFACE ROUGHNESS AND UNEQUAL PARTS.

9. FIELD WELDING: FIELD WELDING SHALL BE PERFORMED BY A BUILDING DEPARTMENT CERTIFIED WELDERS. FIELD WELDING REQUIRES CONTINUOUS SPECIAL INSPECTION. PERIODIC FIELD SPECIAL INSPECTION IS ACCEPTABLE FOR FLOOR AND ROOF DECK WELDING, STUD WELDING & WELDING OF STAIR/HANDRAIL SYSTEMS.

10. BOLTING: BOLTING OF STRUCTURAL STEEL SHALL MEET THE RESEARCH COUNCIL ON STRUCTURAL CONNECTIONS (RCSC) 2000 EDITION SPECIFICATIONS FOR STRUCTURAL JOINTS USING A325 & A490 BOLTS FOR TYPES X, N & SC.

11. CAMBER: ALL STEEL BEAMS SHALL HAVE STANDARD MILL CAMBER UNLESS NOTED OTHERWISE ON THE STRUCTURAL PLANS.

NAILS

1. DIAPHRAGM NAILING: ALL FLOOR SHEATHING, ROOF SHEATHING AND SHEAR PANELS CONSTRUCTED USING WOOD-BASED STRUCTURAL-USE PANELS SHALL BE FASTENED WITH COMMON NAILS. HARDWARE SHALL BE NAILED PER MANUFACTURER'S REQUIREMENTS, OTHERWISE SHORT NAILS MAY BE USED. NAILING SHALL BE PER THE BUILDING CODE UNLESS NOTED OTHERWISE ON THE PLANS OR DETAILS.

2. NAIL GUNS: MUST BE EQUIPPED WITH A FLUSH NAILER ATTACHMENT FOR NAILING OF PLYWOOD SHEAR WALLS, FLOOR SHEATHING AND ROOF SHEATHING.

3. NAIL MANUFACTURING: ALL NAILS MUST BE DOMESTICALLY MANUFACTURED & MEET THE REQUIREMENTS OF THE CURRENT BUILDING CODE.

4. GALVANIZED NAILS: ALL NAILS INTO PRESSURE TREATED LUMBER SHALL BE HOT DIPPED GALVANIZED OR OTHER APPROVED COATING TO RESIST CORROSION UNLESS PRESSURE TREATED PLATE IS TREATED WITH BORATE.

FLOOR JOIST SPECIFICATIONS

I-JOISTS SPECIFIED AS TYPE "A" SERIES

MANF	TYPE	SIZE - DEPTH (IN)
TJI	110	9$\frac{1}{2}$, 11$\frac{7}{8}$, 14
	210	16
LP	20W	9$\frac{1}{2}$, 11$\frac{7}{8}$, 14
	32W	16
BCI	5000	9$\frac{1}{2}$, 11$\frac{7}{8}$
	6000	14
	6500	16
RFPI	20	9$\frac{1}{2}$, 11$\frac{7}{8}$
	400	14, 16
GP	40	9$\frac{1}{2}$, 11$\frac{7}{8}$, 14
	65	16
WI	40	9$\frac{1}{2}$, 11$\frac{7}{8}$, 14
	60	16

I-JOISTS SPECIFIED AS TYPE "B" SERIES

MANF	TYPE	SIZE - DEPTH (IN)
TJI	210	9$\frac{1}{2}$, 11$\frac{7}{8}$, 14
	230	16
LP	20W	9$\frac{1}{2}$, 11$\frac{7}{8}$, 14
	32W	16
BCI	6000	9$\frac{1}{2}$, 11$\frac{7}{8}$, 14
	6500	16
RFPI	30	9$\frac{1}{2}$, 11$\frac{7}{8}$
	400	14
	50	16
GP	40	9$\frac{1}{2}$, 11$\frac{7}{8}$, 14
	65	16
WI	40	9$\frac{1}{2}$, 11$\frac{7}{8}$, 14
	60	16

I-JOISTS SPECIFIED AS TYPE "C" SERIES

MANF	TYPE	SIZE - DEPTH (IN)
TJI	230	ALL
LP	32W	ALL
BCI	6500	ALL
RFPI	400	9$\frac{1}{2}$, 11$\frac{7}{8}$
	70	14
	90	16
GP	40	9$\frac{1}{2}$, 11$\frac{7}{8}$, 14
	65	16
WI	40	9$\frac{1}{2}$, 11$\frac{7}{8}$
	60	14, 16

I-JOISTS SPECIFIED AS TYPE "D" SERIES

MANF	TYPE	SIZE - DEPTH (IN)
TJI	360	11$\frac{7}{8}$, 14, 16
LP	36	11$\frac{7}{8}$, 14, 16
BCI	60	11$\frac{7}{8}$, 14, 16
RFPI	70	11$\frac{7}{8}$
	90	14, 16
GP	65	11$\frac{7}{8}$, 14, 16
WI	60	11$\frac{7}{8}$
	80	14, 16

I-JOIST MANUFACTURERS
TJI = TRUS JOIST
LP = LOUISIANA PACIFIC
BCI = BOISE CASCADE
RFPI = ROSEBURG FOREST
GP = GEORGIA PACIFIC
WI = GEORGIA PACIFIC

I-JOIST ICC NUMBERS
TJI: ESR-1153
LP: ESR-1130
BCI: ESR-1336
RFPI: ESR-1251
GP: ESR-1035
WI: ESR-1225

PROPRIETARY ANCHORAGES AND FASTENERS

1. EPOXY ANCHORS SHALL USE THREADED STEEL RODS CONFORMING TO ASTM-F1554, GRADE 36, OR REINFORCING STEEL CONFORMING TO ASTM A615 OR A706, GRADE 60, UNLESS NOTED OTHERWISE. INSTALLERS TO BE CERTIFIED BY MANUFACTURER.

2. ACCEPTABLE PRODUCTS AS INDICATED ON DETAILS:

   2.1. EXPANSION ANCHORS
   - 2.1.1. SIMPSON STRONG-BOLT 2 INTO CONCRETE (ICC-ESR 3037) & MASONRY (IAPMO ER 240)
   - 2.1.2. HILTI KB-TZ2 INTO CONCRETE (ICC-ESR 4266) & MASONRY (ICC-ESR 4561)
   - 2.1.2. DEWALT POWER-STUD+SD6 & +SD4 (ICC-ESR 2502)

   2.2. EPOXY ANCHORS
   - 2.2.1. SIMPSON SET 3G EPOXY INTO CONCRETE (4057) & MASONRY (ESR 4844)
   - 2.2.2. SIMPSON ET-3G INTO CONCRETE (ICC-ESR 5334) & MASONRY (ICC-ESR 5309)
   - 2.2.2. HILTI RE 500 V3 INTO CONCRETE (ICC-ESR 3184)
   - 2.2.1. HILTI HY 270 INTO CONCRETE (ICC-ESR 4143) & MASONRY (ICC-ESR 4143)
   - 2.2.2. HILTI HY 200 INTO CONCRETE (ICC-ESR 4868) & MASONRY (ICC-ESR 4878)
   - 2.2.3. HILTI HY 100 INTO CONCRETE (ICC-ESR 3574) & MASONRY (IAPMO ER 547)

   2.3. SCREW ANCHORS
   - 2.3.2. TITEN HD INTO CONCRETE (ICC-ESR 2713) & MASONRY (ICC-ESR 1056)
   - 2.3.3. HILTI KH-EZ INTO CONCRETE (ICC-ESR 3056) & MASONRY (ICC-ESR 3056)
   - 2.1.3. HILTI KWIK-X DUAL ACTION (ICC-ESR 5065)

   2.2. POWDER-ACTUATED FASTENERS
   - 2.2.1. SIMPSON PDPAWL (ICC ESR 2138)
   - 2.2.1. HILTI X-CP 72 (ICC-ESR 2379)
   - 2.2.2. HILTI X-U (ICC-ESR 2269)

3. WELDED SHEAR STUDS: NELSON 3SL FLUX FILLED, HEADED STUD ANCHORS, 60,000 PSI MINIMUM ULTIMATE TENSILE STRENGTH, AUTOMATICALLY END WELDED IN FIELD CONFIRMING TO ASTM A108 AND COMPLYING WITH **ICC ES REPORT NO. 2856.**

4. WELDED DEFORMED ANCHORS: NELSON D2L, COLD ROLLED, DEFORMED STEEL REINFORCING BARS CONFORMING TO ASTM A496 AND COMPLYING WITH **ICC ES REPORT NO. 2907.**

5. FASTENERS:

   5.1. POWDER ACTUATED FASTENERS: SHALL PROVIDE APPROPRIATE WASHER BETWEEN FASTENER HEAD AND LIGHT GAUGE METAL OR WOOD SURFACE.
   - 5.1.1. POWER-DRIVEN FASTENERS SHALL NOT BE USED TO ANCHOR SILL PLATES EXCEPT AT INTERIOR NON-BEARING WALL NOT DESIGN AS SHEAR WALLS.

   5.2. SELF-DRILLING METAL SCREWS (INDICATED "SCREWS" ON DRAWINGS): MINIMUM 0.292-INCH HEAD DIAMETER SELF-DRILLING/SELF-TAPPING STEEL SCREWS COMPLYING WITH ICC ES REPORT. MINIMUM YIELD STRESS, FY=33 KSI.

   5.3. FASTENERS, INCLUDING NUTS AND WASHERS, IN CONTACT WITH PRESERVATIVE-TREATED WOOD SHALL BE HOT DIPPED ZINC-COATED GALVANIZED STEEL, STAINLESS STEEL, SILICON BRONZE OR COPPER. STAPLES SHALL BE OF STAINLESS STEEL. FASTENERS OTHER THAN NAILS, STABLES, TIMBER RIVETS, WOOD SCREWS AND LAG SCREWS SHALL BE PERMITTED TO BE OF MECHANICALLY DEPOSITED ZINC-COATED STEEL WITH COATING WEIGHTS IN ACCORDANCE WITH ASTM B695, CLASS 55 MINIMUM.
   - 5.3.1. EXCEPTION: PLAIN CARBON STEEL FASTENERS, INCLUDING NUTS AND WASHERS, IN SBX/DOT AND ZINC BORATED PRESERVATIVE WOOD IN AN INTERIOR, DRY ENVIRONMENT SHALL BE PERMITTED.

6. INSTALLATION: SEE MANUFACTURER'S WRITTEN INSTRUCTIONS AND REFERENCED ICC ES REPORT.

7. TESTING FOR DRILL AND EPOXY ANCHORS:
   - 7.1. SPECIAL INSPECTION: SPECIAL INSPECTOR WILL PERFORM CONTINUOUS SPECIAL INSPECTION DURING INSTALLATION.

8. MATERIALS NOT TO BE PENETRATED BY FASTENERS OR ANCHORAGES: POST-TENSIONED CONCRETE AND PRECAST, PRESTRESSED CONCRETE UNLESS SPECIFICALLY DETAILED HEREIN OR AS ACCEPTED IN WRITING BY ARCHITECT (STRUCTURAL ENGINEER). WHEN INSTALLATION IS PERMITTED, LOCATE PRESTRESSING AND POST-TENSIONED TENDONS ACCURATELY PRIOR TO INSTALLATION.

9. DRILLING HOLES IN EXISTING CONCRETE OR MASONRY FOR ANCHORAGES: USE NON-PNEUMATIC, ROTARY HAMMER TOOLS WITH ANSI COMPLIANT NON-REBAR CUTTING DRILL BITS TO DRILL HOLES OF PROPER TOLERANCES. LOCATE EXISTING REBAR INCLUDING PRESTRESSING AND POST-TENSIONING TENDONS USING NON-HAZARDOUS, NONDESTRUCTIVE METHODS WITH ACCURATE LOCATION TOLERANCES (PLUS OR MINUS 2" INCH PRIOR TO DRILLING HOLES TO AVOID CUTTING OR DAMAGING. HOLES SHALL BE THOROUGHLY CLEANED PER MANUFACTURERS WRITTEN RECOMMENDATIONS PRIOR TO INSTALLATION OF ANCHORAGES.

10. DELETERIOUS MATERIALS: KEEP ANCHORAGES, INCLUDING HOLES FOR DRILL AND EPOXY ANCHORS AND MECHANICAL ANCHORS, FREE OF DUST, GREASE, AND OTHER MATERIALS THAT IMPAIR BOND.

11. EXTERIOR PROPRIETARY ANCHORS & FASTENERS:
   - 11.1. FOR EXTERIOR APPLICATIONS & CORROSIVE ENVIRONMENTS, ALL ANCHORS SHOULD BE GALVANIZED OR STAINLESS STEEL. CONTRACTOR TO VERIFY AND PROVIDE GALVANIZED OR STAINLESS STEEL ANCHORAGE PER MANUFACTURER REQUIREMENTS. CONTRACTOR TO IMMEDIATELY NOTIFY THE STRUCTURAL EOR OF ANY DISCREPANCIES, PRIOR TO THE START OF CONSTRUCTION

12. EXTERIOR ANCHOR BOLTS AND POST BASES SHALL BE GALVANIZED AND SHALL HAVE AT LEAST TWO GALVANIZED NUTS ABOVE THE BASE PLATE.

STK
ALL SHEET METAL, INC.
42095 ZEVO DR., TEMECULA, CALIFORNIA 92590-3780
Phone: 951.296.9110 Fax: 951.296.6079 Email: stk@stkinc.com

CONSULTANT:

REVIEWED FOR CODE COMPLIANCE

THESE PLANS AND SPECIFICATIONS HAVE BEEN REVIEWED AND FOUND TO BE IN COMPLIANCE WITH THE CODES ADOPTED BY THE JURISDICTION. CONSTRUCTION IS SUBJECT TO FIELD INSPECTION AND APPROVAL BY CITY OF PERRIS BUILDING & SAFETY DEPARTMENT. APPROVAL OF ARCHITECTURAL, STRUCTURAL, MECHANICAL, ELECTRICAL, AND PLUMBING WORK RELIEVE THE OWNER, ARCHITECT, ENGINEER, AND CONTRACTOR OF RESPONSIBILITY FOR COMPLIANCE WITH ALL APPLICABLE CODES AND THE CONTRACT DOCUMENTS FOR ALL DESIGN AND CONSTRUCTION DEFICIENCIES NOT DISCLOSED IN VIOLATION OF ANY FEDERAL, STATE OR LOCAL LAWS.

BUILDING NUMBER: 105 & 2495
REVIEWED BY: STEVEN D. MORRIS

APPROVED FOR CONSTRUCTION
WITH CORRECTIONS NOTED
SEE CORRECTION LETTER FOR ITEMS TO BE ADDRESSED
BUILDING & SAFETY DEPARTMENT

ISE
STRUCTURAL ENGINEERS
27369 VIA INDUSTRIA
TEMECULA, CA 92590
TELE: 951.600.0032
WWW.ISEENGINEERS.COM
SOCAL | NORCAL | COLORADO

ISE PROJECT NO.: 24-8400.67

PROJECT MANAGER:
SANDY FONG EXT. 1016
SANDY@ISEENGINEERS.COM

PROJECT ADMINISTERED BY:

CITY OF PERRIS

101 NORTH "D" STREET
PERRIS, CA 92570

PROJECT NAME:

FIRE STATION 105
AND ADMINISTRATION
BUILDING

PROJECT CIP: F077

2495 MURRIETA ROAD
PERRIS, C

GEOTECHNICAL INFORMATION

1. REFER TO STRUCTURAL COVER SHEET (**SCS**) FOR ASSUMED SOIL VALUES OR VALUES BASED ON THE PROVIDED GEOTECHNICAL (SOILS) REPORT:
2. PRIOR TO REQUESTING A BUILDING DEPARTMENT FOUNDATION INSPECTION, THE SOILS ENGINEER SHALL CERTIFY IN WRITING THAT:
   a. THE BUILDING PAD WAS PREPARED IN ACCORDANCE WITH THE RECOMMENDATIONS IN THE SOILS REPORT,
   b. THE FOOTINGS EXTEND TO THE PROPER DEPTH OR BEARING STRATA,
   c. UTILITY TRENCHES ARE PROPERLY BACKFILLED AND COMPACTED,
   d. AND THAT THE CONDITIONS FOUND MATCH THOSE ASSUMED IN THE SOILS REPORT.
3. THE OWNER/DEVELOPER AND SUBCONTRACTORS ARE TO REVIEW THE SOILS REPORT PRIOR TO COMMENCING CONSTRUCTION AND VERIFY THE PLANS COMPLY WITH THE CURRENT SOILS REPORT RECOMMENDATIONS. THE STRUCTURAL ENGINEER SHALL BE NOTIFIED IF THE SOILS REPORT DATE SHOWN ON SHEET (**SCS**) DOES NOT MATCH THE CURRENT REPORT DATE. THE OWNER/DEVELOPER IS RESPONSIBLE FOR UPDATING THE STRUCTURAL ENGINEER WITH CURRENT GEOTECHNICAL ENGINEERING REQUIREMENTS.

FOUNDATION NOTES

1. INSTALL HOLDOWN ANCHOR BOLTS PER **13/SD1**. PROVIDE AND INSTALL ALL U.S.P. OR SIMPSON LUMBER CONNECTORS (OR EQUAL). FOUNDATION HARDWARE PER MANUFACTURERS RECOMMENDATIONS. DEEPEN FOOTING WHERE NECESSARY TO PROVIDE ANCHOR EMBEDMENT AT HOLDOWN LOCATIONS.
2. REFER TO SHEARWALL SCHEDULE **8/SD1** FOR ANCHOR BOLT SPACING AND FOR ANCHOR BOLT INSTALLATION.
3. REFER TO DETAIL PACKAGE FOR TYPICAL CONDITIONS NOT SPECIFICALLY CALLED OUT OR NOTED ON PLANS.
4. ALL DIMENSIONS SHALL BE PER THE CURRENT APPROVED STAMPED SET OF ARCHITECTURAL PLANS. OUR OFFICE SHOULD BE NOTIFIED IMMEDIATELY IF DISCREPANCIES EXIST BETWEEN THE ARCHITECTURAL & STRUCTURAL PLANS.
5. CONSTRUCT CONTINUOUS FOOTINGS AT CORNERS AND INTERSECTIONS PER DETAIL **10/SD1**.
6. FOUNDATION SIZES, DEPTHS, AND REINFORCEMENT SHOULD BE COORDINATED WITH THE OWNER/DEVELOPER'S SOILS ENGINEERS REPORT. SOILS ENGINEER REPORT MAY REQUIRE ADDITIONAL ITEMS NOT NOTED ON THE STRUCTURAL PLANS.
7. CLIENT/OWNER SHALL ADDRESS CORROSIVE SOIL CONDITIONS. FOR HIGH SULFATE SOIL CONDITIONS, MITIGATE PER ACI TABLE 4.3.1. THE CLIENT/OWNER SHALL HAVE A CORROSION ENGINEER PROVIDE MITIGATION RECOMMENDATIONS FOR ALL OTHER CORROSIVE SOIL CONDITIONS. CLIENT IS RESPONSIBLE TO REVIEW STRUCTURAL PLANS AND DETAILS FOR COMPLIANCE TO CORROSION ENGINEER'S RECOMMENDATIONS PRIOR TO CONSTRUCTION.

FOUNDATION LEGEND & SYMBOLS

- CONCRETE SLAB & FOOTING. FOOTING SIZE AND REINFORCING PER DETAIL SHEET **SD1**
- CONCRETE CURB PER ARCH. FOOTING SIZE AND REINFORCING PER DETAIL SHEET **SD1**
- ANCHOR /SPACING; AT XX' O.C.; XX; DETAIL #; SHEET #
  INDICATES: DETAIL CUT LOCATION. REFER TO DETAIL # AND STRUCTURAL SHEET NUMBER FOR MORE INFORMATION. TEXT ABOVE BUBBLE INDICATES REVISED HARDWARE OTHER THAN NOTED IN DETAIL
- END POST W/ HOLDOWN; TYPE; X; L=X; –WX; LENGTH; WALL CALC ID
  INDICATES: WOOD SHEAR WALL LOCATION. REFER TO DETAIL **8/SD1** FOR ANCHOR BOLT SIZE & SPACING AT EACH SHEAR WALL TYPE. PROVIDE 3" SQ x 0.229" ANGLE SLOTTED PLATE WASHERS AT EACH ANCHOR BOLT. REDUCE BOLT SPACING BY HALF AT DOUBLE SIDED SHEAR WALLS.
- F## — INDICATES PAD FOOTING PER DETAIL **6/SD1** w/ REINFORCEMENT PER SPREAD FOOTING SCHEDULE (DETAIL **18/SD1** FOR ISOLATED PAD FOOTING).
- CF## — INDICATES CONTINUOUS FOOTING PER DETAIL SHEET **SD1**. FOOTING SIZE AND REINFORCING PER PER CONTINUOUS FOOTING SCHEDULE

SPREAD FOOTING SCHEDULE

FOOTING MARK	CONCRETE FOOTING SIZE		STEEL REINFORCING
	WIDTH X LENGTH	EMBEDMENT	
F36	36" x 36"	18"	(4)-#5 BARS EACH WAY AT TOP & BTM
F42	42" x 42"	18"	(5)-#5 BARS EACH WAY AT TOP & BTM
F84	84" x 84"	18"	(7)-#6 BARS EACH WAY AT TOP & BTM

CONTINUOUS FOOTING SCHEDULE

FOOTING MARK	CONCRETE FOOTING SIZE		STEEL REINFORCING	
	WIDTH X DEPTH	EMBEDMENT	CONTINUOUS LONGITUDINAL BARS	TRANSVERSE BARS
CF20	20" x 12"	12"	(2) #5 T&B	#4 AT 18" O.C.

STRUCTURAL OBSERVATION REQUIREMENTS

STRUCTURAL OBSERVATION IS REQUIRED BY THE ENGINEER OF RECORD. OUR OFFICE SHOULD BE NOTIFIED TO PERFORM STRUCTURAL OBSERVATION AT THE FOLLOWING STAGES OF CONSTRUCTION:

1. PRIOR TO POUR OF CONCRETE TO OBSERVE REINFORCING & EMBEDS
2. WOOD FRAMING OBSERVATION PRIOR TO COVERING w/ FINISH & AFTER ROOF LOAD

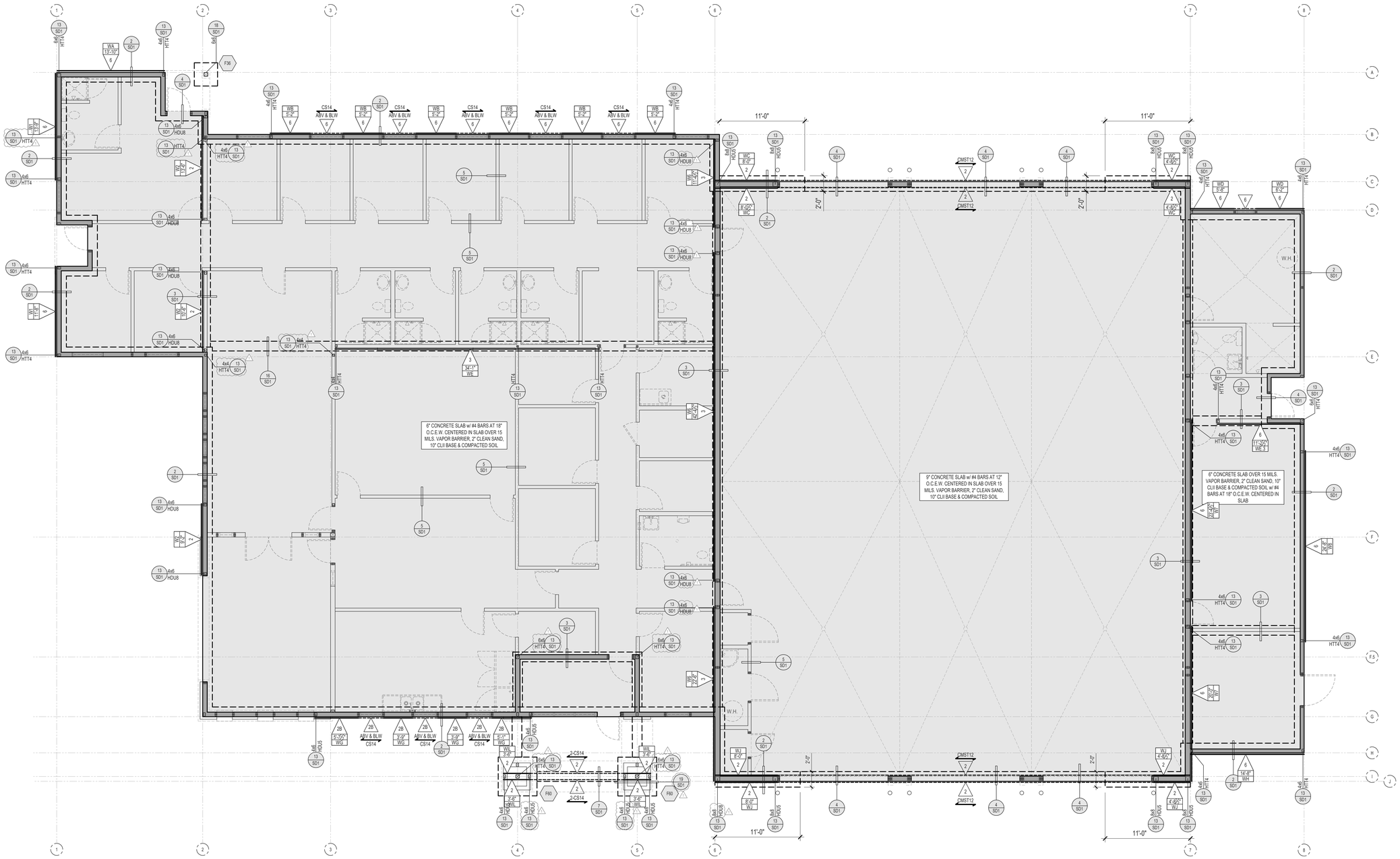

FIRE STATION FOUNDATION PLAN

SCALE : 3/16" = 1'-0"

DO NOT SCALE PLANS FOR CONSTRUCTION DIMENSIONS. ALL CONSTRUCTION DIMENSIONS SHOULD BE VERIFIED WITH THE ARCHITECTURAL SET OF PLANS

02/05/2026 4:13PM W:\8400 - STK\8400.87 - Perris Fire Station\02 - Drawings\Plans - Fire Station.dwg

STK
SCI | SPORTS | STRATEGY, INC.
42095 ZEVO DR., TEMECULA, CALIFORNIA 92590-3780
Phone: 951.296.9110 Fax: 951.296.6079 Email: stk@stkinc.com

CONSULTANT:

REVIEWED FOR CODE COMPLIANCE
ISE
THESE PLANS AND SPECIFICATIONS ARE TO BE REVIEWED AND FOUND TO BE IN COMPLIANCE WITH THE CODES ADOPTED BY THE JURISDICTION HAVING AUTHORITY BEFORE THEY ARE SUBJECT TO APPROVAL BY OTHER AGENCIES. THE REVIEW AND APPROVAL OF THESE PLANS AND SPECIFICATIONS DOES NOT INCLUDE APPROVAL OF ASSUMED OR UNDETERMINED QUANTITIES AND DOES NOT RELIEVE THE OWNER, CONTRACTOR, OR THE CONTRACTOR'S AGENTS, EMPLOYEES OR SUBCONTRACTORS OF RESPONSIBILITY FOR CONSTRUCTING THE PROJECT IN ACCORDANCE WITH THE APPROVED CONSTRUCTION DOCUMENTS NOR FOR CORRECTING ERRORS, OMISSIONS OR VIOLATIONS OF ANY FEDERAL, STATE OR LOCAL LAWS, CODES OR REGULATIONS.
BUILDING BUREAU SOLUTIONS, INC.
REVIEWED BY: STEVEN D. MORRIS
DATE: 12/15/2025
THESE PLANS HAVE BEEN REVIEWED FOR COMPLIANCE WITH THE 2025 CALIFORNIA BUILDING CODE AND ADOPTED LOCAL AMENDMENTS. ADDITIONAL COMMENTS MAY BE REQUIRED BY OTHER DEPARTMENTS.
STRUCTURAL ENGINEERS
27369 VIA INDUSTRIA
TEMECULA, CA 92590
TELE 951.600.0032
WWW.ISEENGINEERS.COM
SOCAL | NORCAL | COLORADO
ISE PROJECT NO.: 24-8400.67

PROJECT MANAGER:
SANDY FONG EXT. 1016
SANDY@ISEENGINEERS.COM

PROJECT ADMINISTERED BY:
CITY OF PERRIS

101 NORTH "D" STREET
PERRIS, CA 92570

PROJECT NAME:
FIRE STATION 105 AND ADMINISTRATION BUILDING

PROJECT CIP: F077

2495 MURRIETA ROAD
PERRIS, CA 92585

ISSUE INFORMATION:

DATE:	INFORMATION:
11-26-25	95% CD SUBMITTAL
02-05-26	1 BLDG. & SAFETY 1st PLAN CHECK

SHEET INFORMATION:

STK PROJECT NO.:	365-03-25
SCALE:	AS NOTED
DATE:	FEBRUARY 2026
PLOT DATE:	–
DRAWN BY:	SF

SEAL:
REGISTERED PROFESSIONAL ENGINEER SANDY FONG C86965 CIVIL STATE OF CALIFORNIA

SHEET TITLE:
FIRE STATION FOUNDATION PLAN

SHEET NO.:
S1

FRAMING LEGEND & SYMBOLS

AT XX" O.C. — REQ. HDWR SPACING
X — DETAIL #
XX — SHEET #

INDICATES DETAIL CUT LOCATION. REFER TO DETAIL # AND STRUCTURAL SHEET NUMBER FOR MORE INFORMATION. TEXT ABOVE BUBBLE INDICATES REVISED HARDWARE OTHER THAN NOTED IN DETAIL

INDICATES 2x4 STUD WALL PER PLAN & DETAIL 5/SD2. COORDINATE STUD WALL SIZE WITH ARCH. PLANS.

INDICATES 2x6 STUD WALL PER PLAN & DETAIL 5/SD2. COORDINATE STUD WALL SIZE WITH ARCH. PLANS.

XX

INDICATES:
1. WALL OPENING HEADER PER FRAMING SCHEDULE BELOW
2. PROVIDE (1) 2x TRIMMER EACH SIDE U.N.O. ON PLAN
3. PROVIDE KING STUDS EACH SIDE PER DETAIL 5/SD2 U.N.O. ON PLAN.

XX
HU BM TO BM HGR TYP., U.N.O, PER PLAN AS OCCURS.
USE CONCEALED FLANGE HGR AS NEEDED

INDICATES:
1. BEAM AS NOTED ON PLANS
2. PROVIDE BEARING STUDS OR POST EACH END TO MATCH WIDTH OF BEAM AND SUPPORT WALL , U.N.O.
3. (1) 2x WALL STUD ALIGNED AT 1 ½" WIDE LSL BEAMS IS ACCEPTABLE
4. BEAM SHOULD BE INSTALLED WITH BOTTOM ON TOP PLATE U.N.O.

*S
GT-X.X
AT-X.X
JOIST DEPTH (IN.)
JOIST SPAC. (IN. O.C.)
XX-XX-XX
JOIST TYPE (SEE SHT. SN1)

INDICATES:
1. WOOD MANUFACTURED PLATED ROOF TRUSS BY OTHERS AT 24" O.C.
2. ARROWHEADS INDICATE EXTENT OF SPAN AND BEARING LOCATIONS
3. *S = SCISSOR TRUSS W/ SLOPED BOTTOM CHORD PER ARCHITECT AS OCCURS

INDICATES:
1. GIRDER TRUSS W/ LATERAL LOAD 180 PLF (0.7E), U.N.O.
2. PROVIDE BEARING STUDS OR POST EACH END TO MATCH WIDTH OF GIRDER AND SUPPORT WALL, U.N.O.
3. TRUSS TO TRUSS HANGERS SHALL BE SPECIFIED BY TRUSS DESIGNER
4. PROVIDE ROOF DIAPHRAGM EDGE NAILING TO GIRDER

INDICATES ALIGNED TRUSS W/ LATERAL LOAD 180 PLF (0.7E SEISMIC), U.N.O. & PROVIDE ROOF DIAPHRAGM EDGE NAILING

INDICATES FLOOR I-JOIST SPAN, DIRECTION, DEPTH, SPACING AND TYPE OF FLOOR I-JOISTS PER TABLE AT RIGHT. REFER TO "FLOOR JOIST SPECIFICATIONS" ON SHEET SN1 FOR MANUF ALT

I-JOIST SPECIFICATIONS			
TYPE	MANF	TYPE	SIZE - DEPTH (IN)
A	TJI	110	14
B	TJI	210	14
C	TJI	230	14
D	TJI	360	14
E	TJI	560	14

END POST W/ HOLDOWN
TYPE
LENGTH
WALL CALC ID
L=X
WX

INDICATES SHEAR TYPE ABV & BLW OPENING
END POST W/ HOLDOWN
TYPE
LENGTH
WALL CALC ID
XXXX
L=X Wx
INDICATES HORIZ. STRAP ABV & BLW OPENING

IDENTIFIES CALIFORNIA FILL ROOF FRAMING OVER STRUCTURAL ROOF PER DETAIL 11/SD4

INDICATES:
1. WOOD SHEAR WALL PANEL LOCATION PER PLAN INSTALLED FULL HEIGHT OF WALL
2. REFER TO DETAIL 1/SD2 SHEAR WALL SCHEDULE FOR ADDITIONAL REQUIREMENTS
3. PROVIDE POST AND STRAP/HOLDOWN EACH END OF WALL MIN AS INDICATED PER PLAN
4. AT UPPER FLOORS WHERE WALL SHEATHING DOES NOT EXTEND AND EDGE NAIL TO FLOOR RIM PROVIDE SILL PLATE NAILING OR SCREWS PER DETAIL 1/SD2

INDICATES:
1. WOOD SHEAR WALL PANEL LOCATION PER PLAN INSTALLED FULL HEIGHT OF WALL AND SHEAR PANEL ABOVE AND BELOW OPENING
2. REFER TO DETAIL 1/SD2 SHEAR WALL SCHEDULE FOR ADDITIONAL REQUIREMENTS
3. PROVIDE POST AND STRAP/HOLDOWN EACH END OF WALL MIN AS INDICATED PER PLAN
4. AT UPPER FLOORS WHERE WALL SHEATHING DOES NOT EXTEND AND EDGE NAIL TO FLOOR RIM PROVIDE SILL PLATE NAILING OR SCREWS PER DETAIL 1/SD2
5. REFER TO DETAIL 5B/SD2 FOR PERFORATED SHEAR WALL CONDITION (SHEAR ABV AND BLW OPENING W/O STRAP)
6. REFER TO DETAIL 5C/SD2 FOR FORCE TRANSFER SHEAR WALL CONDITION (SHEAR ABV AND BLW OPENING W/ STRAP)

FRAMING NOTES

1. REFER TO STRUCTURAL GENERAL NOTE SHEET (SN SERIES) AND DETAILS (SD SERIES) FOR INFORMATION NOT SHOWN ON THE MAIN FRAMING PLANS.
2. REFER TO MAIN FRAMING PLAN FOR ALL INFORMATION NOT SHOWN ON THE ALTERNATE ELEVATIONS AND OPTIONS.
3. PROVIDE SQUASH BLOCKING AT THE FLOOR LEVELS ALIGNED BELOW ALL POSTS GREATER THAN 4x4 TO MATCH THE DIMENSIONS OF THE POSTS ABOVE TYPICAL AT DROP BEAMS AND STUD WALLS.
4. FRAMER & TRUSS MANUFACTURER TO COORDINATE JOIST AND TRUSS SPACING WITH M.E.P. DESIGNS. FRAMER TO REVIEW MECH. AND ELECTRIC PLANS BEFORE FINAL PLACEMENT OF JOISTS AND/OR TRUSSES. WHERE ALIGNED JOIST AND/OR TRUSS INTERFERES w/ FUTURE INSTALLATION OF M.E.P. INSTALLATION, CONTACT STRUCTURAL ENGINEER.
5. SPLICE ALL EXTERIOR WALL AND INTERIOR SHEAR WALL TOP PLATE BREAKS PER DETAIL 4/SD2, TYP.
6. ROOF SHOULD BE FULLY LOADED PRIOR TO NAILING THE TOP PLATE HARDWARE TO ROOF TRUSS BOTTOM CHORD.

TENSION STRAP
L=X'-XX"

INDICATES: DRAG TIE STRAP TO ROOF/FLOOR BLK'G LENGTH SHOWN INDICATES STRAP LENGTH OFF WALL

INDICATES: DRAG TIE STRAP PER PLAN OR DETAIL SHOWN ON PLANS.

IDENTIFIES BLOCKED HORIZONTAL DIAPHRAGM w/ 2x4 FLAT BLOCKING AT PANEL EDGES, BOUNDARY & EDGE NAILING PER PLAN & DETAILS 2&3/SD2

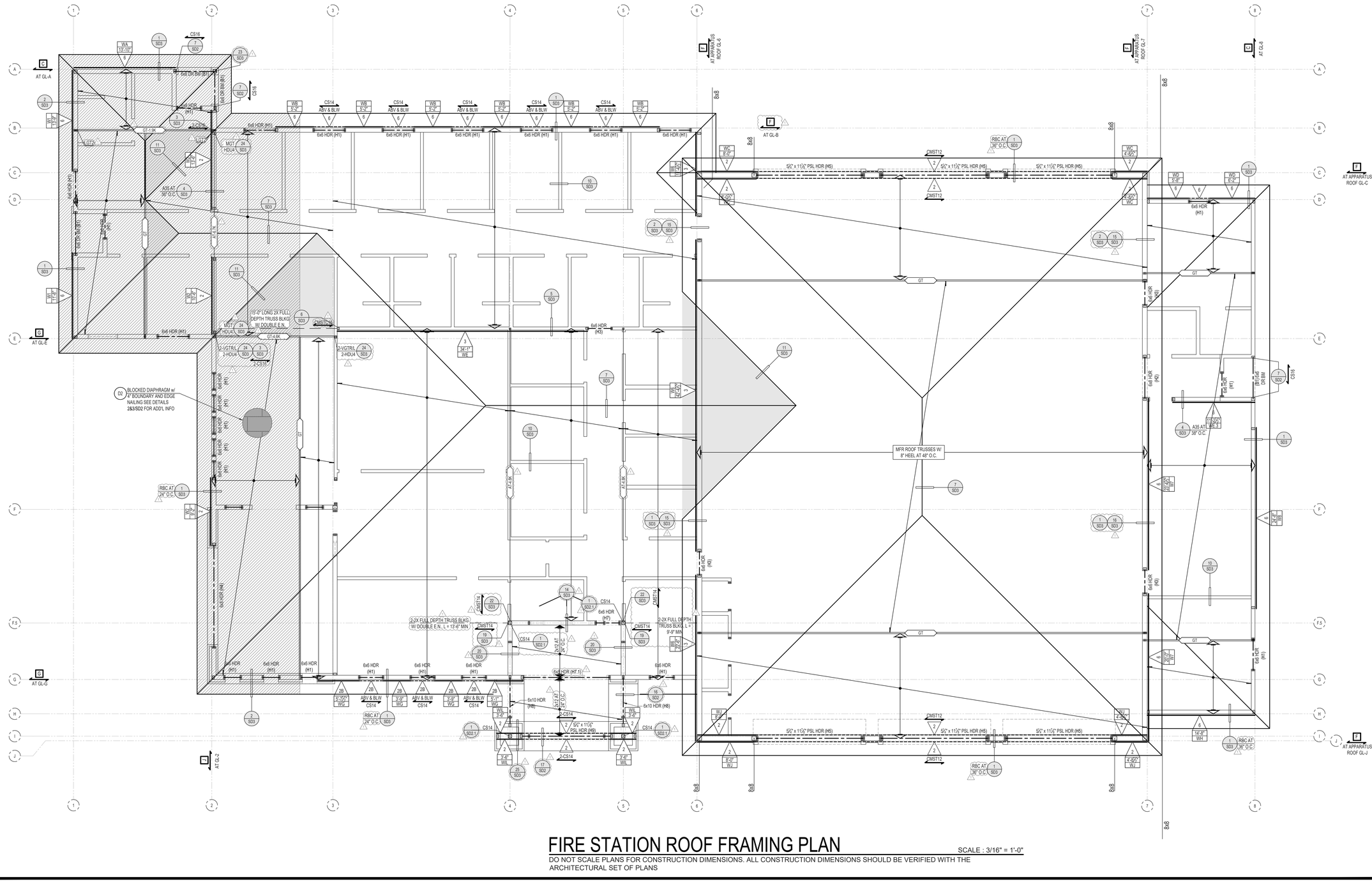

FIRE STATION ROOF FRAMING PLAN

SCALE : 3/16" = 1'-0"

DO NOT SCALE PLANS FOR CONSTRUCTION DIMENSIONS. ALL CONSTRUCTION DIMENSIONS SHOULD BE VERIFIED WITH THE ARCHITECTURAL SET OF PLANS

W:\8400 - STK\8400.87 - Perris Fire Station\02 - Drawings\Plans - Fire Station.dwg
02/03/2026 4:13PM

STK
42095 ZEVO DR., TEMECULA, CALIFORNIA 92590-3780
Phone: 951.296.9110 Fax: 951.296.6079 Email: stk@stkinc.com

CONSULTANT:

REVIEWED FOR CODE COMPLIANCE
ISE
STRUCTURAL ENGINEERS
27369 VIA INDUSTRIA
TEMECULA, CA 92590
TELE 951.600.0032
WWW.ISEENGINEERS.COM
SOCAL | NORCAL | COLORADO
ISE PROJECT NO.: 24-8400.67

PROJECT MANAGER:
SANDY FONG EXT. 1016
SANDY@ISEENGINEERS.COM

PROJECT ADMINISTERED BY:
CITY OF PERRIS

101 NORTH "D" STREET
PERRIS, CA 92570

PROJECT NAME:
FIRE STATION 105 AND ADMINISTRATION BUILDING

PROJECT CIP: F077

2495 MURRIETA ROAD
PERRIS, CA 92585

ISSUE INFORMATION:

DATE:	INFORMATION:
11-26-25	95% CD SUBMITTAL
02-05-26	1 BLDG. & SAFETY 1st PLAN CHECK

SHEET INFORMATION:

STK PROJECT NO.:	365-03-25
SCALE:	AS NOTED
DATE:	FEBRUARY 2026
PLOT DATE:	–
DRAWN BY:	SF

SEAL:
REGISTERED PROFESSIONAL ENGINEER SANDY FONG C85965 CIVIL STATE OF CALIFORNIA

SHEET TITLE:
FIRE STATION ROOF FRAMING PLAN

SHEET NO.:
S2

FRAMING LEGEND & SYMBOLS

AT XX" O.C. — REQ. HDWR SPACING X — DETAIL # XX — SHEET #	INDICATES DETAIL CUT LOCATION. REFER TO DETAIL # AND STRUCTURAL SHEET NUMBER FOR MORE INFORMATION. TEXT ABOVE BUBBLE INDICATES REVISED HARDWARE OTHER THAN NOTED IN DETAIL
	INDICATES 2x4 STUD WALL PER PLAN & DETAIL 5/SD2. COORDINATE STUD WALL SIZE WITH ARCH. PLANS.
	INDICATES 2x6 STUD WALL PER PLAN & DETAIL 5/SD2. COORDINATE STUD WALL SIZE WITH ARCH. PLANS.
XX	INDICATES: 1. WALL OPENING HEADER PER FRAMING SCHEDULE BELOW 2. PROVIDE (1) 2x TRIMMER EACH SIDE U.N.O. ON PLAN 3. PROVIDE KING STUDS EACH SIDE PER DETAIL 5/SD2 U.N.O. ON PLAN.
XX HU BM TO BM HGR TYP., U.N.O. PER PLAN AS OCCURS. USE CONCEALED FLANGE HGR AS NEEDED	INDICATES: 1. BEAM AS NOTED ON PLANS 2. PROVIDE BEARING STUDS OR POST EACH END TO MATCH WIDTH OF BEAM AND SUPPORT WALL , U.N.O. 3. (1) 2x WALL STUD ALIGNED AT 1 ½" WIDE LSL BEAMS IS ACCEPTABLE 4. BEAM SHOULD BE INSTALLED WITH BOTTOM ON TOP PLATE U.N.O.

*S	INDICATES: 1. WOOD MANUFACTURED PLATED ROOF TRUSS BY OTHERS AT 24" O.C. 2. ARROWHEADS INDICATE EXTENT OF SPAN AND BEARING LOCATIONS 3. *S = SCISSOR TRUSS W/ SLOPED BOTTOM CHORD PER ARCHITECT AS OCCURS
GT-X.X	INDICATES: 1. GIRDER TRUSS W/ LATERAL LOAD 180 PLF (0.7E), U.N.O. 2. PROVIDE BEARING STUDS OR POST EACH END TO MATCH WIDTH OF GIRDER AND SUPPORT WALL, U.N.O. 3. TRUSS TO TRUSS HANGERS SHALL BE SPECIFIED BY TRUSS DESIGNER 4. PROVIDE ROOF DIAPHRAGM EDGE NAILING TO GIRDER
AT-X.X	INDICATES ALIGNED TRUSS W/ LATERAL LOAD 180 PLF (0.7E SEISMIC), U.N.O. & PROVIDE ROOF DIAPHRAGM EDGE NAILING
JOIST DEPTH (IN.) — JOIST SPAC. (IN. O.C.) — XX-XX-XX — JOIST TYPE (SEE SHT. SN1)	INDICATES FLOOR I-JOIST SPAN, DIRECTION, DEPTH, SPACING AND TYPE OF FLOOR I-JOISTS PER TABLE AT RIGHT. REFER TO "FLOOR JOIST SPECIFICATIONS" ON SHEET SN1 FOR MANUF ALT

I-JOIST SPECIFICATIONS

TYPE	MANF	TYPE	SIZE - DEPTH (IN)
A	TJI	110	14
B	TJI	210	14
C	TJI	230	14
D	TJI	360	14
E	TJI	560	14

END POST W/ HOLDOWN TYPE WALL CALC ID LENGTH 1-XX WX	IDENTIFIES CALIFORNIA FILL ROOF FRAMING OVER STRUCTURAL ROOF PER DETAIL 11/SD4
INDICATES SHEAR TYPE ABV & BLW OPENING END POST W/ HOLDOWN TYPE LENGTH WALL CALC ID 1-XX WX XXX INDICATES HORIZ. STRAP ABV & BLW OPENING	INDICATES: 1. WOOD SHEAR WALL PANEL LOCATION PER PLAN INSTALLED FULL HEIGHT OF WALL 2. REFER TO DETAIL 1/SD2 SHEAR WALL SCHEDULE FOR ADDITIONAL REQUIREMENTS 3. PROVIDE POST AND STRAP/HOLDOWN EACH END OF WALL MIN AS INDICATED PER PLAN 4. AT UPPER FLOORS WHERE WALL SHEATHING DOES NOT EXTEND AND EDGE NAIL TO FLOOR RIM PROVIDE SILL PLATE NAILING OR SCREWS PER DETAIL 1/SD2
	INDICATES: 1. WOOD SHEAR WALL PANEL LOCATION PER PLAN INSTALLED FULL HEIGHT OF WALL AND SHEAR PANEL ABOVE AND BELOW OPENING 2. REFER TO DETAIL 1/SD2 SHEAR WALL SCHEDULE FOR ADDITIONAL REQUIREMENTS 3. PROVIDE POST AND STRAP/HOLDOWN EACH END OF WALL MIN AS INDICATED PER PLAN 4. AT UPPER FLOORS WHERE WALL SHEATHING DOES NOT EXTEND AND EDGE NAIL TO FLOOR RIM PROVIDE SILL PLATE NAILING OR SCREWS PER DETAIL 1/SD2 5. REFER TO DETAIL 5B/SD2 FOR PERFORATED SHEAR WALL CONDITION (SHEAR ABV AND BLW OPENING W/O STRAP) 6. REFER TO DETAIL 5C/SD2 FOR FORCE TRANSFER SHEAR WALL CONDITION (SHEAR ABV AND BLW OPENING W/ STRAP)

FRAMING NOTES

1. REFER TO STRUCTURAL GENERAL NOTE SHEET (SN SERIES) AND DETAILS (SD SERIES) FOR INFORMATION NOT SHOWN ON THE MAIN FRAMING PLANS.
2. REFER TO MAIN FRAMING PLAN FOR ALL INFORMATION NOT SHOWN ON THE ALTERNATE ELEVATIONS AND OPTIONS.
3. PROVIDE SQUASH BLOCKING AT THE FLOOR LEVELS ALIGNED BELOW ALL POSTS GREATER THAN 4x4 TO MATCH THE DIMENSIONS OF THE POSTS ABOVE TYPICAL AT DROP BEAMS AND STUD WALLS.
4. FRAMER & TRUSS MANUFACTURER TO COORDINATE JOIST AND TRUSS SPACING WITH M.E.P. DESIGNS. FRAMER TO REVIEW MECH. AND ELECTRIC PLANS BEFORE FINAL PLACEMENT OF JOISTS AND/OR TRUSSES. WHERE ALIGNED JOIST AND/OR TRUSS INTERFERES w/ FUTURE INSTALLATION OF M.E.P. INSTALLATION, CONTACT STRUCTURAL ENGINEER.
5. SPLICE ALL EXTERIOR WALL AND INTERIOR SHEAR WALL TOP PLATE BREAKS PER DETAIL 4/SD2, TYP.
6. ROOF SHOULD BE FULLY LOADED PRIOR TO NAILING THE TOP PLATE HARDWARE TO ROOF TRUSS BOTTOM CHORD.

TENSION STRAP L=X'-XX"	INDICATES: DRAG TIE STRAP TO ROOF/FLOOR BLK'G LENGTH SHOWN INDICATES STRAP LENGTH OFF WALL INDICATES: DRAG TIE STRAP PER PLAN OR DETAIL SHOWN ON PLANS. IDENTIFIES BLOCKED HORIZONTAL DIAPHRAGM w/ 2x4 FLAT BLOCKING AT PANEL EDGES, BOUNDARY & EDGE NAILING PER PLAN & DETAILS 2&3/SD2

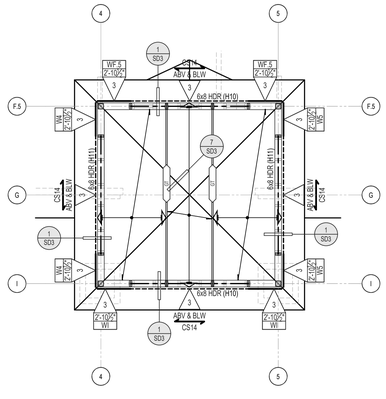

FIRE STATION CLERESTORY ROOF FRAMING PLAN

SCALE : 3/16" = 1'-0"

DO NOT SCALE PLANS FOR CONSTRUCTION DIMENSIONS. ALL CONSTRUCTION DIMENSIONS SHOULD BE VERIFIED WITH THE ARCHITECTURAL SET OF PLANS

STK
42095 ZEVO DR., TEMECULA, CALIFORNIA 92590-3780
Phone: 951.296.9110 Fax: 951.296.6079 Email: stk@stkinc.com

CONSULTANT:

ISE ENGINEERS
2369 VIA INDUSTRIA
TEMECULA, CA 92590
TELE: 951.600.0032
WWW.ISEENGINEERS.COM
SOCAL | NORCAL | COLORADO
ISE PROJECT NO.: 24-8400.67

PROJECT MANAGER:
SANDY FONG EXT. 1016
SANDY@ISEENGINEERS.COM

REVIEWED FOR CODE COMPLIANCE
THESE PLANS AND SPECIFICATIONS ARE NOT TO BE FOUND TO BE IN CONFORMANCE WITH THE CODES ADOPTED BY THE JURISDICTION HAVING AUTHORITY UNTIL SUBJECT TO APPROVAL BY OTHER AUTHORITIES HAVING JURISDICTION OVER THE PROJECT. THE APPROVAL OF ANY CONSTRUCTION DOCUMENTS BY THE BUILDING OFFICIAL OR AUTHORITY HAVING JURISDICTION SHALL NOT BE CONSTRUED AS AN APPROVAL OF ANY VIOLATION TO THE CODES OR OTHER APPLICABLE LAWS, ORDINANCES, NOR RELIEVE THE OWNER OR THE OWNER'S AGENT FROM THE RESPONSIBILITY OF THE CONTRACTOR OF COMPLYING WITH THE CODES OR OTHER APPLICABLE LAWS, ORDINANCES, RULES OR REGULATIONS. THE CONTRACTOR IS RESPONSIBLE FOR CONSTRUCTION PERFORMED FROM THESE DOCUMENTS BUT WHICH IS NOT IN COMPLIANCE WITH THE CODES OR OTHER APPLICABLE LAWS, ORDINANCES, RULES OR REGULATIONS. ANY CONSTRUCTION PERFORMED IN VIOLATION OF ANY FEDERAL, STATE OR LOCAL LAW SHALL BE DONE AT THE CONTRACTOR'S RISK.
BUILDING BUREAU VOLUNTEER, INC.
REVIEWED BY: STEVEN HOWARD
DATE: 02/05/2026
THE REVIEW OF THESE PLANS SHALL NOT RELIEVE ANY RESPONSIBILITY OF THE ARCHITECT OR ENGINEER OF RECORD FOR PERFORMANCE OF THE WORK IN ACCORDANCE WITH THE REQUIREMENTS OF THE BUILDING CODE AND OTHER LAWS AND REGULATIONS ENFORCED BY THE BUILDING DEPARTMENT.

PROJECT ADMINISTERED BY:
CITY OF PERRIS

101 NORTH "D" STREET
PERRIS, CA 92570

PROJECT NAME:
FIRE STATION 105 AND ADMINISTRATION BUILDING

PROJECT CIP: F077

2495 MURRIETA ROAD
PERRIS, CA 92585

ISSUE INFORMATION:

DATE:	INFORMATION:
11-26-25	95% CD SUBMITTAL
02-05-26	1 BLDG. & SAFETY 1st PLAN CHECK

SHEET INFORMATION:

STK PROJECT NO.:	365-03-25
SCALE:	AS NOTED
DATE:	FEBRUARY 2026
PLOT DATE:	–
DRAWN BY:	SF

SEAL:

REGISTERED PROFESSIONAL ENGINEER — SANDY FONG — C85965 — CIVIL — STATE OF CALIFORNIA

SHEET TITLE:
FIRE STATION CLERESTORY ROOF FRAMING PLAN

SHEET NO.:
S3

W:\8400 - STK\8400.67 - Perris Fire Station\02 - Drawings\Revit - Fire Station.dwg
02/03/2026 4:13PM

Tower Roof Vertical Wind Pressures (Unfactored)		
Zone	P_{max} (psf)	P_{min} (psf)
1	21.7	-49.1
2r	21.7	-63.7
2e, 3	21.7	-68.6
b = 3'-0"		

Fire Station Roof Vertical Wind Pressures (Unfactored)		
Zone	P_{max} (psf)	P_{min} (psf)
1	19.5	-33.5
2r	19.5	-57.3
2e, 3	19.5	-44.2
a = 8'-9"		

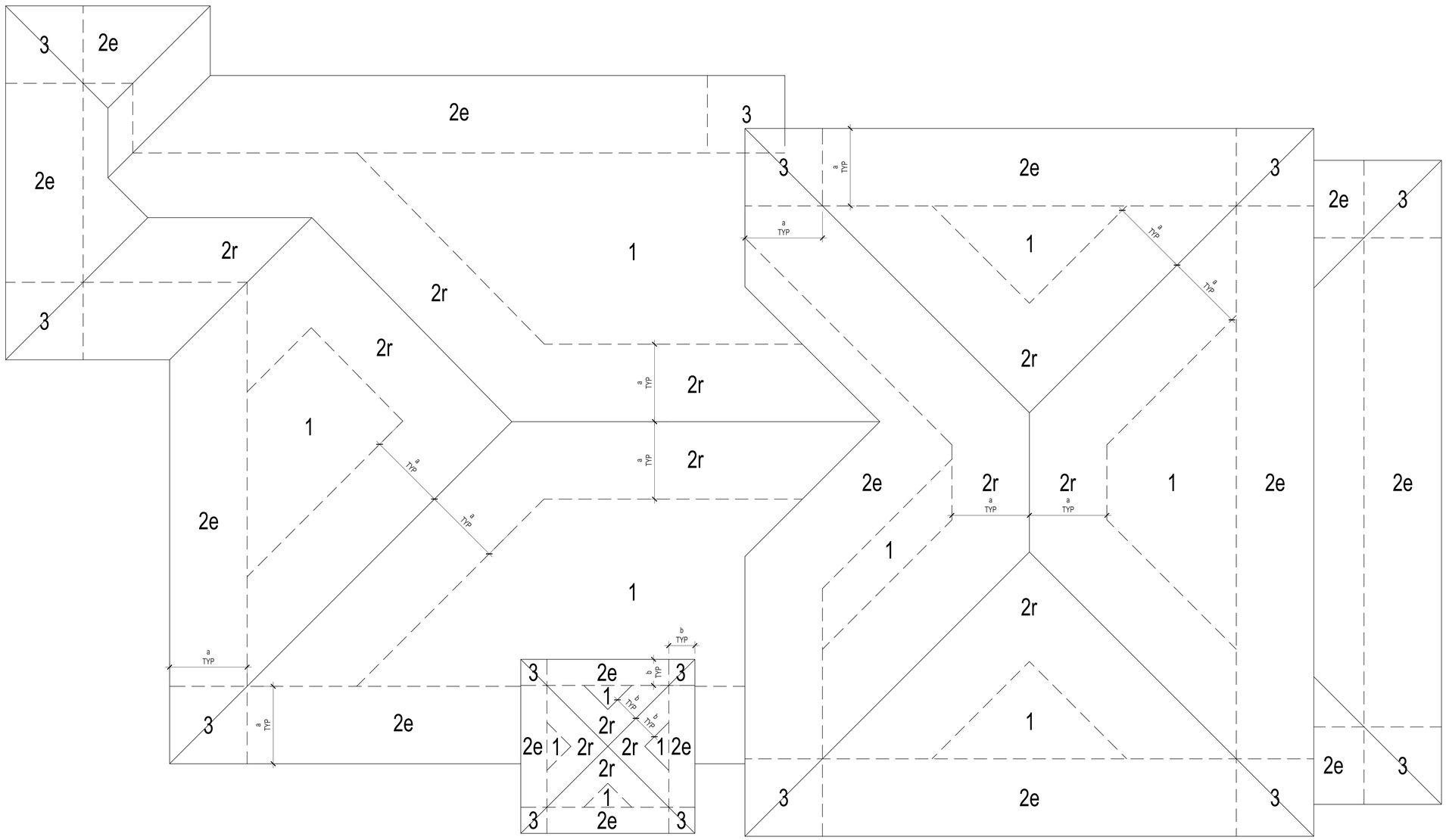

FIRE STATION ROOF WIND LOAD DIAGRAM

SCALE : 3/16" = 1'-0"

DO NOT SCALE PLANS FOR CONSTRUCTION DIMENSIONS. ALL CONSTRUCTION DIMENSIONS SHOULD BE VERIFIED WITH THE ARCHITECTURAL SET OF PLANS

STK
42095 ZEVO DR., TEMECULA, CALIFORNIA 92590-3780
Phone: 951.296.9110 Fax: 951.296.6079 Email: stk@stkinc.com

CONSULTANT:

ISE
STRUCTURAL ENGINEERS
2369 VIA INDUSTRIA
TEMECULA, CA 92590
TELE 951.600.0032
WWW.ISEENGINEERS.COM
SOCAL | NORCAL | COLORADO
ISE PROJECT NO.: 24-8400.67

PROJECT MANAGER:
SANDY FONG EXT. 1016
SANDY@ISEENGINEERS.COM

PROJECT ADMINISTERED BY:
CITY OF PERRIS

101 NORTH "D" STREET
PERRIS, CA 92570

PROJECT NAME:
FIRE STATION 105 AND ADMINISTRATION BUILDING

PROJECT CIP: F077

2495 MURRIETA ROAD
PERRIS, CA 92585

ISSUE INFORMATION:

DATE:	INFORMATION:
11-26-25	95% CD SUBMITTAL
02-05-26	1 BLDG. & SAFETY 1st PLAN CHECK

SHEET INFORMATION:

STK PROJECT NO.:	365-03-25
SCALE:	AS NOTED
DATE:	FEBRUARY 2026
PLOT DATE:	–
DRAWN BY:	SF

SEAL:

REGISTERED PROFESSIONAL ENGINEER SANDY FONG C83965 CIVIL STATE OF CALIFORNIA

SHEET TITLE:
FIRE STATION ROOF WIND LOAD DIAGRAM

SHEET NO.:
S3.1

REVIEWED FOR DESIGN COMPLIANCE
THESE PLANS AND SPECIFICATIONS HAVE BEEN FOUND TO BE IN SUBSTANTIAL COMPLIANCE WITH THE CODES IN EFFECT IN THIS JURISDICTION AT THE TIME OF PLAN SUBMITTAL. THIS APPROVAL IS SUBJECT TO ALL PROVISIONS OF LAW REQUIRING THE CORRECTION OF ERRORS DISCOVERED AFTER APPROVAL. THE APPROVAL OF PLANS AND SPECIFICATIONS SHALL NOT BE VALID UNLESS AWARDS, NOR RELIEVE THE OWNER OR HIS AUTHORIZED AGENT OR CONTRACTOR OF RESPONSIBILITY FOR COMPLIANCE WITH THE CODES OR OTHER LAWS. APPROVED DOCUMENTS NOT TO BE CHANGED, MODIFIED OR ALTERED WITHOUT BUILDING BUREAU'S APPROVAL AND ALL CHANGES, MODIFICATIONS OR ALTERATIONS SHALL BE IN CONFORMANCE WITH ALL REQUIREMENTS OF ANY FEDERAL, STATE OR LOCAL LAWS.
BUILDING BUREAU'S SIGNATURE
REVIEWED BY: STEVEN KNIGHT
DATE: 02/05/2026
THIS APPROVAL DOES NOT AUTHORIZE VIOLATION OF ANY FEDERAL, STATE OR LOCAL LAWS. WORK MUST BE INSPECTED AND APPROVED BY ALL DEPARTMENTS.

W:\8400 - STK\8400.67 - Perris Fire Station\02 - Drawings\Plans - Fire Station.dwg
02/03/2026 4:13PM

GEOTECHNICAL INFORMATION

1. REFER TO STRUCTURAL COVER SHEET (SCS) FOR ASSUMED SOIL VALUES OR VALUES BASED ON THE PROVIDED GEOTECHNICAL (SOILS) REPORT:
2. PRIOR TO REQUESTING A BUILDING DEPARTMENT FOUNDATION INSPECTION, THE SOILS ENGINEER SHALL CERTIFY IN WRITING THAT:
   a. THE BUILDING PAD WAS PREPARED IN ACCORDANCE WITH THE RECOMMENDATIONS IN THE SOILS REPORT,
   b. THE FOOTINGS EXTEND TO THE PROPER DEPTH OR BEARING STRATA,
   c. UTILITY TRENCHES ARE PROPERLY BACKFILLED AND COMPACTED,
   d. AND THAT THE CONDITIONS FOUND MATCH THOSE ASSUMED IN THE SOILS REPORT.
3. THE OWNER/DEVELOPER AND SUBCONTRACTORS ARE TO REVIEW THE SOILS REPORT PRIOR TO COMMENCING CONSTRUCTION AND VERIFY THE PLANS COMPLY WITH THE CURRENT SOILS REPORT RECOMMENDATIONS. THE STRUCTURAL ENGINEER SHALL BE NOTIFIED IF THE SOILS REPORT DATE SHOWN ON SHEET (SCS) DOES NOT MATCH THE CURRENT REPORT DATE. THE OWNER/DEVELOPER IS RESPONSIBLE FOR UPDATING THE STRUCTURAL ENGINEER WITH CURRENT GEOTECHNICAL ENGINEERING REQUIREMENTS.

FOUNDATION NOTES

1. INSTALL HOLDOWN ANCHOR BOLTS PER 13/SD1. PROVIDE AND INSTALL ALL U.S.P. OR SIMPSON LUMBER CONNECTORS (OR EQUAL). FOUNDATION HARDWARE PER MANUFACTURERS RECOMMENDATIONS. DEEPEN FOOTING WHERE NECESSARY TO PROVIDE ANCHOR EMBEDMENT AT HOLDOWN LOCATIONS.
2. REFER TO SHEARWALL SCHEDULE 8/SD1 FOR ANCHOR BOLT SPACING AND FOR ANCHOR BOLT INSTALLATION.
3. REFER TO DETAIL PACKAGE FOR TYPICAL CONDITIONS NOT SPECIFICALLY CALLED OUT OR NOTED ON PLANS.
4. ALL DIMENSIONS SHALL BE PER THE CURRENT APPROVED STAMPED SET OF ARCHITECTURAL PLANS. OUR OFFICE SHOULD BE NOTIFIED IMMEDIATELY IF DISCREPANCIES EXIST BETWEEN THE ARCHITECTURAL & STRUCTURAL PLANS.
5. CONSTRUCT CONTINUOUS FOOTINGS AT CORNERS AND INTERSECTIONS PER DETAIL 10/SD1.
6. FOUNDATION SIZES, DEPTHS, AND REINFORCEMENT SHOULD BE COORDINATED WITH THE OWNER/DEVELOPER'S SOILS ENGINEERS REPORT. SOILS ENGINEER REPORT MAY REQUIRE ADDITIONAL ITEMS NOT NOTED ON THE STRUCTURAL PLANS.
7. CLIENT/OWNER SHALL ADDRESS CORROSIVE SOIL CONDITIONS. FOR HIGH SULFATE SOIL CONDITIONS, MITIGATE PER ACI TABLE 4.3.1. THE CLIENT/OWNER SHALL HAVE A CORROSION ENGINEER PROVIDE MITIGATION RECOMMENDATIONS FOR ALL OTHER CORROSIVE SOIL CONDITIONS. CLIENT IS RESPONSIBLE TO REVIEW STRUCTURAL PLANS AND DETAILS FOR COMPLIANCE TO CORROSION ENGINEER'S RECOMMENDATIONS PRIOR TO CONSTRUCTION.

FOUNDATION LEGEND & SYMBOLS

	CONCRETE SLAB & FOOTING. FOOTING SIZE AND REINFORCING PER DETAIL SHEET SD1	F##	INDICATES PAD FOOTING PER DETAIL 6/SD1 w/ REINFORCEMENT PER SPREAD FOOTING SCHEDULE (DETAIL 18/SD1 FOR ISOLATED PAD FOOTING).
	CONCRETE CURB PER ARCH. FOOTING SIZE AND REINFORCING PER DETAIL SHEET SD1	CF##	INDICATES CONTINUOUS FOOTING PER DETAIL SHEET SD1. FOOTING SIZE AND REINFORCING PER PER CONTINUOUS FOOTING SCHEDULE
AT XX" O.C. X, XX — ANCHOR /SPACING, DETAIL #, SHEET #	INDICATES: DETAIL CUT LOCATION. REFER TO DETAIL # AND STRUCTURAL SHEET NUMBER FOR MORE INFORMATION. TEXT ABOVE BUBBLE INDICATES REVISED HARDWARE OTHER THAN NOTED IN DETAIL		
END POST W/ HOLDOWN; TYPE X; WALL CALC ID L-XX / -WX — LENGTH	INDICATES: WOOD SHEAR WALL LOCATION. REFER TO DETAIL 8/SD1 FOR ANCHOR BOLT SIZE & SPACING AT EACH SHEAR WALL TYPE. PROVIDE 3" SQ x 0.229" ANGLE SLOTTED PLATE WASHERS AT EACH ANCHOR BOLT. REDUCE BOLT SPACING BY HALF AT DOUBLE SIDED SHEAR WALLS.		

SPREAD FOOTING SCHEDULE

FOOTING MARK	CONCRETE FOOTING SIZE		STEEL REINFORCING
	WIDTH X LENGTH	EMBEDMENT	
F36	36" x 36"	18"	(4)-#5 BARS EACH WAY AT TOP & BTM
F42	42" x 42"	18"	(5)-#5 BARS EACH WAY AT TOP & BTM
F84	84" x 84"	18"	(7)-#6 BARS EACH WAY AT TOP & BTM

CONTINUOUS FOOTING SCHEDULE

FOOTING MARK	CONCRETE FOOTING SIZE		STEEL REINFORCING	
	WIDTH X DEPTH	EMBEDMENT	CONTINUOUS LONGITUDINAL BARS	TRANSVERSE BARS
CF20	20" x 12"	12"	(2) #5 T&B	#4 AT 18" O.C.

STRUCTURAL OBSERVATION REQUIREMENTS

STRUCTURAL OBSERVATION IS REQUIRED BY THE ENGINEER OF RECORD. OUR OFFICE SHOULD BE NOTIFIED TO PERFORM STRUCTURAL OBSERVATION AT THE FOLLOWING STAGES OF CONSTRUCTION:

1. PRIOR TO POUR OF CONCRETE TO OBSERVE REINFORCING & EMBEDS
2. WOOD FRAMING OBSERVATION PRIOR TO COVERING w/ FINISH & AFTER ROOF LOAD

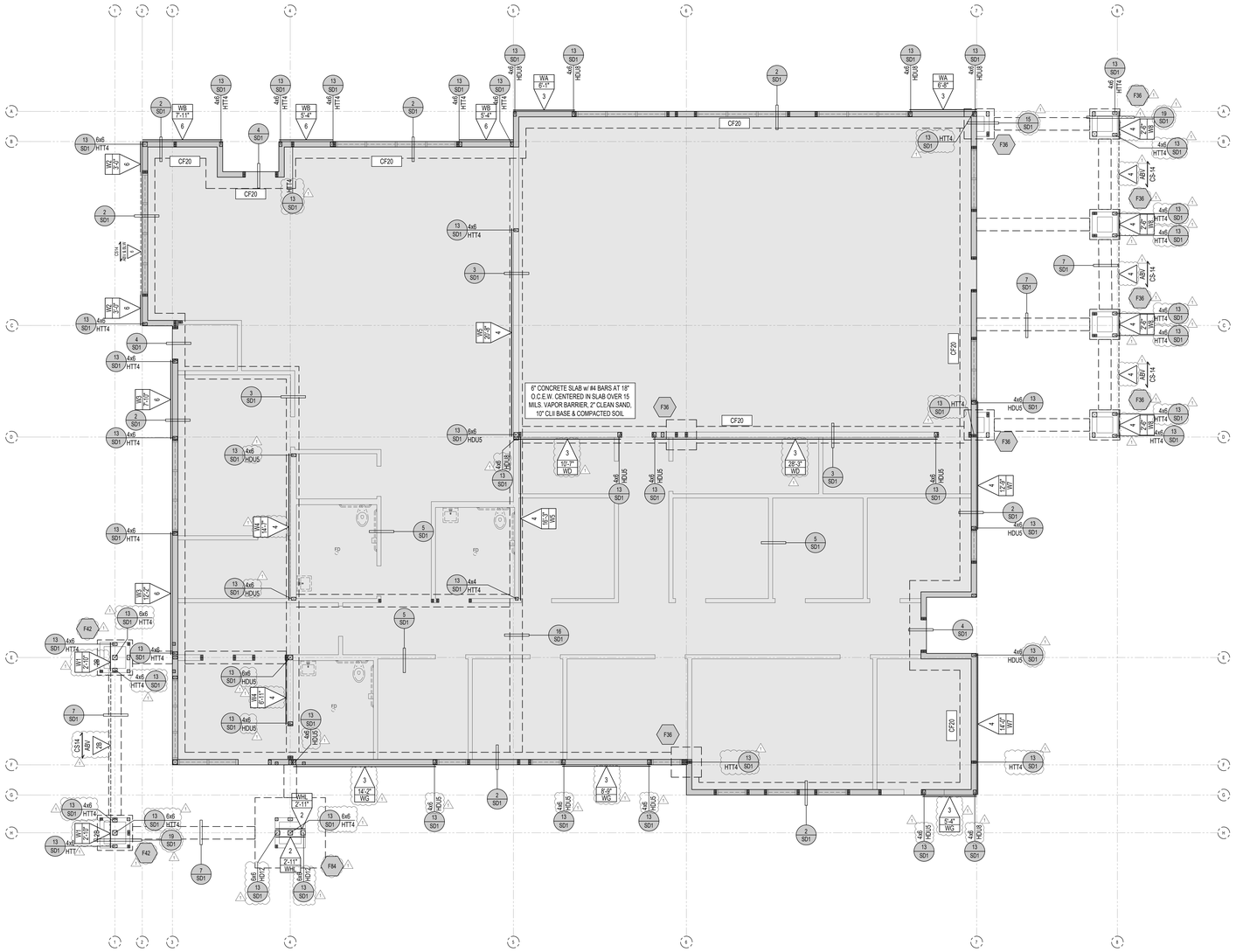

ADMIN. BUILDING FOUNDATION PLAN

SCALE : 3/16" = 1'-0"

DO NOT SCALE PLANS FOR CONSTRUCTION DIMENSIONS. ALL CONSTRUCTION DIMENSIONS SHOULD BE VERIFIED WITH THE ARCHITECTURAL SET OF PLANS

02/24/2026 11:24AM W:\8400 - STK\8400.67 - Perris Fire Station\02 - Drawings\Plans - Admin Bldg.dwg

STK
42095 ZEVO DR., TEMECULA, CALIFORNIA 92590-3780
Phone: 951.296.9110 Fax: 951.296.6079 Email: stk@stkinc.com

CONSULTANT:

ISE
2 7 3 6 9 . V I A I N D U S T R I A
T E M E C U L A , C A 9 2 5 9 0
T E L E : 9 5 1 . 6 0 0 . 0 0 3 2
W W W . I S E E N G I N E E R S . C O M
S O C A L | N O R C A L | C O L O R A D O

ISE PROJECT NO.: 24-8400.67

PROJECT MANAGER:
SANDY FONG EXT. 1016
SANDY@ISEENGINEERS.COM

PROJECT ADMINISTERED BY:
CITY OF PERRIS

101 NORTH "D" STREET
PERRIS, CA 92570

PROJECT NAME:
FIRE STATION 105 AND ADMINISTRATION BUILDING

PROJECT CIP: F077

2495 MURRIETA ROAD
PERRIS, CA 92585

ISSUE INFORMATION:

DATE:	INFORMATION:
11-26-25	95% CD SUBMITTAL
02-05-26	1 BLDG. & SAFETY 1st PLAN CHECK

SHEET INFORMATION:

STK PROJECT NO.:	365-03-25
SCALE:	AS NOTED
DATE:	FEBRUARY 2026
PLOT DATE:	–
DRAWN BY:	SF

SEAL:

REGISTERED PROFESSIONAL ENGINEER — SANDY FONG — C89965 — CIVIL — STATE OF CALIFORNIA

SHEET TITLE:
ADMIN. BUILDING FOUNDATION PLAN

SHEET NO.:
S4

FRAMING LEGEND & SYMBOLS

AT XX" O.C. — REQ. HDWR SPACING X — DETAIL # XX — SHEET #	INDICATES DETAIL CUT LOCATION. REFER TO DETAIL # AND STRUCTURAL SHEET NUMBER FOR MORE INFORMATION. TEXT ABOVE BUBBLE INDICATES REVISED HARDWARE OTHER THAN NOTED IN DETAIL
	INDICATES 2x4 STUD WALL PER PLAN & DETAIL 5/SD2. COORDINATE STUD WALL SIZE WITH ARCH. PLANS.
	INDICATES 2x6 STUD WALL PER PLAN & DETAIL 5/SD2. COORDINATE STUD WALL SIZE WITH ARCH. PLANS.
XX	INDICATES: 1. WALL OPENING HEADER PER FRAMING SCHEDULE BELOW 2. PROVIDE (1) 2x TRIMMER EACH SIDE U.N.O. ON PLAN 3. PROVIDE KING STUDS EACH SIDE PER DETAIL 5/SD2 U.N.O. ON PLAN.
XX HU BM TO BM HGR TYP., U.N.O. PER PLAN AS OCCURS. USE CONCEALED FLANGE HGR AS NEEDED	INDICATES: 1. BEAM AS NOTED ON PLANS 2. PROVIDE BEARING STUDS OR POST EACH END TO MATCH WIDTH OF BEAM AND SUPPORT WALL , U.N.O. 3. (1) 2x WALL STUD ALIGNED AT 1 ½" WIDE LSL BEAMS IS ACCEPTABLE 4. BEAM SHOULD BE INSTALLED WITH BOTTOM ON TOP PLATE U.N.O.

*S	INDICATES: 1. WOOD MANUFACTURED PLATED ROOF TRUSS BY OTHERS AT 24" O.C. 2. ARROWHEADS INDICATE EXTENT OF SPAN AND BEARING LOCATIONS 3. *S = SCISSOR TRUSS W/ SLOPED BOTTOM CHORD PER ARCHITECT AS OCCURS
GT-X.X	INDICATES: 1. GIRDER TRUSS W/ LATERAL LOAD 180 PLF (0.7E), U.N.O. 2. PROVIDE BEARING STUDS OR POST EACH END TO MATCH WIDTH OF GIRDER AND SUPPORT WALL, U.N.O. 3. TRUSS TO TRUSS HANGERS SHALL BE SPECIFIED BY TRUSS DESIGNER 4. PROVIDE ROOF DIAPHRAGM EDGE NAILING TO GIRDER
AT-X.X	INDICATES ALIGNED TRUSS W/ LATERAL LOAD 180 PLF (0.7E SEISMIC), U.N.O. & PROVIDE ROOF DIAPHRAGM EDGE NAILING
JOIST DEPTH (IN.) — JOIST SPAC. (IN. O.C.) — XX-XX-XX — JOIST TYPE (SEE SHT. SN1)	INDICATES FLOOR I-JOIST SPAN, DIRECTION, DEPTH, SPACING AND TYPE OF FLOOR I-JOISTS PER TABLE AT RIGHT. REFER TO "FLOOR JOIST SPECIFICATIONS" ON SHEET SN1 FOR MANUF ALT
A	INDICATES TOP PLATE SPLICE PER SCHEDULE (REF. DETAIL 4/SD2) IN THE WALL BELOW AT THE INDICATED GRIDLINE. USE TOP PLATE SPLICE 'A' UNLESS NOTED OTHERWISE IN PLAN.

I-JOIST SPECIFICATIONS

TYPE	MANF	TYPE	SIZE - DEPTH (IN)
A	TJI	110	14
B	TJI	210	14
C	TJI	230	14
D	TJI	360	14
E	TJI	560	14

END POST W/ HOLDOWN TYPE WALL CALC ID LENGTH L=X W=X	
END POST W/ HOLDOWN TYPE LENGTH WALL CALC ID L=X W=X XXX	INDICATES SHEAR TYPE ABV & BLW OPENING INDICATES HORIZ. STRAP ABV & BLW OPENING

	IDENTIFIES CALIFORNIA FILL ROOF FRAMING OVER STRUCTURAL ROOF PER DETAIL 11/SD4
	INDICATES: 1. WOOD SHEAR WALL PANEL LOCATION PER PLAN INSTALLED FULL HEIGHT OF WALL 2. REFER TO DETAIL 1/SD2 SHEAR WALL SCHEDULE FOR ADDITIONAL REQUIREMENTS 3. PROVIDE POST AND STRAP/HOLDOWN EACH END OF WALL MIN AS INDICATED PER PLAN 4. AT UPPER FLOORS WHERE WALL SHEATHING DOES NOT EXTEND AND EDGE NAIL TO FLOOR RIM PROVIDE SILL PLATE NAILING OR SCREWS PER DETAIL 1/SD2
	INDICATES: 1. WOOD SHEAR WALL PANEL LOCATION PER PLAN INSTALLED FULL HEIGHT OF WALL AND SHEAR PANEL ABOVE AND BELOW OPENING 2. REFER TO DETAIL 1/SD2 SHEAR WALL SCHEDULE FOR ADDITIONAL REQUIREMENTS 3. PROVIDE POST AND STRAP/HOLDOWN EACH END OF WALL MIN AS INDICATED PER PLAN 4. AT UPPER FLOORS WHERE WALL SHEATHING DOES NOT EXTEND AND EDGE NAIL TO FLOOR RIM PROVIDE SILL PLATE NAILING OR SCREWS PER DETAIL 1/SD2 5. REFER TO DETAIL 5B/SD2 FOR PERFORATED SHEAR WALL CONDITION (SHEAR ABV AND BLW OPENING W/O STRAP) 6. REFER TO DETAIL 5C/SD2 FOR FORCE TRANSFER SHEAR WALL CONDITION (SHEAR ABV AND BLW OPENING W/ STRAP)

FRAMING NOTES

1. REFER TO STRUCTURAL GENERAL NOTE SHEET (SN SERIES) AND DETAILS (SD SERIES) FOR INFORMATION NOT SHOWN ON THE MAIN FRAMING PLANS.
2. REFER TO MAIN FRAMING PLAN FOR ALL INFORMATION NOT SHOWN ON THE ALTERNATE ELEVATIONS AND OPTIONS.
3. PROVIDE SQUASH BLOCKING AT THE FLOOR LEVELS ALIGNED BELOW ALL POSTS GREATER THAN 4x4 TO MATCH THE DIMENSIONS OF THE POSTS ABOVE TYPICAL AT DROP BEAMS AND STUD WALLS.
4. FRAMER & TRUSS MANUFACTURER TO COORDINATE JOIST AND TRUSS SPACING WITH M.E.P. DESIGNS. FRAMER TO REVIEW MECH. AND ELECTRIC PLANS BEFORE FINAL PLACEMENT OF JOISTS AND/OR TRUSSES. WHERE ALIGNED JOIST AND/OR TRUSS INTERFERES w/ FUTURE INSTALLATION OF M.E.P. INSTALLATION, CONTACT STRUCTURAL ENGINEER.
5. SPLICE ALL EXTERIOR WALL AND INTERIOR SHEAR WALL TOP PLATE BREAKS PER DETAIL 4/SD2, TYP.
6. ROOF SHOULD BE FULLY LOADED PRIOR TO NAILING THE TOP PLATE HARDWARE TO ROOF TRUSS BOTTOM CHORD.

TENSION STRAP L=X'-XX"	INDICATES: DRAG TIE STRAP TO ROOF/FLOOR BLK'G LENGTH SHOWN INDICATES STRAP LENGTH OFF WALL
	INDICATES: DRAG TIE STRAP PER PLAN OR DETAIL SHOWN ON PLANS.
	IDENTIFIES BLOCKED HORIZONTAL DIAPHRAGM w/ 2x4 FLAT BLOCKING AT PANEL EDGES & 6" O.C. BOUNDARY & EDGE NAILING PER DETAIL 2A/SD2



CLERESTORY ROOF FRAMING PLAN

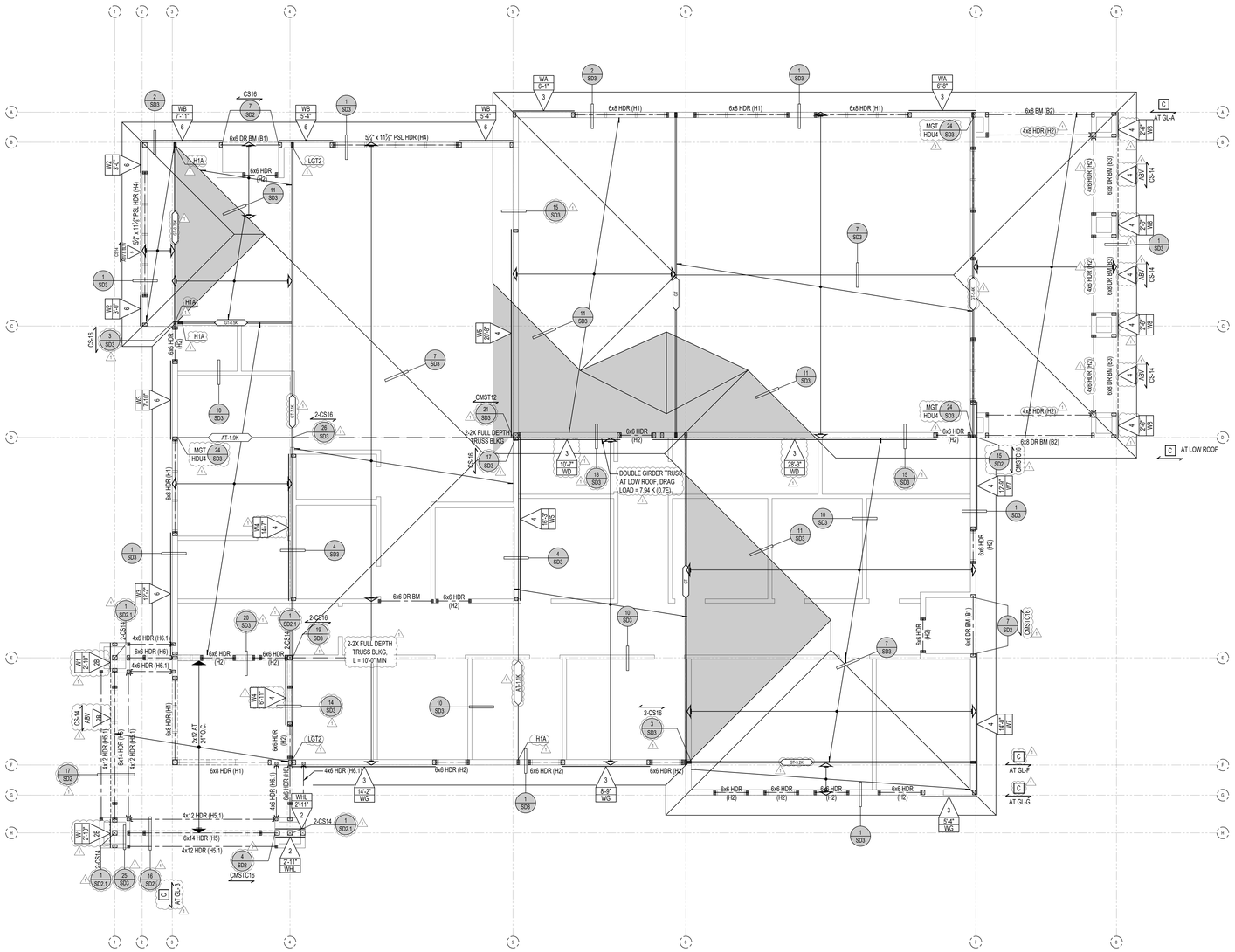

ADMIN. BUILDING ROOF FRAMING PLAN

SCALE : 3/16" = 1'-0"

DO NOT SCALE PLANS FOR CONSTRUCTION DIMENSIONS. ALL CONSTRUCTION DIMENSIONS SHOULD BE VERIFIED WITH THE ARCHITECTURAL SET OF PLANS

02/24/2026 11:24AM W:\8400 - STK\8400-07 - Perris Fire Station\SD - Drawings\Plans - Admin Bldg.dwg

STK
42095 ZEVO DR., TEMECULA, CALIFORNIA 92590-3780
Phone: 951.296.9110 Fax: 951.296.6079 Email: stk@stkinc.com

CONSULTANT:

ISE
STRUCTURAL ENGINEERS
27369 VIA INDUSTRIA
TEMECULA, CA 92590
TEL: 951.600.0032
WWW.ISEENGINEERS.COM
SOCAL | NORCAL | COLORADO
ISE PROJECT NO.: 24-8400.67

PROJECT MANAGER:
SANDY FONG EXT. 1016
SANDY@ISEENGINEERS.COM

REVIEWED FOR CODE COMPLIANCE

THESE PLANS AND SPECIFICATIONS SHALL BE FOUND TO BE IN CONFORMANCE WITH THE CODES ADOPTED BY THE JURISDICTION. ITS REVIEW AND APPROVAL IS SUBJECT TO APPROVAL BY OTHER DEPARTMENTS HAVING JURISDICTION OVER THE PROJECT. THE APPROVAL OF ALL PLANS AND SPECIFICATIONS AND ANY AMENDMENTS THEREOF SHALL NOT RELIEVE THE OWNER OR HIS AGENTS, ARCHITECTS, ENGINEERS OR CONTRACTOR OF RESPONSIBILITY FOR COMPLIANCE WITH ALL APPLICABLE CODES, ORDINANCES AND REGULATIONS. CONSTRUCTION DOCUMENTS DETERMINED TO BE IN VIOLATION OF ANY FEDERAL, STATE OR LOCAL LAW SHALL BE REVISED IN VIOLATION OF ANY FEDERAL, STATE OR LOCAL LAW.

BUILDING BUREAU SUBMITTAL INC.
REVIEWED BY: STEVEN MORALES

APPROVAL OF THESE PLANS DOES NOT PERMIT THE VIOLATION OF ANY SECTION OF THE CODES, NOR WILL IT BE CONSTRUED TO BE AN APPROVAL OF ANY VIOLATION OF THE CODES OR OTHER ORDINANCES OF THE JURISDICTION. PERMITS PRESUMING TO GIVE AUTHORITY TO VIOLATE OR CANCEL THE PROVISIONS OF THE CODES OR OTHER ORDINANCES OF THE JURISDICTION SHALL NOT BE VALID. THE ISSUANCE OF A PERMIT BASED ON PLANS, SPECIFICATIONS AND OTHER DATA SHALL NOT PREVENT THE BUILDING OFFICIAL FROM REQUIRING THE CORRECTION OF ERRORS IN THE PLANS, SPECIFICATIONS AND OTHER DATA. THE BUILDING OFFICIAL IS AUTHORIZED TO PREVENT OCCUPANCY OR USE OF A STRUCTURE WHERE IN VIOLATION OF THE CODES OR OTHER ORDINANCES OF THIS JURISDICTION.

PROJECT ADMINISTERED BY:

CITY OF PERRIS

101 NORTH "D" STREET
PERRIS, CA 92570

PROJECT NAME:

FIRE STATION 105 AND ADMINISTRATION BUILDING

PROJECT CIP: F077

2495 MURRIETA ROAD
PERRIS, CA 92585

ISSUE INFORMATION:

DATE:	INFORMATION:
11-26-25	95% CD SUBMITTAL
02-05-26	1 BLDG. & SAFETY 1st PLAN CHECK

SHEET INFORMATION:

STK PROJECT NO.:	365-03-25
SCALE:	AS NOTED
DATE:	FEBRUARY 2026
PLOT DATE:	–
DRAWN BY:	SF

SEAL:

REGISTERED PROFESSIONAL ENGINEER SANDY FONG 08/31/27 C83985 CIVIL STATE OF CALIFORNIA

SHEET TITLE:

ADMIN. BUILDING ROOF FRAMING PLAN

SHEET NO.:

S5

Tower Building Roof Vertical Wind Pressures (Unfactored)		
Zone	P_{max} (psf)	P_{min} (psf)
1	20.6	-46.6
2r	20.6	-60.4
2e, 3	20.6	-65.1
b = 3'-0"		

Admin Building Roof Vertical Wind Pressures (Unfactored)		
Zone	P_{max} (psf)	P_{min} (psf)
1	18.9	-32.4
2r	18.9	-55.4
2e, 3	18.9	-42.9
a = 7'-7"		

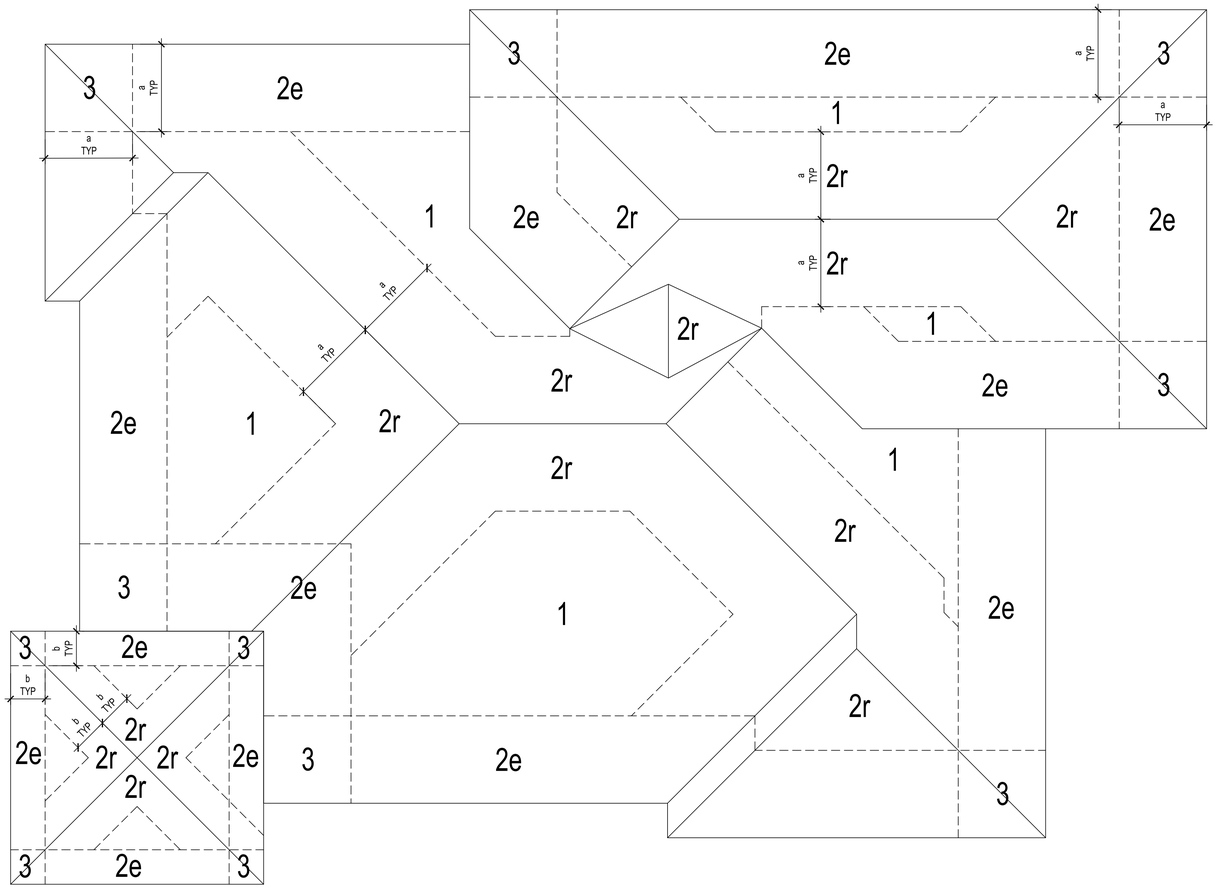

ADMIN. BUILDING ROOF WIND LOAD DIAGRAM

SCALE : 3/16" = 1'-0"

DO NOT SCALE PLANS FOR CONSTRUCTION DIMENSIONS. ALL CONSTRUCTION DIMENSIONS SHOULD BE VERIFIED WITH THE ARCHITECTURAL SET OF PLANS

STK
42095 ZEVO DR., TEMECULA, CALIFORNIA 92590-3780
Phone: 951.296.9110 Fax: 951.296.6079 Email: stk@stkinc.com

CONSULTANT:

ISE
STRUCTURAL ENGINEERS
2 7 3 6 9 V I A I N D U S T R I A
T E M E C U L A , C A 9 2 5 9 0
T E L E 9 5 1 . 6 9 0 . 0 0 3 2
W W W . I S E E N G I N E E R S . C O M
SOCAL | NORCAL | COLORADO
ISE PROJECT NO.: 24-8400.67

PROJECT MANAGER:
SANDY FONG EXT. 1016
SANDY@ISEENGINEERS.COM

PROJECT ADMINISTERED BY:
CITY OF PERRIS

101 NORTH "D" STREET
PERRIS, CA 92570

PROJECT NAME:
FIRE STATION 105 AND ADMINISTRATION BUILDING

PROJECT CIP: F077

2495 MURRIETA ROAD
PERRIS, CA 92585

ISSUE INFORMATION:

DATE:	INFORMATION:
11-26-25	95% CD SUBMITTAL
02-05-26	1 BLDG. & SAFETY 1st PLAN CHECK

SHEET INFORMATION:

STK PROJECT NO.:	365-03-25
SCALE:	AS NOTED
DATE:	FEBRUARY 2026
PLOT DATE:	–
DRAWN BY:	SF

SEAL:

REGISTERED PROFESSIONAL ENGINEER
SANDY FONG
C88985
CIVIL
STATE OF CALIFORNIA

SHEET TITLE:
ADMIN. BUILDING ROOF WIND LOAD DIAGRAM

SHEET NO.:
S5.1

REVIEWED FOR DESIGN COMPLIANCE
THESE PLANS AND SPECIFICATIONS HAVE BEEN FOUND TO BE IN SUBSTANTIAL COMPLIANCE WITH THE STATE BUILDING CODES IN JURISDICTION. ITEMS NOTED ON THE PLANS ARE SUBJECT TO APPROVAL BY OTHER AGENCIES HAVING JURISDICTION OVER THE PROJECT. THE CONTRACTOR IS RESPONSIBLE FOR OBTAINING THE APPROVAL OF ALL AGENCIES HAVING JURISDICTION. APPROVAL NOT TO RELIEVE THE OWNER OR THE OWNER'S AGENT OR CONTRACTOR OF RESPONSIBILITY FOR COMPLIANCE WITH THE CONSTRUCTION DOCUMENTS OR FOR CONSTRUCTION PERFORMED IN VIOLATION OF ANY FEDERAL, STATE OR LOCAL LAWS.
BUILDING BUREAU VOLUNTEERING INC.
REVIEWED BY: STEVEN ROMERO
DATE: 02/05/2026
THIS REVIEW DOES NOT INCLUDE STRUCTURAL, ACCESS, MECHANICAL, ELECTRICAL, PLUMBING, ENERGY, FIRE PROTECTION OR OTHER DEPARTMENTS.

W:\8400 - STK\8400.67 - Perris Fire Station\02 - Drawings\Plans - Admin Bldg.dwg
02/03/2026 4:13PM

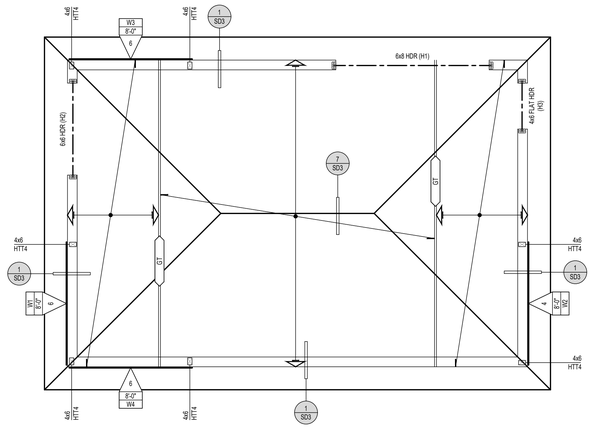

STORAGE BUILDING 1 ROOF FRAMING PLAN

SCALE : 1/4" = 1'-0"

DO NOT SCALE PLANS FOR CONSTRUCTION DIMENSIONS. ALL CONSTRUCTION DIMENSIONS SHOULD BE VERIFIED WITH THE ARCHITECTURAL SET OF PLANS

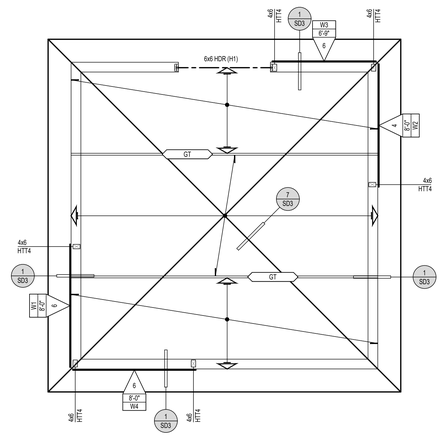

STORAGE BUILDING 2 ROOF FRAMING PLAN

SCALE : 1/4" = 1'-0"

DO NOT SCALE PLANS FOR CONSTRUCTION DIMENSIONS. ALL CONSTRUCTION DIMENSIONS SHOULD BE VERIFIED WITH THE ARCHITECTURAL SET OF PLANS

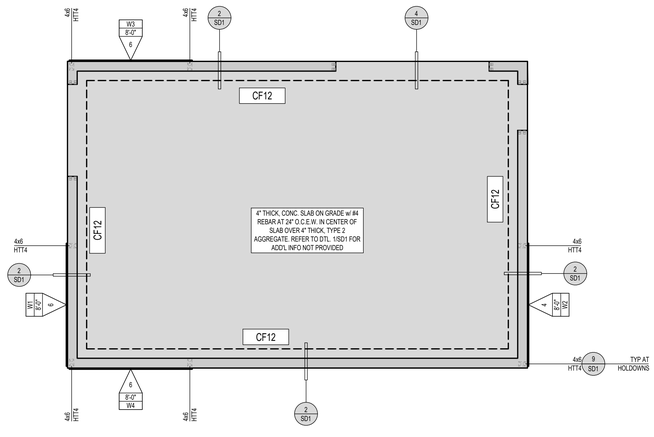

STORAGE BUILDING 1 FOUNDATION PLAN

SCALE : 1/4" = 1'-0"

DO NOT SCALE PLANS FOR CONSTRUCTION DIMENSIONS. ALL CONSTRUCTION DIMENSIONS SHOULD BE VERIFIED WITH THE ARCHITECTURAL SET OF PLANS

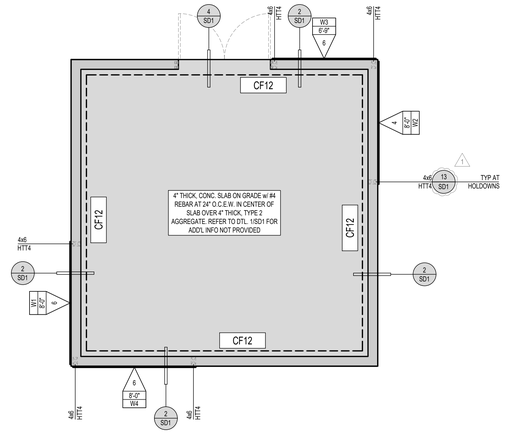

STORAGE BUILDING 2 FOUNDATION PLAN

SCALE : 1/4" = 1'-0"

DO NOT SCALE PLANS FOR CONSTRUCTION DIMENSIONS. ALL CONSTRUCTION DIMENSIONS SHOULD BE VERIFIED WITH THE ARCHITECTURAL SET OF PLANS

FRAMING NOTES

1. REFER TO STRUCTURAL GENERAL NOTE SHEET (SN SERIES) AND DETAILS (SD SERIES) FOR INFORMATION NOT SHOWN ON THE MAIN FRAMING PLANS.
2. PROVIDE SQUASH BLOCKING AT THE FLOOR LEVELS ALIGNED BELOW ALL POSTS GREATER THAN 4x4 TO MATCH THE DIMENSIONS OF THE POSTS ABOVE TYPICAL AT DROP BEAMS AND STUD WALLS.
3. FRAMER & TRUSS MANUFACTURER TO COORDINATE JOIST AND TRUSS SPACING WITH M.E.P. DESIGNS. FRAMER TO REVIEW MECH. AND ELECTRIC PLANS BEFORE FINAL PLACEMENT OF JOISTS AND/OR TRUSSES. WHERE ALIGNED JOIST AND/OR TRUSS INTERFERES w/ FUTURE INSTALLATION OF M.E.P. INSTALLATION. CONTACT STRUCTURAL ENGINEER.
4. SPLICE ALL EXTERIOR WALL AND INTERIOR SHEAR WALL TOP PLATE BREAKS PER DETAIL 4/SD2, TYP.
5. ROOF SHOULD BE FULLY LOADED PRIOR TO NAILING THE TOP PLATE HARDWARE TO ROOF TRUSS BOTTOM CHORD.

FRAMING LEGEND & SYMBOLS

AT XX" O.C. X XX — REQUIRED ANCHOR/SPACING; DETAIL #; SHEET #	INDICATES DETAIL CUT LOCATION. REFER TO DETAIL # AND STRUCTURAL SHEET NUMBER FOR MORE INFORMATION. TEXT ABOVE BUBBLE INDICATES REVISED HARDWARE OTHER THAN NOTED IN DETAIL
	INDICATES 2x4 STUD WALL PER PLAN & DETAIL 5/SD2. COORDINATE STUD WALL SIZE WITH ARCH. PLANS.
	INDICATES 2x6 STUD WALL PER PLAN & DETAIL 5/SD2. COORDINATE STUD WALL SIZE WITH ARCH. PLANS.
XX	INDICATES: 1. WALL OPENING HEADER PER FRAMING SCHEDULE BELOW 2. PROVIDE (1) 2x TRIMMER EACH SIDE U.N.O. ON PLAN 3. PROVIDE KING STUDS EACH SIDE PER DETAIL 5/SD2 U.N.O. ON PLAN.
XX — HU BM TO BM HGR TYP. U.N.O. PER PLAN AS OCCURS. USE CONCEALED FLANGE HGR AS NEEDED	INDICATES: 1. BEAM AS NOTED ON PLANS 2. PROVIDE BEARING STUDS OR POST EACH END TO MATCH WIDTH OF BEAM AND SUPPORT WALL , U.N.O. 3. (1) 2x WALL STUD ALIGNED AT 1 ½" WIDE LSL BEAMS IS ACCEPTABLE 4. BEAM SHOULD BE INSTALLED WITH BOTTOM ON TOP PLATE U.N.O.
*S	INDICATES: 1. WOOD MANUFACTURED PLATED ROOF TRUSS BY OTHERS AT 24" O.C. 2. ARROWHEADS INDICATE EXTENT OF SPAN AND BEARING LOCATIONS 3. *S = SCISSOR TRUSS W/ SLOPED BOTTOM CHORD PER ARCHITECT AS OCCURS
GT-X.X	INDICATES: 1. GIRDER TRUSS W/ LATERAL LOAD 180 PLF (0.7E), U.N.O. 2. PROVIDE BEARING STUDS OR POST EACH END TO MATCH WIDTH OF GIRDER AND SUPPORT WALL , U.N.O. 3. TRUSS TO TRUSS HANGERS SHALL BE SPECIFIED BY TRUSS DESIGNER 4 PROVIDE ROOF DIAPHRAGM EDGE NAILING TO GIRDER
AT-X.X	INDICATES ALIGNED TRUSS W/ LATERAL LOAD 180 PLF (0.7E SEISMIC), U.N.O. & PROVIDE ROOF DIAPHRAGM EDGE NAILING
END POST W/ HOLDOWN; TYPE; WALL CALC ID; LENGTH	INDICATES: 1. WOOD SHEAR WALL PANEL LOCATION PER PLAN INSTALLED FULL HEIGHT OF WALL 2. REFER TO DETAIL 1/SD2 SHEAR WALL SCHEDULE FOR ADDITIONAL REQUIREMENTS 3. PROVIDE POST AND STRAP/HOLDOWN EACH END OF WALL MIN AS INDICATED PER PLAN 4. AT UPPER FLOORS WHERE WALL SHEATHING DOES NOT EXTEND AND EDGE NAIL TO FLOOR RIM PROVIDE SILL PLATE NAILING OR SCREWS PER DETAIL 1/SD2
TENSION STRAP L=X'-XX"	INDICATES: DRAG TIE STRAP TO ROOF/FLOOR BLK'G LENGTH SHOWN INDICATES STRAP LENGTH OFF WALL
	INDICATES: DRAG TIE STRAP PER PLAN OR DETAIL SHOWN ON PLANS.

GEOTECHNICAL INFORMATION

1. REFER TO STRUCTURAL COVER SHEET (SCS) FOR ASSUMED SOIL VALUES OR VALUES BASED ON THE PROVIDED GEOTECHNICAL (SOILS) REPORT:
2. PRIOR TO REQUESTING A BUILDING DEPARTMENT FOUNDATION INSPECTION, THE SOILS ENGINEER SHALL CERTIFY IN WRITING THAT:
   a. THE BUILDING PAD WAS PREPARED IN ACCORDANCE WITH THE RECOMMENDATIONS IN THE SOILS REPORT,
   b. THE FOOTINGS EXTEND TO THE PROPER DEPTH OR BEARING STRATA,
   c. UTILITY TRENCHES ARE PROPERLY BACKFILLED AND COMPACTED,
   d. AND THAT THE CONDITIONS FOUND MATCH THOSE ASSUMED IN THE SOILS REPORT.
3. THE OWNER/DEVELOPER AND SUBCONTRACTORS ARE TO REVIEW THE SOILS REPORT PRIOR TO COMMENCING CONSTRUCTION AND VERIFY THE PLANS COMPLY WITH THE CURRENT SOILS REPORT RECOMMENDATIONS. THE STRUCTURAL ENGINEER SHALL BE NOTIFIED IF THE SOILS REPORT DATE SHOWN ON SHEET (SCS) DOES NOT MATCH THE CURRENT REPORT DATE. THE OWNER/DEVELOPER IS RESPONSIBLE FOR UPDATING THE STRUCTURAL ENGINEER WITH CURRENT GEOTECHNICAL ENGINEERING REQUIREMENTS.

FOUNDATION NOTES

1. INSTALL HOLDOWN ANCHOR BOLTS PER 13/SD1. PROVIDE AND INSTALL ALL U.S.P. OR SIMPSON LUMBER CONNECTORS (OR EQUAL) FOUNDATION HARDWARE PER MANUFACTURERS RECOMMENDATIONS. DEEPEN FOOTING WHERE NECESSARY TO PROVIDE ANCHOR EMBEDMENT AT HOLDOWN LOCATIONS.
2. REFER TO SHEARWALL SCHEDULE 8/SD1 FOR ANCHOR BOLT SPACING AND FOR ANCHOR BOLT INSTALLATION.
3. REFER TO DETAIL PACKAGE FOR TYPICAL CONDITIONS NOT SPECIFICALLY CALLED OUT OR NOTED ON PLANS.
4. ALL DIMENSIONS SHALL BE PER THE CURRENT APPROVED STAMPED SET OF ARCHITECTURAL PLANS. OUR OFFICE SHOULD BE NOTIFIED IMMEDIATELY IF DISCREPANCIES EXIST BETWEEN THE ARCHITECTURAL & STRUCTURAL PLANS.
5. CONSTRUCT CONTINUOUS FOOTINGS AT CORNERS AND INTERSECTIONS PER DETAIL 10/SD1.
6. FOUNDATION SIZES, DEPTHS, AND REINFORCEMENT SHOULD BE COORDINATED WITH THE OWNER/DEVELOPER'S SOILS ENGINEERS REPORT. SOILS ENGINEER REPORT MAY REQUIRE ADDITIONAL ITEMS NOT NOTED ON THE STRUCTURAL PLANS.
7. CLIENT/OWNER SHALL ADDRESS CORROSIVE SOIL CONDITIONS. FOR HIGH SULFATE SOIL CONDITIONS, MITIGATE PER ACI TABLE 19.3.2.1. THE CLIENT/OWNER SHALL HAVE A CORROSION ENGINEER PROVIDE MITIGATION RECOMMENDATIONS FOR ALL OTHER CORROSIVE SOIL CONDITIONS. CLIENT IS RESPONSIBLE TO REVIEW STRUCTURAL PLANS AND DETAILS FOR COMPLIANCE TO CORROSION ENGINEER'S RECOMMENDATIONS PRIOR TO CONSTRUCTION.

FOUNDATION LEGEND & SYMBOLS

CF##	CONCRETE SLAB & FOOTING PER DETAIL SHEET SD1. FOOTING SIZE AND REINFORCING PER PER CONTINUOUS FOOTING SCHEDULE
AT XX" O.C. X XX — ANCHOR /SPACING; DETAIL #; SHEET #	INDICATES: DETAIL CUT LOCATION. REFER TO DETAIL # AND STRUCTURAL SHEET NUMBER FOR MORE INFORMATION. TEXT ABOVE BUBBLE INDICATES REVISED HARDWARE OTHER THAN NOTED IN DETAIL
END POST W/ HOLDOWN; TYPE; WALL CALC ID; LENGTH	INDICATES: WOOD SHEAR WALL LOCATION. REFER TO DETAIL 8/SD1 FOR ANCHOR BOLT SIZE & SPACING AT EACH SHEAR WALL TYPE. PROVIDE 3" SQ x 0.229" ANGLE SLOTTED PLATE WASHERS AT EACH ANCHOR BOLT. REDUCE BOLT SPACING BY HALF AT DOUBLE SIDED SHEAR WALLS.

CONTINUOUS FOOTING SCHEDULE

FOOTING MARK	CONCRETE FOOTING SIZE		STEEL REINFORCING	
	WIDTH X DEPTH	EMBEDMENT	CONTINUOUS LONGITUDINAL BARS	TRANSVERSE BARS
CF12	12" x 12"	12"	(2) #4 T&B	-

STRUCTURAL OBSERVATION REQUIREMENTS

STRUCTURAL OBSERVATION IS REQUIRED BY THE ENGINEER OF RECORD. OUR OFFICE SHOULD BE NOTIFIED TO PERFORM STRUCTURAL OBSERVATION AT THE FOLLOWING STAGES OF CONSTRUCTION:

1. PRIOR TO POUR OF CONCRETE TO OBSERVE REINFORCING & EMBEDS
2. WOOD FRAMING OBSERVATION PRIOR TO COVERING w/ FINISH & AFTER ROOF LOAD

STK
42095 ZEVO DR., TEMECULA, CALIFORNIA 92590-3780
Phone: 951.296.9110 Fax: 951.296.6079 Email: stk@stkinc.com

CONSULTANT:

REVIEWED FOR CODE COMPLIANCE

ISE
STRUCTURAL ENGINEERS
2 7 3 6 9 . V I A . I N D U S T R I A
T E M E C U L A , C A 9 2 5 9 0
T E L E : 9 5 1 . 6 0 0 . 0 0 3 2
W W W . I S E E N G I N E E R S . C O M
S O C A L | N O R C A L | C O L O R A D O
ISE PROJECT NO.: 24-8400.67

PROJECT MANAGER:
SANDY FONG EXT. 1016
SANDY@ISEENGINEERS.COM

PROJECT ADMINISTERED BY:

CITY OF PERRIS

101 NORTH "D" STREET
PERRIS, CA 92570

PROJECT NAME:

FIRE STATION 105 AND ADMINISTRATION BUILDING

PROJECT CIP: F077

2495 MURRIETA ROAD
PERRIS, CA 92585

ISSUE INFORMATION:

DATE:	INFORMATION:
11-26-25	95% CD SUBMITTAL
02-05-26	1 BLDG. & SAFETY 1st PLAN CHECK

SHEET INFORMATION:

STK PROJECT NO.:	365-03-25
SCALE:	AS NOTED
DATE:	FEBRUARY 2026
PLOT DATE:	–
DRAWN BY:	SF

SEAL:

REGISTERED PROFESSIONAL ENGINEER SANDY FONG C85955 CIVIL STATE OF CALIFORNIA

SHEET TITLE:

STORAGE BUILDINGS FOUNDATION AND ROOF FRAMING PLANS

SHEET NO.:

S6

W:\ACAD - STK\8400.67 - Perris Fire Station\02 - Drawings\Plans - Site Structures.dwg
02/03/2026 4:13PM

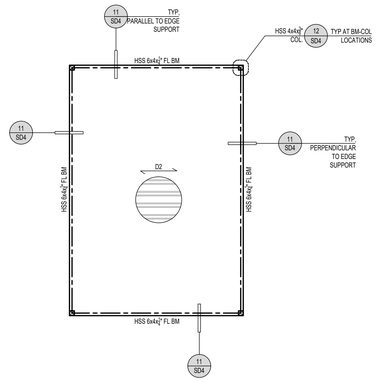

FUEL TANK CANOPY ROOF FRAMING PLAN

SCALE : 1/4" = 1'-0"

DO NOT SCALE PLANS FOR CONSTRUCTION DIMENSIONS. ALL CONSTRUCTION DIMENSIONS SHOULD BE VERIFIED WITH THE ARCHITECTURAL SET OF PLANS

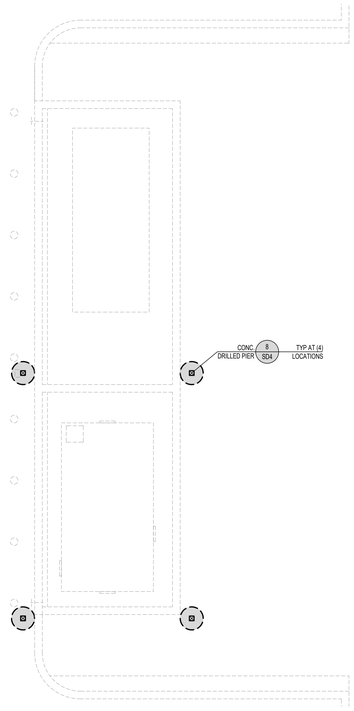

FUEL TANK CANOPY FOUNDATION PLAN

SCALE : 1/4" = 1'-0"

DO NOT SCALE PLANS FOR CONSTRUCTION DIMENSIONS. ALL CONSTRUCTION DIMENSIONS SHOULD BE VERIFIED WITH THE ARCHITECTURAL SET OF PLANS

W:\8400 - STK\8400-07 - Perris Fire Station\02 - Drawings\Plans - S\$4 Structures.dwg
02/03/2026 4:13PM

FRAMING NOTES

1. REFER TO STRUCTURAL GENERAL NOTE SHEET (SN SERIES) AND DETAILS (SD SERIES) FOR INFORMATION NOT SHOWN ON THE MAIN FRAMING PLANS.
2. FRAMER TO COORDINATE JOIST SPACING WITH M.E.P. DESIGNS. FRAMER TO REVIEW MECH. AND ELECTRIC PLANS BEFORE FINAL PLACEMENT OF JOISTS. WHERE ALIGNED JOIST INTERFERES w/ FUTURE INSTALLATION OF M.E.P. INSTALLATION, CONTACT STRUCTURAL ENGINEER.
3. SPLICE ALL EXTERIOR WALL AND INTERIOR SHEAR WALL TOP PLATE BREAKS PER DETAIL 4/SD2, TYP.
4. ROOF SHOULD BE FULLY LOADED PRIOR TO NAILING THE TOP PLATE HARDWARE TO ROOF JOIST BOTTOM CHORD.
5. WATERPROOFING & DRAINAGE SHALL BE PROVIDED BY OTHERS.

FRAMING LEGEND & SYMBOLS

AT XX" O.C. — REQUIRED ANCHOR/SPACING; X — DETAIL #; XX — SHEET #	INDICATES DETAIL CUT LOCATION. REFER TO DETAIL # AND STRUCTURAL SHEET NUMBER FOR MORE INFORMATION. TEXT ABOVE BUBBLE INDICATES REVISED HARDWARE OTHER THAN NOTED IN DETAIL
XX	INDICATES: 1. BEAM AS NOTED ON PLANS
D# — INDICATES METAL DECK SPAN & TYPE; INDICATES METAL DECK DIAPHRAGM	INDICATES METAL ROOF DECK PER PLAN. REFER TO DETAIL 4/SD4 FOR ADDITIONAL INFORMATION INCLUDING DECK TYPES.

GEOTECHNICAL INFORMATION

1. REFER TO STRUCTURAL COVER SHEET (SCS) FOR ASSUMED SOIL VALUES OR VALUES BASED ON THE PROVIDED GEOTECHNICAL (SOILS) REPORT.
2. THE OWNER/DEVELOPER AND SUBCONTRACTORS ARE TO REVIEW THE SOILS REPORT PRIOR TO COMMENCING CONSTRUCTION AND VERIFY THE PLANS COMPLY WITH THE CURRENT SOILS REPORT RECOMMENDATIONS. THE STRUCTURAL ENGINEER SHALL BE NOTIFIED IF THE SOILS REPORT DATE SHOWN ON SHEET (SCS) DOES NOT MATCH THE CURRENT REPORT DATE. THE OWNER/DEVELOPER IS RESPONSIBLE FOR UPDATING THE STRUCTURAL ENGINEER WITH CURRENT GEOTECHNICAL ENGINEERING REQUIREMENTS.

FOUNDATION NOTES

1. ALL DIMENSIONS SHALL BE PER THE CURRENT APPROVED STAMPED SET OF ARCHITECTURAL PLANS. OUR OFFICE SHOULD BE NOTIFIED IMMEDIATELY IF DISCREPANCIES EXIST BETWEEN THE ARCHITECTURAL & STRUCTURAL PLANS.
2. CONSTRUCT CONTINUOUS FOOTINGS AT CORNERS AND INTERSECTIONS PER DETAIL 10/SD1.
3. CENTER CONTINUOUS FOOTINGS UNDER WALLS U.N.O. CENTER DRILLED PIER FOOTINGS UNDER COLUMNS U.N.O.
4. FOUNDATION SIZES, DEPTHS, AND REINFORCEMENT SHOULD BE COORDINATED WITH THE OWNER/DEVELOPER'S SOILS ENGINEERS REPORT. SOILS ENGINEER REPORT MAY REQUIRE ADDITIONAL ITEMS NOT NOTED ON THE STRUCTURAL PLANS.
5. CLIENT/OWNER SHALL ADDRESS CORROSIVE SOIL CONDITIONS. FOR HIGH SULFATE SOIL CONDITIONS, MITIGATE PER ACI TABLE 19.3.2.1. THE CLIENT/OWNER SHALL HAVE A CORROSION ENGINEER PROVIDE MITIGATION RECOMMENDATIONS FOR ALL OTHER CORROSIVE SOIL CONDITIONS. CLIENT IS RESPONSIBLE TO REVIEW STRUCTURAL PLANS AND DETAILS FOR COMPLIANCE TO CORROSION ENGINEER'S RECOMMENDATIONS PRIOR TO CONSTRUCTION.
6. IN NO CASE SHALL PIPES, CONDUITS, OR SLEEVES BE EMBEDDED IN SPREAD FOOTINGS UNLESS SPECIFICALLY DETAILED ON THE STRUCTURAL DRAWINGS.

FOUNDATION LEGEND & SYMBOLS

	INDICATES: CONCRETE, DRILLED PIER FOOTING. FOOTING SIZE AND REINFORCING PER DETAIL SHEET SD4, U.N.O. PER PLAN.
AT XX" O.C. — ANCHOR /SPACING; X — DETAIL #; XX — SHEET #	INDICATES: DETAIL CUT LOCATION. REFER TO DETAIL # AND STRUCTURAL SHEET NUMBER FOR MORE INFORMATION. TEXT ABOVE BUBBLE INDICATES REVISED HARDWARE OTHER THAN NOTED IN DETAIL

STRUCTURAL OBSERVATION REQUIREMENTS

STRUCTURAL OBSERVATION IS REQUIRED BY THE ENGINEER OF RECORD. OUR OFFICE SHOULD BE NOTIFIED TO PERFORM STRUCTURAL OBSERVATION AT THE FOLLOWING STAGES OF CONSTRUCTION:

1. PRIOR TO POUR OF CONCRETE TO OBSERVE REINFORCING & EMBEDS

STK
42095 ZEVO DR., TEMECULA, CALIFORNIA 92590-3780
Phone: 951.296.9110 Fax: 951.296.6079 Email: stk@stkinc.com

CONSULTANT:

REVIEWED FOR DESIGN COMPLIANCE
THESE PLANS AND SPECIFICATIONS HAVE BEEN REVIEWED AND FOUND TO BE IN SUBSTANTIAL COMPLIANCE WITH THE 2022 CALIFORNIA BUILDING CODE FOR JURISDICTION: CITY OF PERRIS. CONSTRUCTION SHALL BE SUBJECT TO APPROVAL BY DIVISION OF THE STATE ARCHITECT. THE REVIEW AND APPROVAL OF THESE PLANS AND SPECIFICATIONS DOES NOT PERMIT THE VIOLATION OF ANY SECTION OF THE CALIFORNIA BUILDING CODE. THE APPROVAL OF ANY CONSTRUCTION OR WORK DEPICTED IN THESE DRAWINGS, NOR ISSUANCE OF A PERMIT BASED THEREON, SHALL NOT PREVENT THE BUILDING OFFICIAL FROM THEREAFTER REQUIRING THE CONTRACTOR OF OWNER TO MAKE CHANGES IN THE PLANS, SPECIFICATIONS OR OTHER CONSTRUCTION DOCUMENTS WHEN IT IS DISCOVERED THAT THE SAME ARE IN VIOLATION OF ANY FEDERAL, STATE OR LOCAL LAW.
BUILDING BUREAU VOLUNTEERING INC.
REVIEWED BY: STEVEN MCMANUS
DATE: 2/26/2026
THIS REVIEW DOES NOT RELIEVE THE OWNER, ARCHITECT, ENGINEER OR CONTRACTOR FROM COMPLIANCE WITH ALL APPLICABLE CODES, LAWS, ORDINANCES AND REGULATIONS OF ALL GOVERNMENTAL AGENCIES AND DEPARTMENTS.
ISE
STRUCTURAL ENGINEERS
27369 VIA INDUSTRIA
TEMECULA, CA 92590
TELE 951.600.0032
WWW.ISEENGINEERS.COM
SOCAL | NORCAL | COLORADO
ISE PROJECT NO.: 24-8400.67
PROJECT MANAGER:
SANDY FONG EXT. 1016
SANDY@ISEENGINEERS.COM

PROJECT ADMINISTERED BY:
CITY OF PERRIS

101 NORTH "D" STREET
PERRIS, CA 92570

PROJECT NAME:
FIRE STATION 105 AND ADMINISTRATION BUILDING

PROJECT CIP: F077

2495 MURRIETA ROAD
PERRIS, CA 92585

ISSUE INFORMATION:

DATE:	INFORMATION:
11-26-25	95% CD SUBMITTAL
02-05-26	1 BLDG. & SAFETY 1st PLAN CHECK

SHEET INFORMATION:

STK PROJECT NO.:	365-03-25
SCALE:	AS NOTED
DATE:	FEBRUARY 2026
PLOT DATE:	
DRAWN BY:	SF

SEAL:
REGISTERED PROFESSIONAL ENGINEER — SANDY FONG — C68985 — CIVIL — STATE OF CALIFORNIA

SHEET TITLE:
FUEL TANK CANOPY FOUNDATION AND ROOF FRAMING PLANS

SHEET NO.:
S7

TRASH ENCLOSURE SIDE ELEVATION (SIM.)

SCALE : 1/4" = 1'-0"

DO NOT SCALE PLANS FOR CONSTRUCTION DIMENSIONS. ALL CONSTRUCTION DIMENSIONS SHOULD BE VERIFIED WITH THE ARCHITECTURAL SET OF PLANS

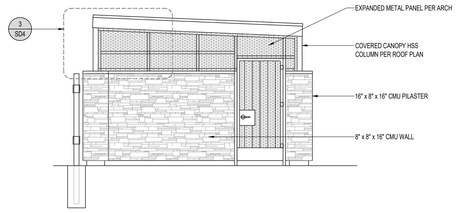

TRASH ENCLOSURE ROOF FRAMING PLAN

SCALE : 1/4" = 1'-0"

DO NOT SCALE PLANS FOR CONSTRUCTION DIMENSIONS. ALL CONSTRUCTION DIMENSIONS SHOULD BE VERIFIED WITH THE ARCHITECTURAL SET OF PLANS

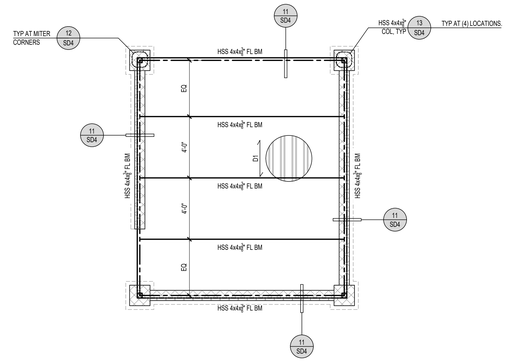

TRASH ENCLOSURE FRONT ELEVATION

SCALE : 1/4" = 1'-0"

DO NOT SCALE PLANS FOR CONSTRUCTION DIMENSIONS. ALL CONSTRUCTION DIMENSIONS SHOULD BE VERIFIED WITH THE ARCHITECTURAL SET OF PLANS

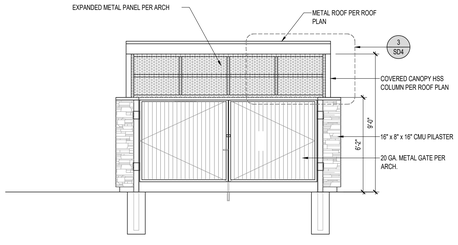

TRASH ENCLOSURE FOUNDATION PLAN

SCALE : 1/4" = 1'-0"

DO NOT SCALE PLANS FOR CONSTRUCTION DIMENSIONS. ALL CONSTRUCTION DIMENSIONS SHOULD BE VERIFIED WITH THE ARCHITECTURAL SET OF PLANS

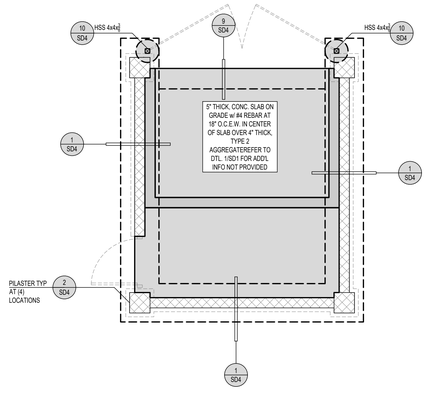

FRAMING NOTES

1. REFER TO STRUCTURAL GENERAL NOTE SHEET (SN SERIES) AND DETAILS (SD SERIES) FOR INFORMATION NOT SHOWN ON THE MAIN FRAMING PLANS.
2. FRAMER TO COORDINATE JOIST SPACING WITH M.E.P. DESIGNS. FRAMER TO REVIEW MECH. AND ELECTRIC PLANS BEFORE FINAL PLACEMENT OF JOISTS. WHERE ALIGNED JOIST INTERFERES w/ FUTURE INSTALLATION OF M.E.P. INSTALLATION, CONTACT STRUCTURAL ENGINEER.
3. SPLICE ALL EXTERIOR WALL AND INTERIOR SHEAR WALL TOP PLATE BREAKS PER DETAIL 4/SD2, TYP.
4. ROOF SHOULD BE FULLY LOADED PRIOR TO NAILING THE TOP PLATE HARDWARE TO ROOF JOIST BOTTOM CHORD.
5. WATERPROOFING & DRAINAGE SHALL BE PROVIDED BY OTHERS.

FRAMING LEGEND & SYMBOLS

AT XX" O.C. / X / XX — REQUIRED ANCHOR/SPACING; DETAIL #; SHEET #	INDICATES DETAIL CUT LOCATION. REFER TO DETAIL # AND STRUCTURAL SHEET NUMBER FOR MORE INFORMATION. TEXT ABOVE BUBBLE INDICATES REVISED HARDWARE OTHER THAN NOTED IN DETAIL
XX	INDICATES: 1. BEAM AS NOTED ON PLANS
D# — INDICATES METAL DECK SPAN & TYPE; INDICATES METAL DECK DIAPHRAGM	INDICATES METAL ROOF DECK PER PLAN. REFER TO DETAIL 4/SD4 FOR ADDITIONAL INFORMATION INCLUDING DECK TYPES.

GEOTECHNICAL INFORMATION

1. REFER TO STRUCTURAL COVER SHEET (SCS) FOR ASSUMED SOIL VALUES OR VALUES BASED ON THE PROVIDED GEOTECHNICAL (SOILS) REPORT.
2. THE OWNER/DEVELOPER AND SUBCONTRACTORS ARE TO REVIEW THE SOILS REPORT PRIOR TO COMMENCING CONSTRUCTION AND VERIFY THE PLANS COMPLY WITH THE CURRENT SOILS REPORT RECOMMENDATIONS. THE STRUCTURAL ENGINEER SHALL BE NOTIFIED IF THE SOILS REPORT DATE SHOWN ON SHEET (SCS) DOES NOT MATCH THE CURRENT REPORT DATE. THE OWNER/DEVELOPER IS RESPONSIBLE FOR UPDATING THE STRUCTURAL ENGINEER WITH CURRENT GEOTECHNICAL ENGINEERING REQUIREMENTS.

FOUNDATION NOTES

1. ALL DIMENSIONS SHALL BE PER THE CURRENT APPROVED STAMPED SET OF ARCHITECTURAL PLANS. OUR OFFICE SHOULD BE NOTIFIED IMMEDIATELY IF DISCREPANCIES EXIST BETWEEN THE ARCHITECTURAL & STRUCTURAL PLANS.
2. CONSTRUCT CONTINUOUS FOOTINGS AT CORNERS AND INTERSECTIONS PER DETAIL 10/SD1.
3. CENTER CONTINUOUS FOOTINGS UNDER WALLS U.N.O. CENTER DRILLED PIER FOOTINGS UNDER COLUMNS U.N.O.
4. FOUNDATION SIZES, DEPTHS, AND REINFORCEMENT SHOULD BE COORDINATED WITH THE OWNER/DEVELOPER'S SOILS ENGINEERS REPORT. SOILS ENGINEER REPORT MAY REQUIRE ADDITIONAL ITEMS NOT NOTED ON THE STRUCTURAL PLANS.
5. CLIENT/OWNER SHALL ADDRESS CORROSIVE SOIL CONDITIONS. FOR HIGH SULFATE SOIL CONDITIONS, MITIGATE PER ACI TABLE 19.3.2.1. THE CLIENT/OWNER SHALL HAVE A CORROSION ENGINEER PROVIDE MITIGATION RECOMMENDATIONS FOR ALL OTHER CORROSIVE SOIL CONDITIONS. CLIENT IS RESPONSIBLE TO REVIEW STRUCTURAL PLANS AND DETAILS FOR COMPLIANCE TO CORROSION ENGINEER'S RECOMMENDATIONS PRIOR TO CONSTRUCTION.
6. IN NO CASE SHALL PIPES, CONDUITS, OR SLEEVES BE EMBEDDED IN SPREAD FOOTINGS UNLESS SPECIFICALLY DETAILED ON THE STRUCTURAL DRAWINGS.

FOUNDATION LEGEND & SYMBOLS

	CONCRETE SLAB & FOOTING. FOOTING SIZE AND REINFORCING PER DETAIL SHEET SD1, U.N.O. PER PLAN.
	INDICATES: CONCRETE, CMU WALL FOOTING. FOOTING SIZE AND REINFORCING PER DETAIL SHEET SD4, U.N.O. PER PLAN.
	INDICATES: CONCRETE, DRILLED PIER FOOTING. FOOTING SIZE AND REINFORCING PER DETAIL SHEET SD4, U.N.O. PER PLAN.
AT XX" O.C. / X / XX — ANCHOR /SPACING; DETAIL #; SHEET #	INDICATES: DETAIL CUT LOCATION. REFER TO DETAIL # AND STRUCTURAL SHEET NUMBER FOR MORE INFORMATION. TEXT ABOVE BUBBLE INDICATES REVISED HARDWARE OTHER THAN NOTED IN DETAIL

STK
42095 ZEVO DR., TEMECULA, CALIFORNIA 92590-3780
Phone: 951.296.9110 Fax: 951.296.6079 Email: stk@stkinc.com

CONSULTANT:

ISE
2736 9 VIA INDUSTRIA
TEMECULA, CA 92590
TELE: 951.600.0032
WWW.ISEENGINEERS.COM
SOCAL | NORCAL | COLORADO
ISE PROJECT NO.: 24-8400.67

PROJECT MANAGER:
SANDY FONG EXT. 1016
SANDY@ISEENGINEERS.COM

REVIEWED FOR CODE COMPLIANCE

THESE PLANS AND SPECIFICATIONS HAVE BEEN REVIEWED AND FOUND TO BE IN COMPLIANCE WITH THE CODES ADOPTED BY THE JURISDICTION. ITEMS NOTED ON THE PLANS ARE SUBJECT TO APPROVAL BY OTHER DEPARTMENTS. THIS REVIEW DOES NOT RELIEVE THE OWNER OR CONTRACTOR OF RESPONSIBILITY FOR OBTAINING THE APPROVAL OF ANY OTHER DEPARTMENTS. THIS REVIEW DOES NOT RELIEVE THE OWNER OR CONTRACTOR OF RESPONSIBILITY FOR CORRECTING ERRORS, OMISSIONS OR VIOLATIONS OF ANY CODES OR REGULATIONS CONTAINED IN THE DOCUMENTS EVEN AFTER THEY HAVE BEEN REVIEWED. THIS REVIEW DOES NOT AUTHORIZE THE VIOLATION OF ANY FEDERAL, STATE OR LOCAL LAWS.

BUILDING BUREAU / CITY OF PERRIS, INC.
REVIEWED BY: STEVEN HERNANDEZ DATE: 02/05/2026

PLAN REVIEW IS FOR GENERAL CONFORMANCE WITH APPLICABLE CODES ONLY. ADDITIONAL CORRECTIONS MAY BE REQUIRED BY OTHER DEPARTMENTS.

STRUCTURAL ENGINEERS

PROJECT ADMINISTERED BY:
CITY OF PERRIS

101 NORTH "D" STREET
PERRIS, CA 92570

PROJECT NAME:
FIRE STATION 105 AND ADMINISTRATION BUILDING

PROJECT CIP: F077

2495 MURRIETA ROAD
PERRIS, CA 92585

ISSUE INFORMATION:

DATE:	INFORMATION:
11-26-25	95% CD SUBMITTAL
02-05-26	1 BLDG. & SAFETY 1st PLAN CHECK

SHEET INFORMATION:

STK PROJECT NO.:	365-03-25
SCALE:	AS NOTED
DATE:	FEBRUARY 2026
PLOT DATE:	-
DRAWN BY:	SF

SEAL:

REGISTERED PROFESSIONAL ENGINEER SANDY FONG 09-30-27 C85965 CIVIL STATE OF CALIFORNIA

SHEET TITLE:
TRASH ENCLOSURE FOUNDATION AND ROOF FRAMING PLANS

SHEET NO.:
S8

W:\8400 - STK\8400-67 - Perris Fire Station\02 - Drawings\Plans - Site Structures.dwg
02/03/2026 4:13 PM

REFER TO DETAIL 1/SD1 FOR INFORMATION NOT PROVIDED

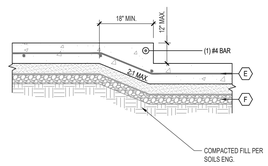

SLAB DEPRESSION 17

SCALE: N.T.S.

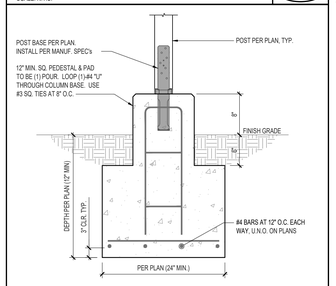

HOLDOWN SCHEDULE

HD	MIN. POST SIZE 4" WALL	MIN. POST SIZE 6" WALL	WOOD FASTENERS	A.B.	Le (IN)
HTT4	4x4	4x6	(18) #10 x 1½" SD	SSTB30	16-5/8
HDU5	4x4	4x6	(14) ⅞" x 2½" SDS	SSTB24	20-5/8
HDU8	4x6	6x6	(20) ⅞" x 2½" SDS	SSTB28	24-7/8
HDU11	4x8	6x6	(30) ⅞" x 2½" SDS	S81x30	24
HD12	4X8	6x6	(4) 1" Ø A307 BOLTS	S81x30	24

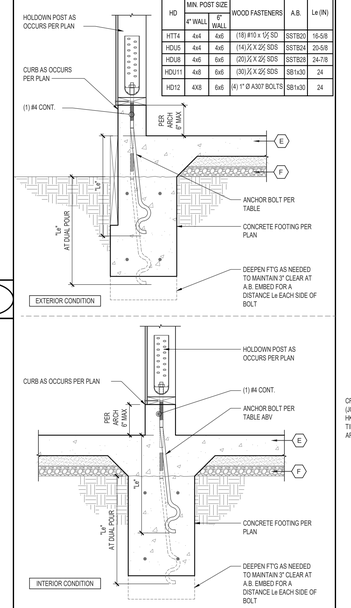

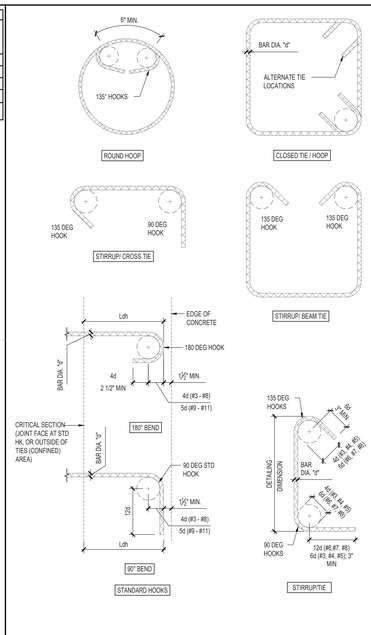

STANDARD DEVELOPMENT LENGTHS IN CONCRETE

CONCRETE STRENGTH	BAR POSITION	BAR SIZE #3	#4	#5	#6	#7	#8	#9	#10	#11
2,500 psi	TOP	24"	32"	39"	47"	69"	78"	88"	100"	110"
	BOTTOM	18"	24"	30"	36"	53"	60"	68"	77"	85"
3,000 psi	TOP	22"	29"	36"	43"	63"	72"	81"	91"	101"
	BOTTOM	17"	22"	28"	33"	48"	55"	62"	70"	78"
4,000 psi	TOP	19"	25"	31"	37"	54"	62"	70"	79"	87"
	BOTTOM	15"	19"	24"	29"	42"	48"	54"	61"	67"
5,000 psi	TOP	17"	23"	28"	34"	49"	56"	63"	71"	78"
	BOTTOM	13"	17"	22"	26"	38"	43"	48"	54"	60"

STANDARD TENSION LAP SPLICE LENGTHS IN CONCRETE

CONCRETE STRENGTH	BAR POSITION	BAR SIZE #3	#4	#5	#6	#7	#8	#9	#10	#11
2,500 psi	TOP	31"	41"	51"	61"	89"	102"	115"	129"	143"
	BOTTOM	24"	32"	39"	47"	69"	78"	88"	100"	110"
3,000 psi	TOP	28"	38"	47"	56"	81"	93"	105"	118"	131"
	BOTTOM	22"	29"	36"	43"	63"	72"	81"	91"	101"
4,000 psi	TOP	25"	33"	41"	49"	71"	81"	91"	102"	114"
	BOTTOM	19"	25"	31"	37"	54"	62"	70"	79"	87"
5,000 psi	TOP	22"	29"	36"	44"	63"	72"	81"	92"	102"
	BOTTOM	17"	23"	28"	34"	49"	56"	63"	71"	78"

STANDARD HOOK DEVELOPMENT LENGTHS IN CONCRETE

CONCRETE STRENGTH	BAR SIZE #3	#4	#5	#6	#7	#8	#9	#10	#11
2,500 psi	8"	12"	17"	22"	28"	34"	41"	48"	57"
3,000 psi	8"	12"	16"	21"	27"	32"	39"	46"	54"
4,000 psi	8"	11"	15"	20"	25"	30"	36"	43"	51"
5000 psi	7"	11"	15"	19"	24"	29"	35"	42"	49"

NOTES:
1. TABULATED VALUES ARE BASED ON A MINIMUM YIELD STRENGTH OF 60,000 PSI FOR ALL REINFORCING AND NORMAL WEIGHT CONCRETE.
2. FOR GRADE 75 REINFORCING MULTIPY THE TABULATED VALUES BY 1.25"
3. FOR LIGHTWEIGHT CONCRETE MULTIPLY THE TABULATED VALUES BY 1.3
4. "TOP" INDICATES A TOP BAR WHICH ARE DEFINED AS HORIZONTAL REINFORCING WITH MORE THAN 12" OF CONCRETE CAST BELOW THE BAR. ALL OTHER BARS, INCLUDING VERTICAL REBAR, CAN BE CONSIDERED BOTTOM REBAR.
5. LENGTHS ARE FOR UNCOATED BARS ONLY.
6. FOR HOOK DEVELOPMENT LENGTHS OF 90° HOOKS HAVING SIDE COVER OF 2.5" OR GREATER TO THE BAR AND END COVER OF 2" OR GREATER TO THE HOOK, MULTIPLY THE TABULATED VALUES BY 0.70.



LAP SPLICE

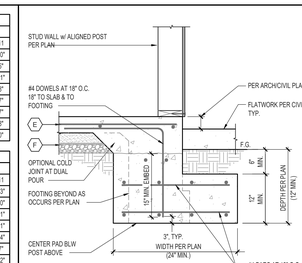

EXTERIOR CONDITION

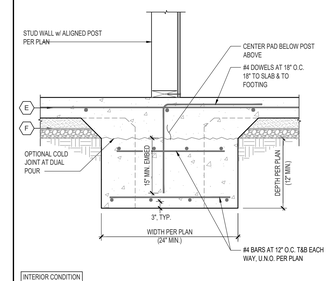

INTERIOR CONDITION

SHEAR WALL TYPE	FOUNDATION ATTACHMENT HARDWARE ALTERNATES MAXIMUM SPACING (INCHES ON CENTER) SINGLE-SIDED SHEAR WALL 5/8" Ø A.B.	SINGLE-SIDED SHEAR WALL 5/8"Ø x8" TITEN HD (ICC-ESR-2713)	SINGLE-SIDED SHEAR WALL SIMPSON MASA ANCHORS (ICC-ESR-2555)	DOUBLE-SIDED SHEAR WALL 5/8" Ø A.B.	DOUBLE-SIDED SHEAR WALL 5/8"Ø x8" TITEN HD (ICC-ESR-2713)
NON-SHEAR	72"	72"	72"	72"	72"
6	48"	40"	30"	24"	20"
4	32"	27"	21"	16"	12"
3	24"	21"	16"	12"	10"
2	18"	16"	12"	9"	8"
2A	16"	14"	11"	8"	7"
2B	14"	12"	9"	7"	6"

NOTES:
1. EMBEDMENT: ANCHOR BOLTS EMBEDMENT SHALL BE 7" EMBEDMENT INTO CONCRETE. EMBEDMENT SHALL BE FROM TOP OF SLAB AT MONOPOUR. EMBEDMENT SHALL BE AT BE FROM COLD-JOINT AT DUAL POUR CONDITIONS. AT CURB/WALL CONDITION, EMBEDMENT SHALL BE FROM TOP OF CURB/WALL.
2. BOLT NUT & WASHER: ANCHOR BOLTS SHALL BE EITHER L-BOLTS OR HEADED BOLTS. PROVIDE PROPER NUT & STANDARD (ANSI) 1 ¼" Ø x 0.105" THICK CUT WASHERS AT ALL BEARING, AND NON-SHEAR WALL ANCHOR BOLT LOCATIONS. PROVIDE STANDARD (ANSI) 1 ¼" Ø x 0.105" THICK CUT WASHERS AND 3" x 3" x 0.229" THICK ANGLE SLOTTED PLATE WASHER AT ALL SHEAR WALL ANCHOR BOLT LOCATIONS.
3. MINIMUM ANCHORS: MINIMUM (2) ANCHOR BOLTS PER PIECE OF SILL PLATE. ANCHOR BOLTS SHALL BE LOCATED WITHIN 7" MIN OR 12" MAX FROM THE END OF ANY SILL PLATE BREAK.
4. EDGE & END DISTANCE: ANCHOR BOLTS SHALL MAINTAIN A MINIMUM 1-3/" EDGE OF CONCRETE DISTANCE & 1" EDGE OF SILL PLATE DISTANCE. SQUARE WASHER SHALL BE MAXIMUM;3" DISTANCE FROM EDGE OF SILL PLATE ON SHEAR SIDE.
5. MASA ANCHOR ALTERNATE IS NOT ALLOWED AT DOUBLE SIDED SHEAR WALLS.

**SLAB & FOOTING SPECIFICATIONS FOR "LOW" EXPANSIVE SOILS	
"LOW - PER GEOTECHNICAL ENGINEER	
LABEL	1 STORY FOUND.
A	15", U.N.O. PER PLAN
B	12" BELOW LOWEST ADJACENT GRADE
C	4" (2X4 WALL PER PLAN) 6" (2x6 WALL PER PLAN) 8" (2x8 WALL PER PLAN)
D	(2) #5 BAR TOP & BOTTOM, U.N.O. PER PLAN
E	PER PLAN
F	15 MIL VAPOR BARRIER OVER 2" THICK, CLEAN SAND OVER 10" THICK, GRAVEL BASE

* EXPANSION CATEGORY CLASSIFICATION IS PER CBC 1803.5.3

** THE CONVENTIONAL FOUNDATION INFORMATION ABOVE IS FOR THIS SPECIFIC PROJECT ONLY WITH A "LOW" EXPANSION INDEX

SLAB & FOOTING SPECIFICATIONS 1

SCALE: N.T.S.

REFER TO DETAIL 1/SD1 FOR INFORMATION NOT PROVIDED

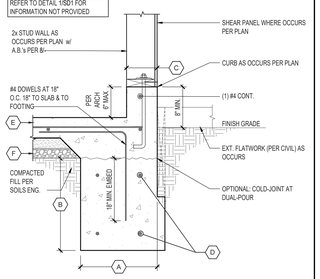

ISOLATED POST FOOTING 18

SCALE: N.T.S.

REFER TO DETAIL 1&2/SD1 FOR INFORMATION NOT PROVIDED

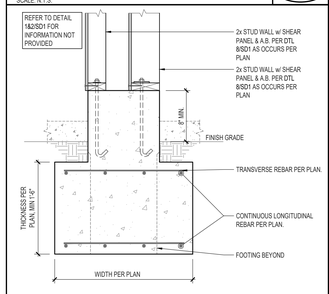

SSTB & SB HOLDOWN ROD AT INTERIOR AND EXTERIOR FOOTINGS 13

SCALE: N.T.S.

REFER TO DETAILS 1&2/SD1 FOR INFORMATION NOT PROVIDED

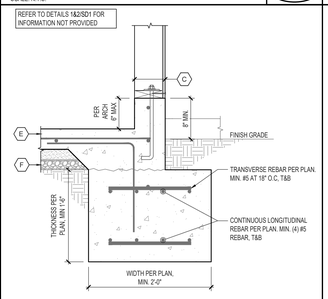

TYPICAL CONCRETE REINFORCING BAR DETAILS 9

SCALE: N.T.S.

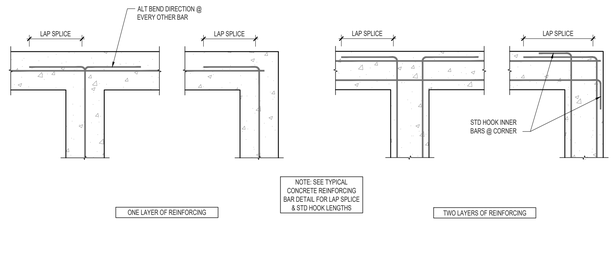

PAD FOOTING DETAIL 6

SCALE: N.T.S.

REFER TO DETAIL 1/SD1 FOR INFORMATION NOT PROVIDED

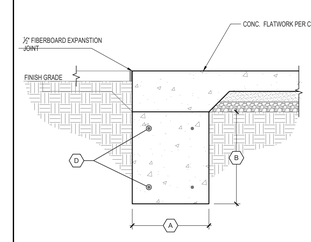

EXTERIOR BEARING OR SHEAR WALL FOOTING W/ CURB 2

SCALE: N.T.S.

REFER TO DETAIL 1/SD1 FOR INFORMATION NOT PROVIDED

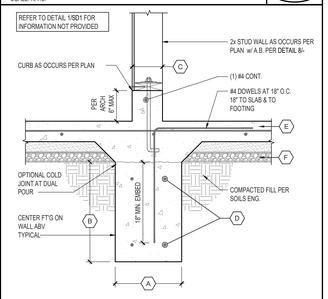

EXTERIOR FOOTING AT 24" (MAX) FRAMING POP-OUT 19

SCALE: N.T.S.

WIDENED FOOTING AT EXTERIOR WALL 14

SCALE: N.T.S.

REFER TO DETAIL 1&2/SD1 FOR INFORMATION NOT PROVIDED

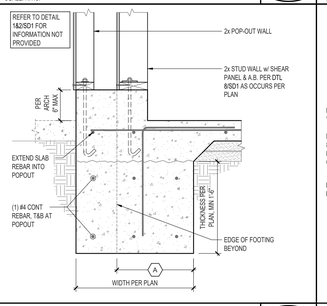

TYPICAL REINFORCING AT FOOTING INTERSECTIONS 10

SCALE: N.T.S.

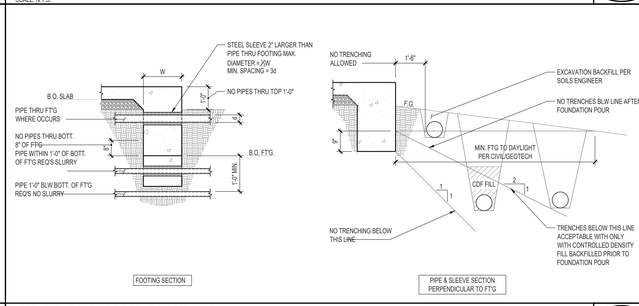

TIE BEAM FOOTING 7

SCALE: N.T.S.

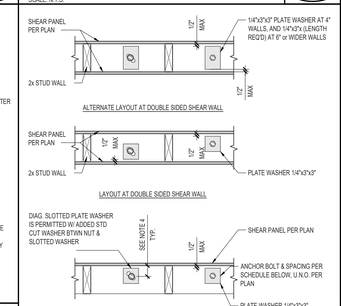

INTERIOR BEARING OR SHEAR WALL FOOTING 3

SCALE: N.T.S.

REFER TO DETAIL 1/SD1 FOR INFORMATION NOT PROVIDED

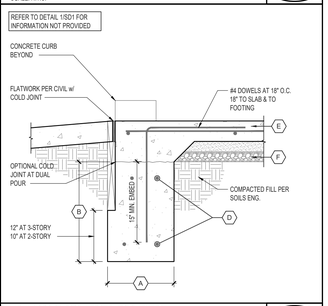

EXTERIOR FOOTING AT 24" (MAX) FRAMING POP-OUT 15

SCALE: N.T.S.

FOOTING TRENCH & PIPES THRU FOOTING 11

SCALE: N.T.S.

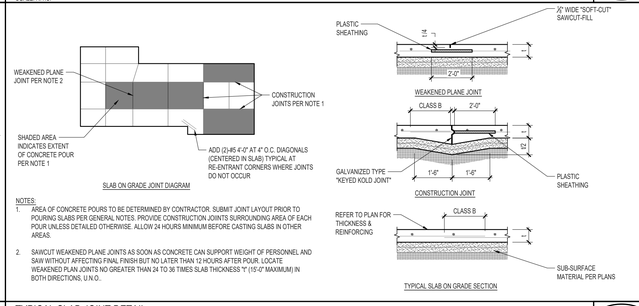

TYPICAL SILL PLATE ANCHOR BOLT SPECIFICATIONS 8

SCALE: N.T.S.

EXTERIOR FOOTING AT OPENING 4

SCALE: N.T.S.

REFER TO DETAIL 1/SD1 FOR INFORMATION NOT PROVIDED

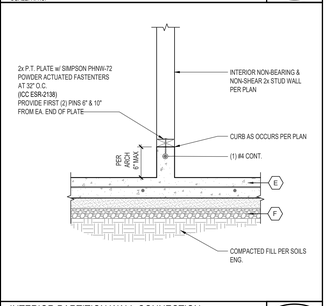

INTERIOR TIE BEAM FOOTING 16

SCALE: N.T.S.

TYPICAL SLAB JOINT DETAIL 12

SCALE: N.T.S.

TYPICAL SILL PLATE ANCHOR BOLT SPECIFICATIONS 8

SCALE: N.T.S.

INTERIOR PARTITION WALL CONNECTION 5

SCALE: N.T.S.

STK
42095 ZEVO DR., TEMECULA, CALIFORNIA 92590-3780
Phone: 951.296.9110 Fax: 951.296.6079 Email: stk@stkinc.com

CONSULTANT:

ISE
STRUCTURAL ENGINEERS
2 7 3 6 9 - V I A - I N D U S T R I A
T E M E C U L A , C A 9 2 5 9 0
T E L E : 9 5 1 . 6 0 0 . 0 3 2
W W W . I S E E N G I N E E R S . C O M
SOCAL | NORCAL | COLORADO

ISE PROJECT NO.: 24-8400.67

PROJECT MANAGER:
SANDY FONG EXT. 1016
SANDY@ISEENGINEERS.COM

PROJECT ADMINISTERED BY:
CITY OF PERRIS

101 NORTH "D" STREET
PERRIS, CA 92570

PROJECT NAME:
FIRE STATION 105 AND ADMINISTRATION BUILDING

PROJECT CIP: F077

2495 MURRIETA ROAD
PERRIS, CA 92585

ISSUE INFORMATION:

DATE:	INFORMATION:
11-26-25	95% CD SUBMITTAL
02-05-26	1 BLDG. & SAFETY 1st PLAN CHECK

SHEET INFORMATION:

STK PROJECT NO.:	365-03-25
SCALE:	AS NOTED
DATE:	FEBRUARY 2026
PLOT DATE:	–
DRAWN BY:	SF

SEAL:

REGISTERED PROFESSIONAL ENGINEER SANDY FONG No. C80965 CIVIL STATE OF CALIFORNIA

SHEET TITLE:
STRUCTURAL FOUNDATION DETAILS

SHEET NO.:
SD1

W:\8400 - STK\8400.67 - Perris Fire Station\02 - Drawings\Details.dwg
02/03/2026 4:13PM

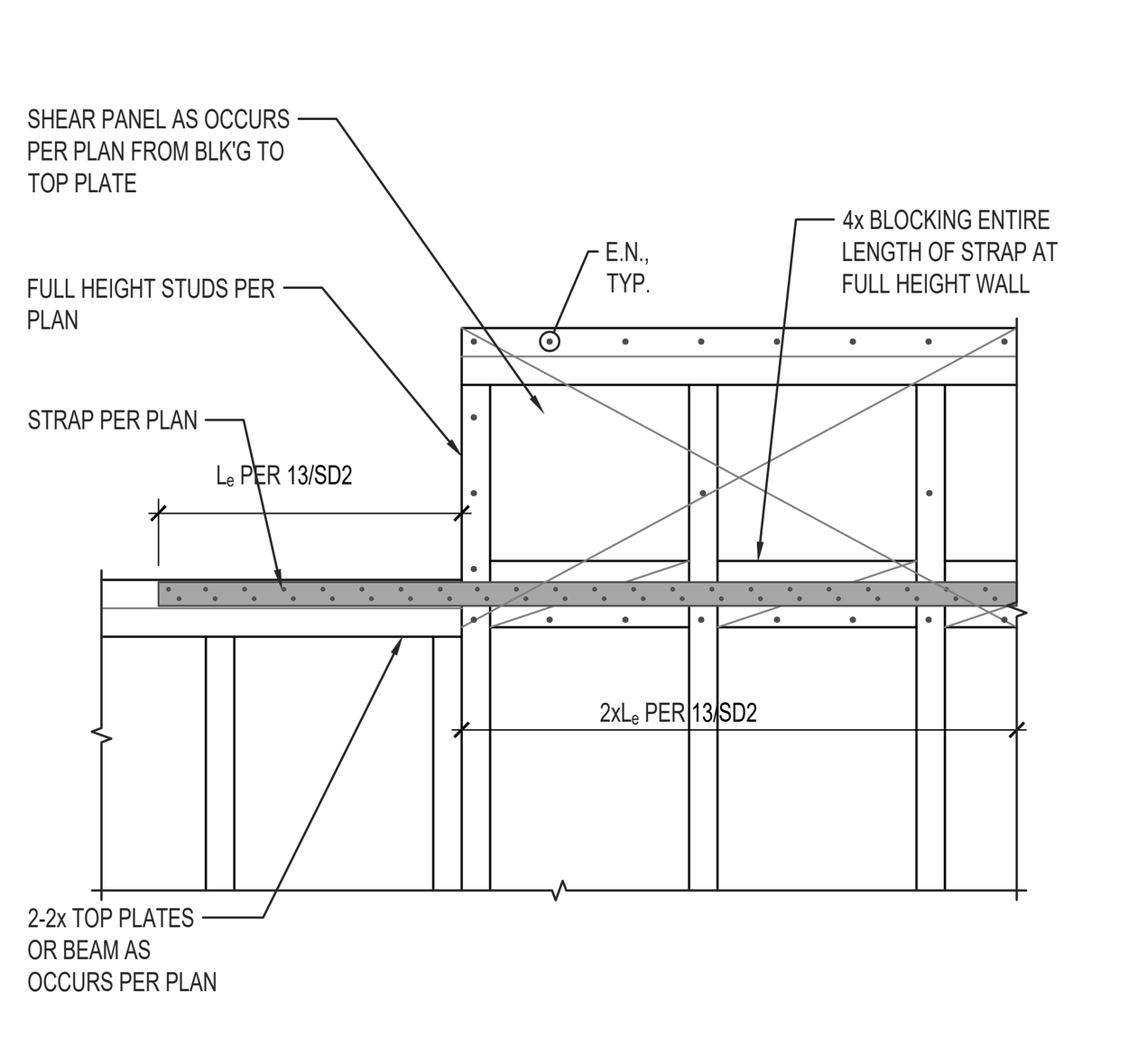

DRAG CONNECTION AT STEPPED TOP PLATES — 15
SCALE: N.T.S.

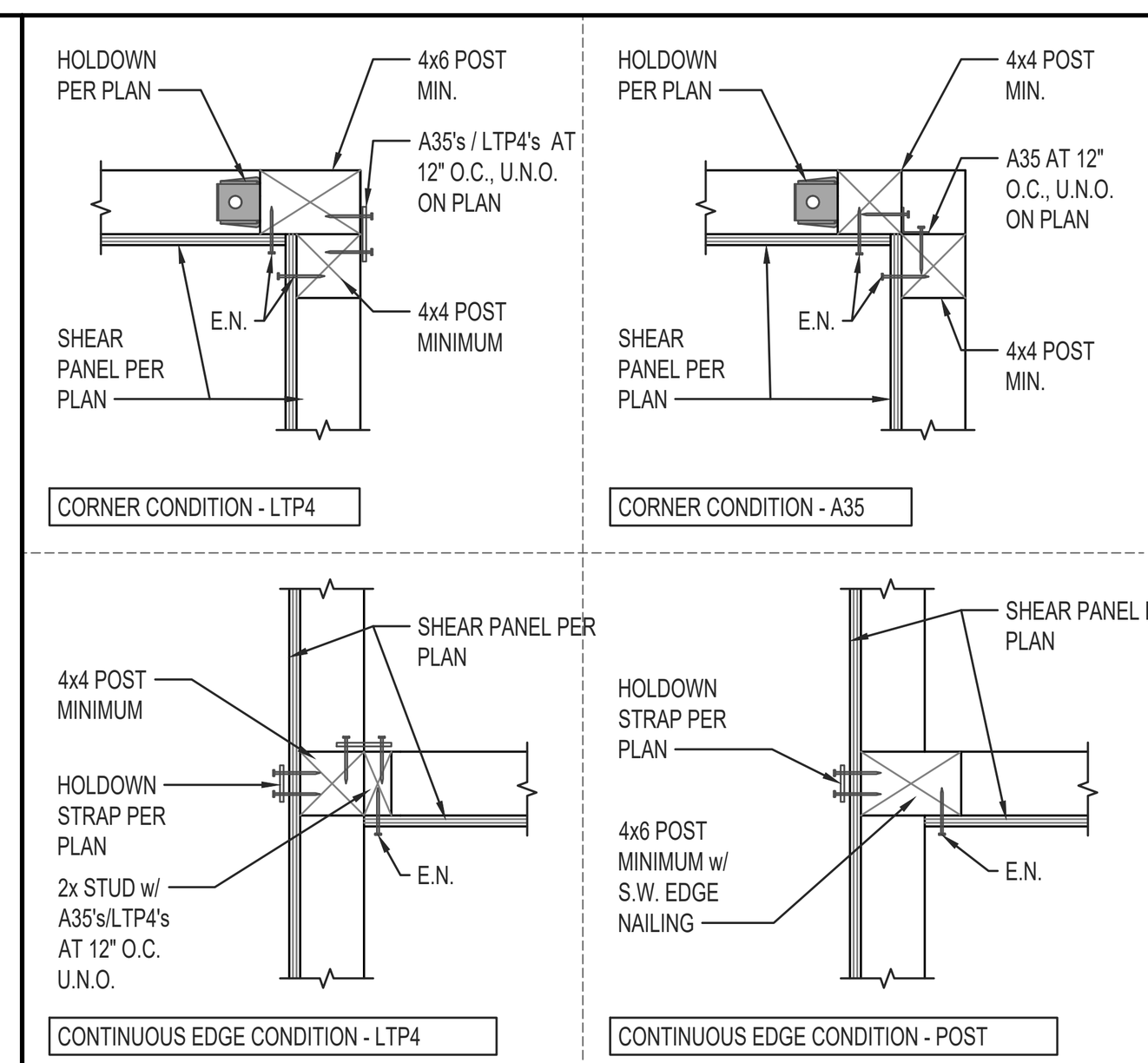

COMMON HOLDOWNS AT SHEAR WALLS — 12
SCALE: N.T.S.

TOP PLATE NOTCH - STRAP REINFORCING (DTL 4/SD2)			
DTL 4/SD2 STRAP SHOWN ON PLANS	NO. OF CTS218 (24-10dx1 ½")**	ALLOW. TENSION, LB	ALLOW. COMP., LB
CS16	2-CTS218	3632	1632
2-CS16	2-CTS218	3632	1632
CMST14	4-CTS218	7264	3792
CMST12	4-CTS218	7264	3792

**REPLACES 4/SD2 COLLECTOR STRAPS
CTS218 ICC ES-ESR 2105

STRAPS ONLY REQUIRED AT EXTERIOR WALLS AND INTERIOR BEARING AND SHEAR WALLS

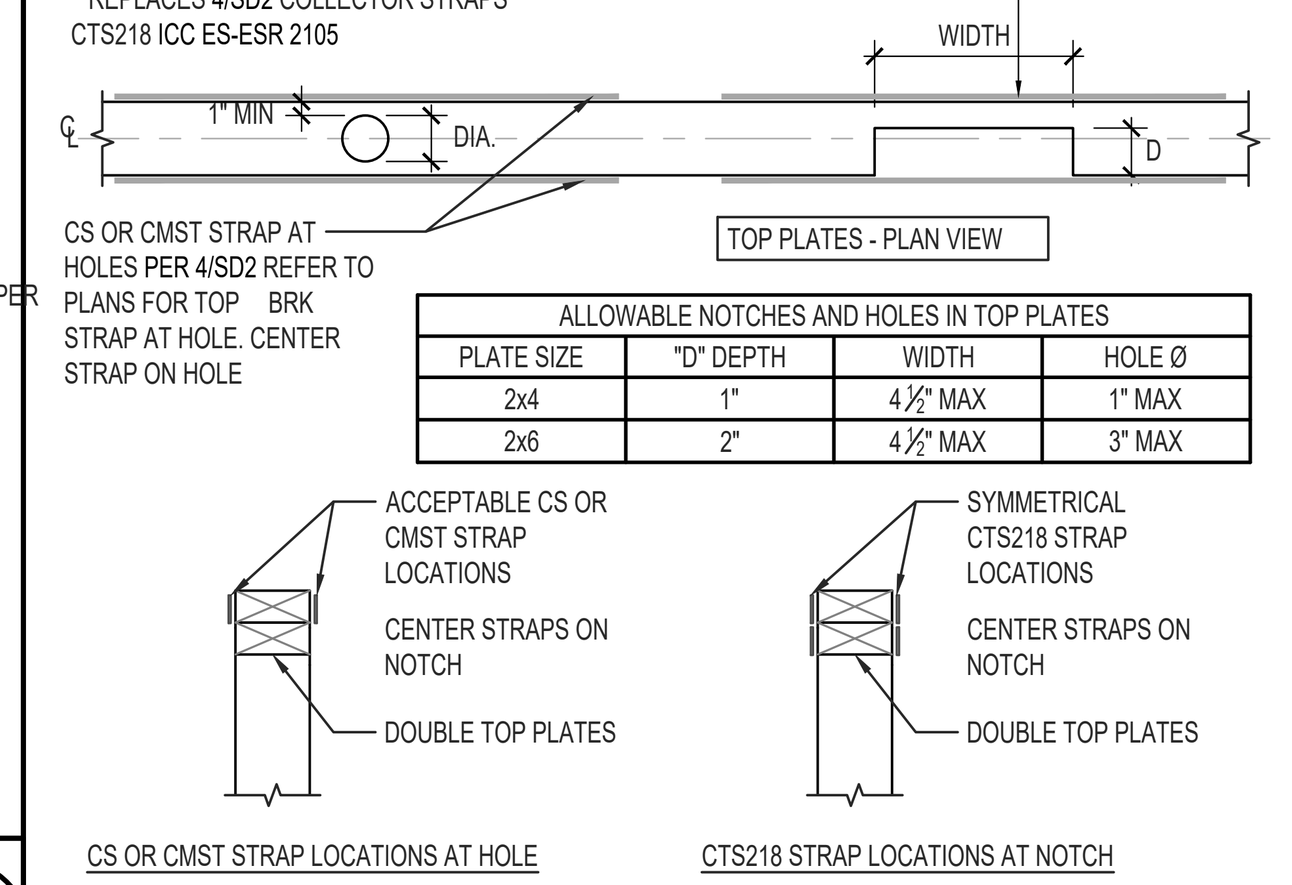

ALLOWABLE NOTCHES AND HOLES IN TOP PLATES			
PLATE SIZE	"D" DEPTH	WIDTH	HOLE Ø
2x4	1"	4 ½" MAX	1" MAX
2x6	2"	4 ½" MAX	3" MAX

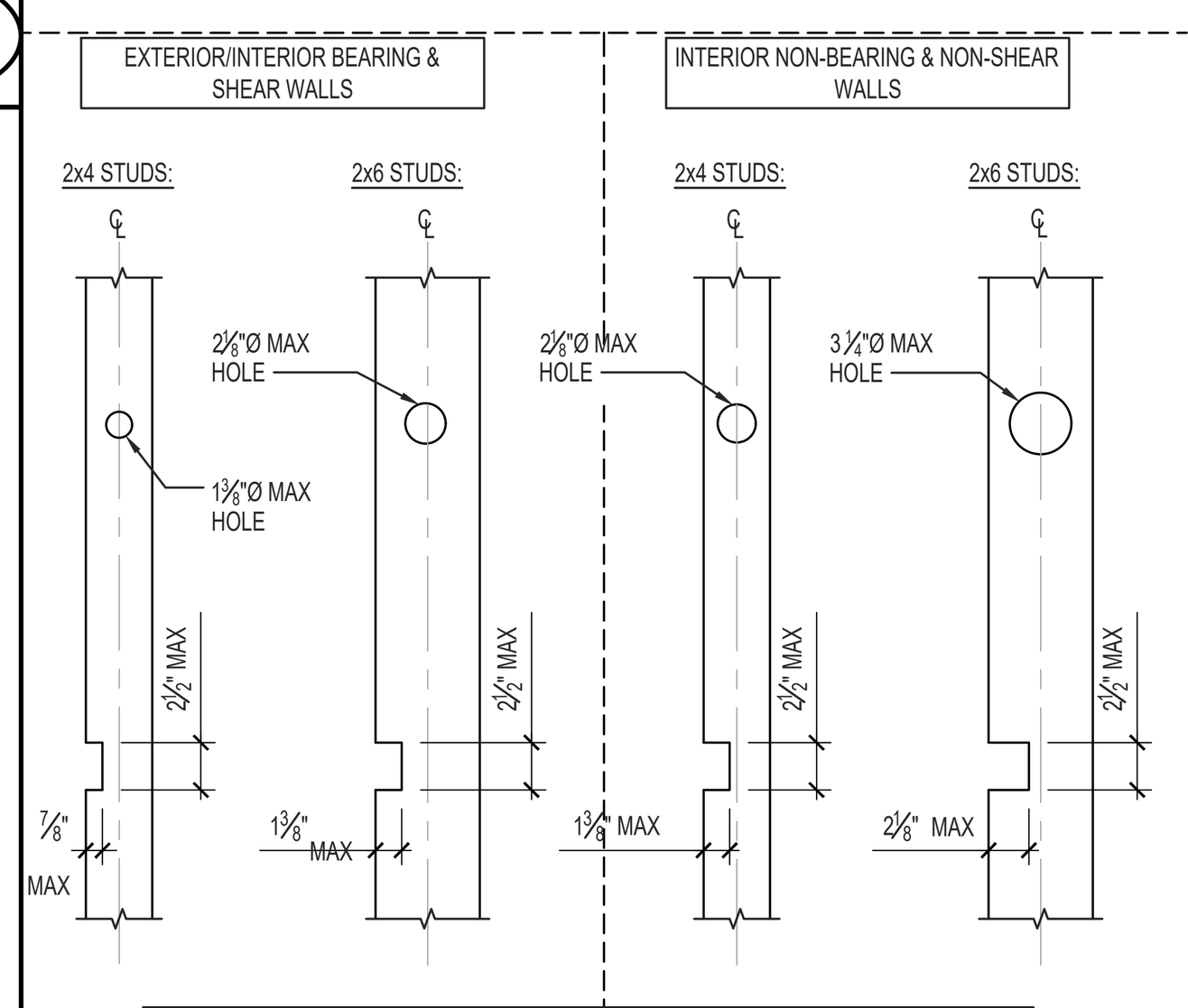

ALOWABLE HOLES/NOTCHES IN STUDS - CBC SECTIONS 2308.5.9 & 2308.5.10

NOTCHED/DRILLED STUD WALL NOTES: (CBC SECTIONS 2308.5.9 & 2308.5.10)
1. DO NOT NOTCH OR DRILL MORE THAN 3 CONSECUTIVE BEARING OR SHEAR WALL STUDS.
2. ALL HOLES SHOULD BE CENTERED ON STUDS, TYPICAL.

NOTCHING AND DRILLING OF STUDS AND TOP PLATES — 8
SCALE: N.T.S.

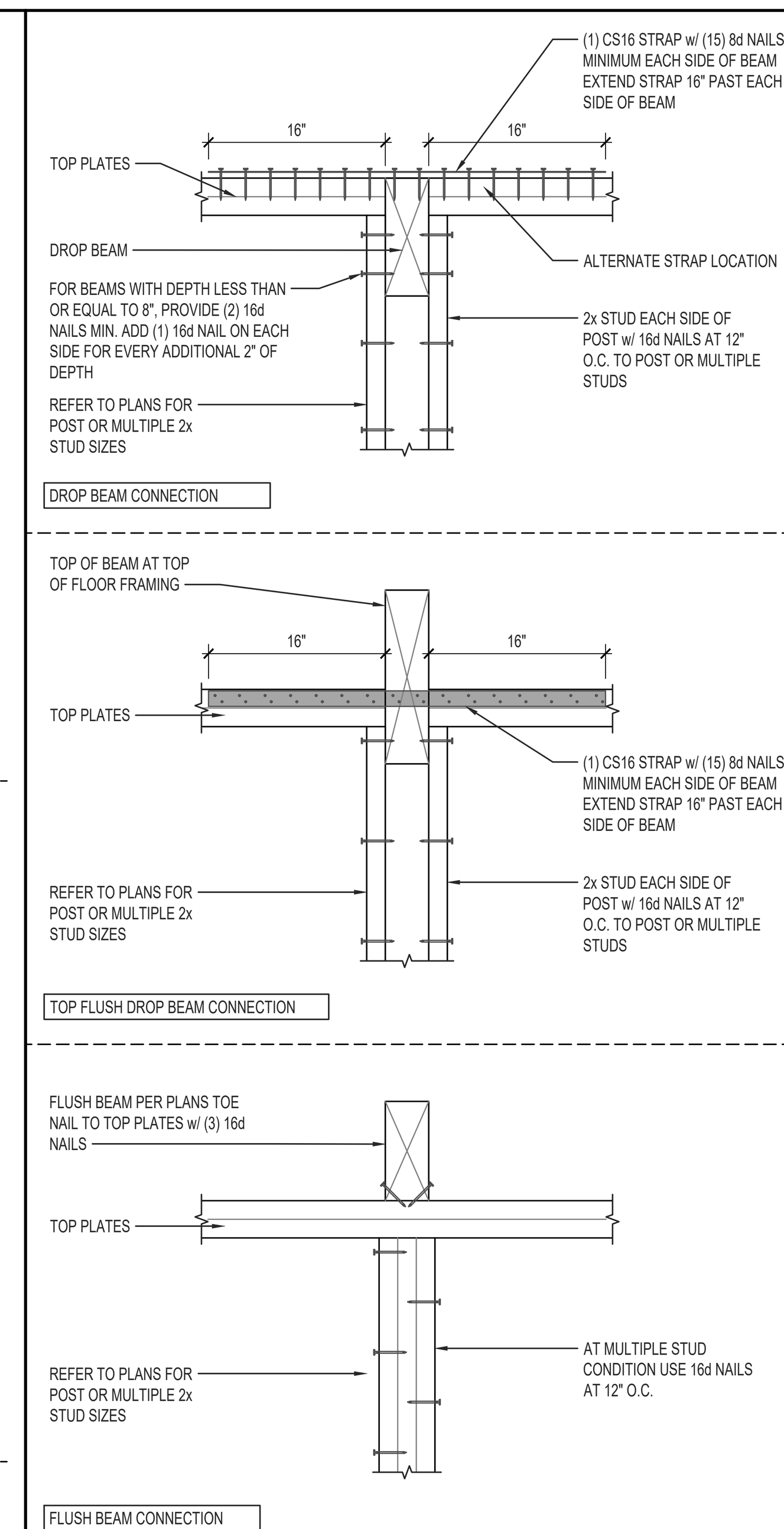

BEAM DRAG CONNECTIONS — 6
SCALE: N.T.S.

VERTICAL WOOD FRAMED SHEAR WALL SCHEDULE - 2022 CBC / AF&PA SDPWS-2021 - SEISMIC DESIGN CATEGORY D, E & F												
MARK	WOOD STRUCTURAL PANEL			PANEL NAILING			FASTENERS & HARDWARES SPACING			FRAMING MEMBER THICKNESS AT ADJOINING PANEL EDGES[7]	ASD CAPACITY (PLF) (DOUGLAS FIR)	
	THICK (IN)	GRADE RATING	SPAN RATING	NAIL SIZE	EDGE NAIL ON CENTER SPACING	FIELD NAIL ON CENTER SPACING	SHEAR WALL SILL PLATE TO RIM: ¼"Ø SDS SCREW O.C. SPACING[7]	RIM JOIST OR BLOCKING CONNECTION TO TOP PLATE BLW: LTP4 CLIP O.C. SPACING[7]	RBC CLIP O.C. SPACING		SEISMIC	WIND
6	3/8	SHEATHING	24/0	8d	6"	12"	11"	14"	12"	2x	260	365
4	3/8	SHEATHING	24/0	8d	4"	12"	6"	10"	8"	2x	350	532
3	3/8	SHEATHING	24/0	8d	3"	12"	6"	7"	6"	3x	490	685
2	3/8	SHEATHING	24/0	8d	2"	12"	4"	6"	5"	3x	640	895
2A	3/8	STRUCTURAL I	24/0	8d	2"	12"	4"	5"	4"	3x	730	1022
2B	15/32	STRUCTURAL I	32/16	10d	2"	12"	3"	4"	3"	3x	870	1217

SHEAR WALL NOTES:
1. PANEL NAILS - MAY BE EITHER COMMON OR GALVANIZED BOX. GALVANIZED NAILS ARE REQUIRED WHEN PENETRATING PRESSURE TREATED LUMBER THAT CONTAINS TREATMENTS OTHER THAN BORATE.
2. PANEL RATING - WOOD PANELS MAY CONSIST OR EITHER OSB OR 5-PLY PLYWOOD WITH A MINIMUM EXPOSURE 1 RATING.
3. STUD SPACING - 2x WOOD STUDS AT SHEAR WALL SHALL BE SPACED A MAXIMUM 16" ON CENTER.
4. PANEL BREAKS - ALL PANELS EDGES SHALL BE 2x BLOCKED IF OCCURS.
5. STAGGERED NAILS - ALL NAILING AT 3" O.C. OR CLOSER SHALL BE STAGGERED.
6. SILL PLATE ANCHOR BOLT WASHERS - SHALL BE 0.229" x 3" x 3" STEEL PLATE WASHERS WITH A DIAGONALLY SLOTTED HOLE NO LARGER THAN 3/16" GREATER THAN THE BOLT DIAMETER OR 1 ¾" MAXIMUM. THE WASHER SHALL BE PLACED BETWEEN THE NUT AND SILL PLATE AND SHALL NOT BE OFFSET BY MORE THAN ½" OF THE EDGE OF THE SILL PLATE ON THE SIDE WITH SHEATHING ATTACHMENT.
7. DOUBLE SIDED SHEAR WALLS - MEMBERS SHALL BE 3x AT ALL ADJOINING PANEL EDGES AND NAILS SHALL BE STAGGERED ON EACH SIDE OF THE PANEL BREAK ON EACH SIDE OF THE ADJOINING MEMBER. SILL PLATE SHALL BE MIN 3x FOR FASTERNER SPACING 3" OR LESS. PROVIDE TWO ROWS OF FASTENERS AT 3-1/2" RIM/BLK. WHERE HARDWARE IS REQ. PROVIDE HARDWARE SPACING EA. SIDE OF WALL

SHEAR WALL SCHEDULE — 1
SCALE: N.T.S.

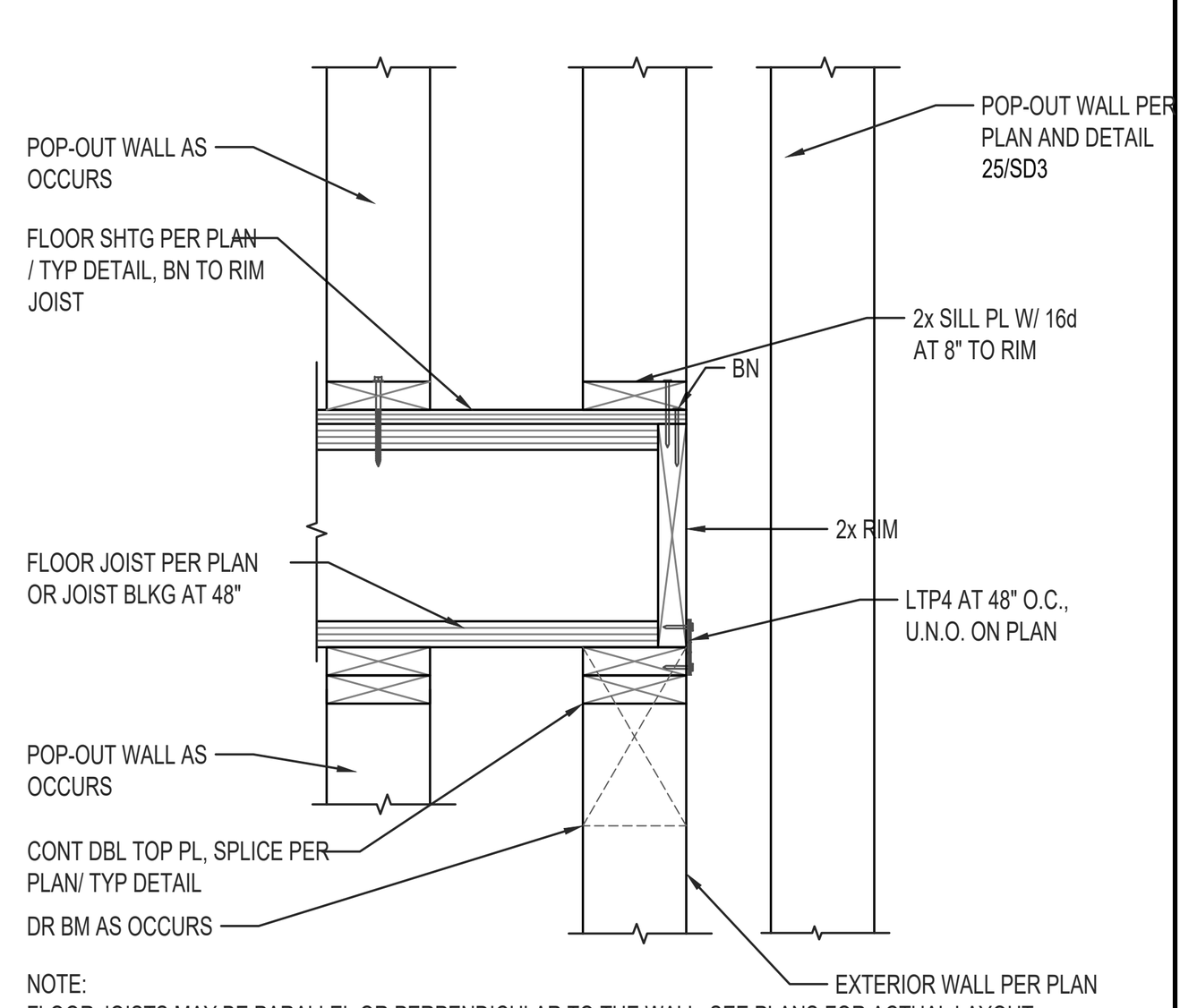

NOTE:
FLOOR JOISTS MAY BE PARALLEL OR PERPENDICULAR TO THE WALL. SEE PLANS FOR ACTUAL LAYOUT.

FLOOR FRAMING TO EXTERIOR WALL - NON-SHEAR WALL CONDITION — 16
SCALE: N.T.S.

TYPICAL STRAP SCHEDULE				
STRAP	MIN. MEMBER WIDTH	MIN. NAILING AT EA. END OF STRAP	MIN. END LENGTH (Le) SEE NOTE BLW.	DRAG CAPACITY (LBS)
CS20	1 ¼"	(7) 8d or 0.131"x 2 ½"	9"	1,030
CS16	1 ¼"	(11) 8d or 0.131"x 2 ½"	13"	1,705
CS14	1 ¼"	(15) 8d or 0.131"x 2 ½"	16"	2,490
CMSTC16	(2) 2x or 3 ½"	(25) 10d or 0.148"x 2 ½"	20"	4,690
CMST14	3 ½"	(33) 10d or 0.148"x 2 ½"	30"	6,475
CMST12	3 ½"	(43) 10d or 0.148"x 2 ½"	39"	9,215

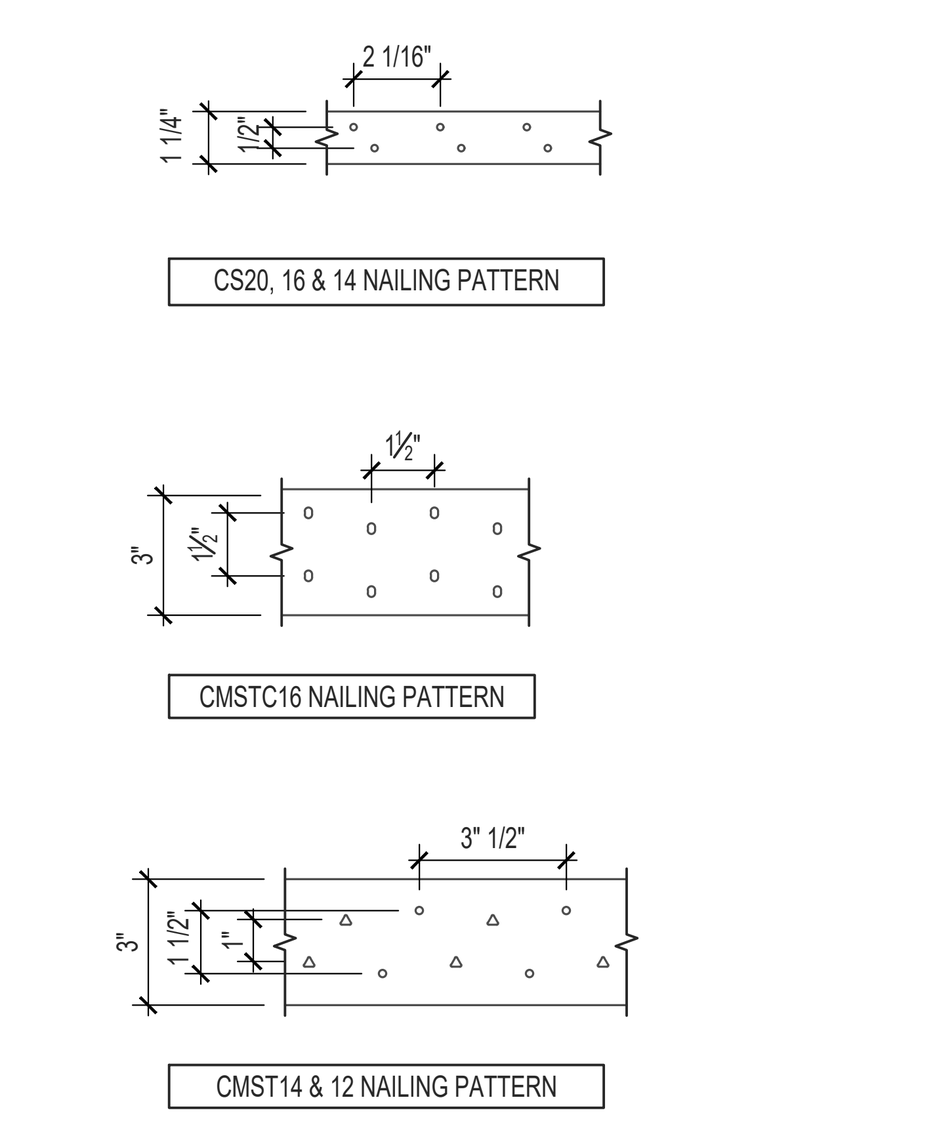

NOTE: WHERE STRAP IS ATTACHED TO THE TOP OR BOTTOM FACE (I.E. NAILING INTO THE GRAINS) OF ENGINEERED LUMBER (LSL, LVL & PSL) OR IF THE NAILING TENDS TO SPLIT THE WOOD, THE MINIMUM END LENGTH SHALL BE DOUBLED AND NAILING PROVIDED AS FOLLOWS:
- CS20, 16 & 14 STRAPS - FILL EVERY OTHER NAIL HOLE (4⅛" NAIL SPACING)
- CMSTC16 STRAP - FILL EVERY OTHER NAIL HOLE (3" NAIL SPACING)
- CS16 & 14 STRAPS - FILL ONLY ROUND NAIL HOLES (3½" NAIL SPACING)

TYPICAL STRAP REQUIREMENTS — 13
SCALE: N.T.S.

JOIST SIZE	MAX. NOTCH WIDTH: D/3	MAX. NOTCH DEPTH: D/6	MAX HOLE SIZE: D/3
2x6	1⅞"	⅞"	1⅞"
2x8	2⅜"	1⅛"	2⅜"
2x10	3"	1½"	3"
2x12	3⅝"	1⅞"	3⅝"
2x14	4⅜"	2⅛"	4⅜"

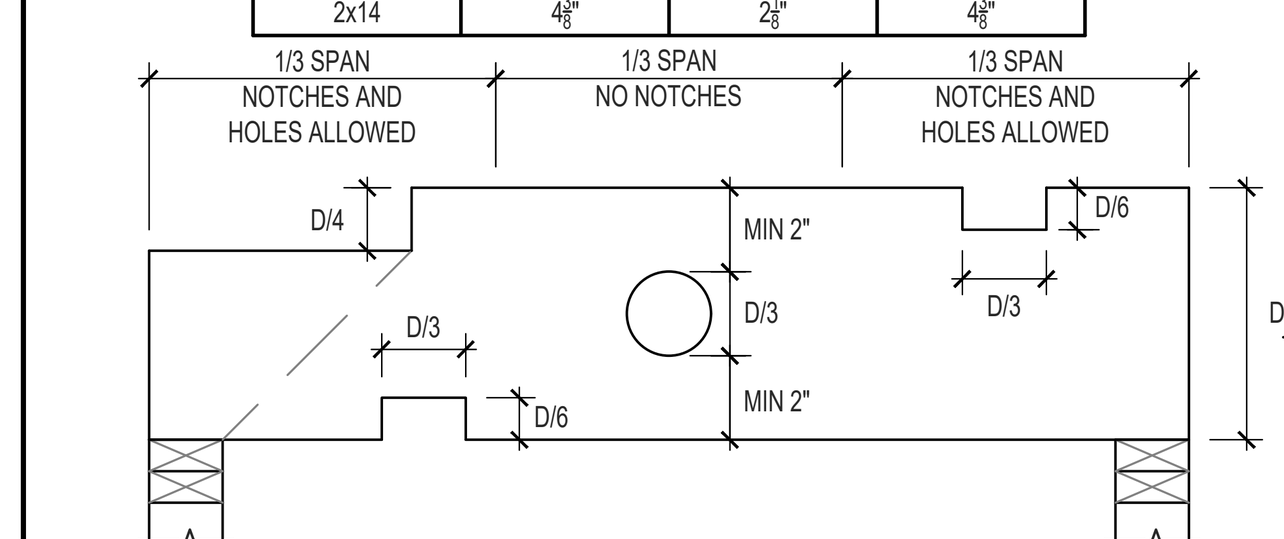

NOTES:
1. HOLES MAY BE DRILLED IN ANY 1/3 SPAN. HOLES MUST BE A MIN 12" FROM ANY NOTCH.
2. DO NOT NOTCH BOTH TOP AND BOTTOM SURFACES WITHIN THE SAME 1/3 SPAN.
3. MAX ALLOWED IS A COMBINATION OF TWO NOTCHES AND/OR HOLES PER 1/3 SPAN.
4. THIS DETAIL DOES NOT APPLY TO NOTCHES AND HOLES IN STRUCTURAL BEAMS, THEY MUST BE SPECIFICALLY DETAILED.
5. NOTCHES AND HOLES ARE NOT ALLOWED IN CANTILEVERED JOISTS.
6. REFERT TO MANUFACTURER'S RECOMMENDATIONS FOR HOLES IN MANUFACTURED I-JOISTS. DO NOT NOTCH I-JOISTS.

NOTCHED OR DRILLED SOLID JOISTS — 9
SCALE: N.T.S.

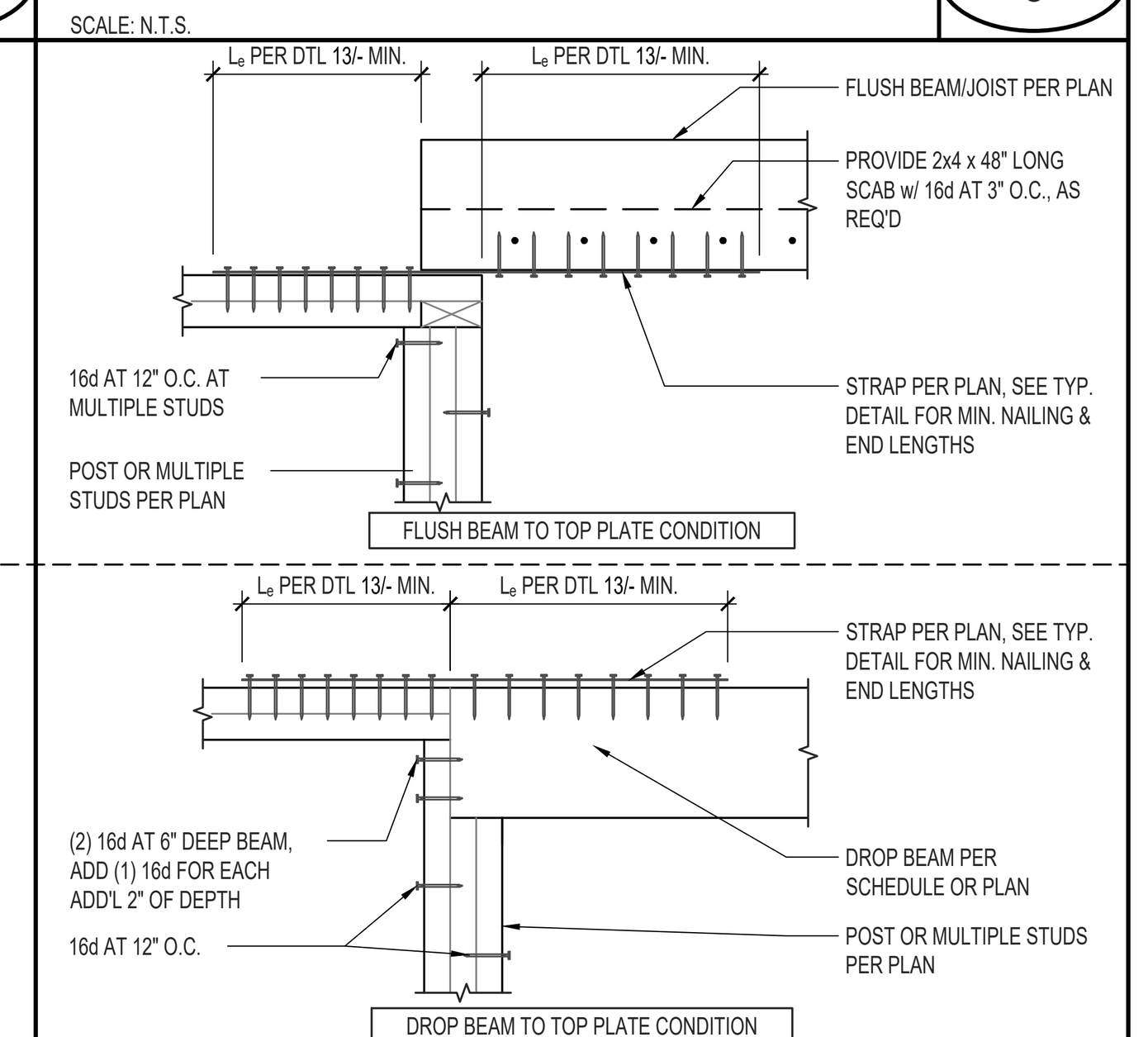

TYPICAL BEAM TO TOP PLATE DRAG CONNECTION — 7
SCALE: N.T.S.

TOP PLATE SPLICE SCHEDULE							
PLATE SPLICE MARK	FASTENER TYPE & QUANTITY	ALT. PLATE STRAP	CAPACITY (lb) C_D = 1.6	PLATE SPLICE MARK	FASTENER TYPE & QUANTITY	ALT. PLATE STRAP	CAPACITY (lb) C_D = 1.6
A	(8) 16d	CS16	1,670	F	(9) ¼"x3" SDS	CMSTC16	4,030
B	(10) 16d	CS14	2,090	G	(12) ¼"x3" SDS	CMST14	5,380
C	(12) 16d	2-CS16	2,510	H	(24) ¼"x3" SDS	2-CMST14	10,760
D	(14) 16d	2-CS16	2,930	J	(17) ¼"x3" SDS	CMST12	7,620
E	(16) 16d	2-CS16	3,340	K	(34) ¼"x3" SDS	2-CMST12	15,240

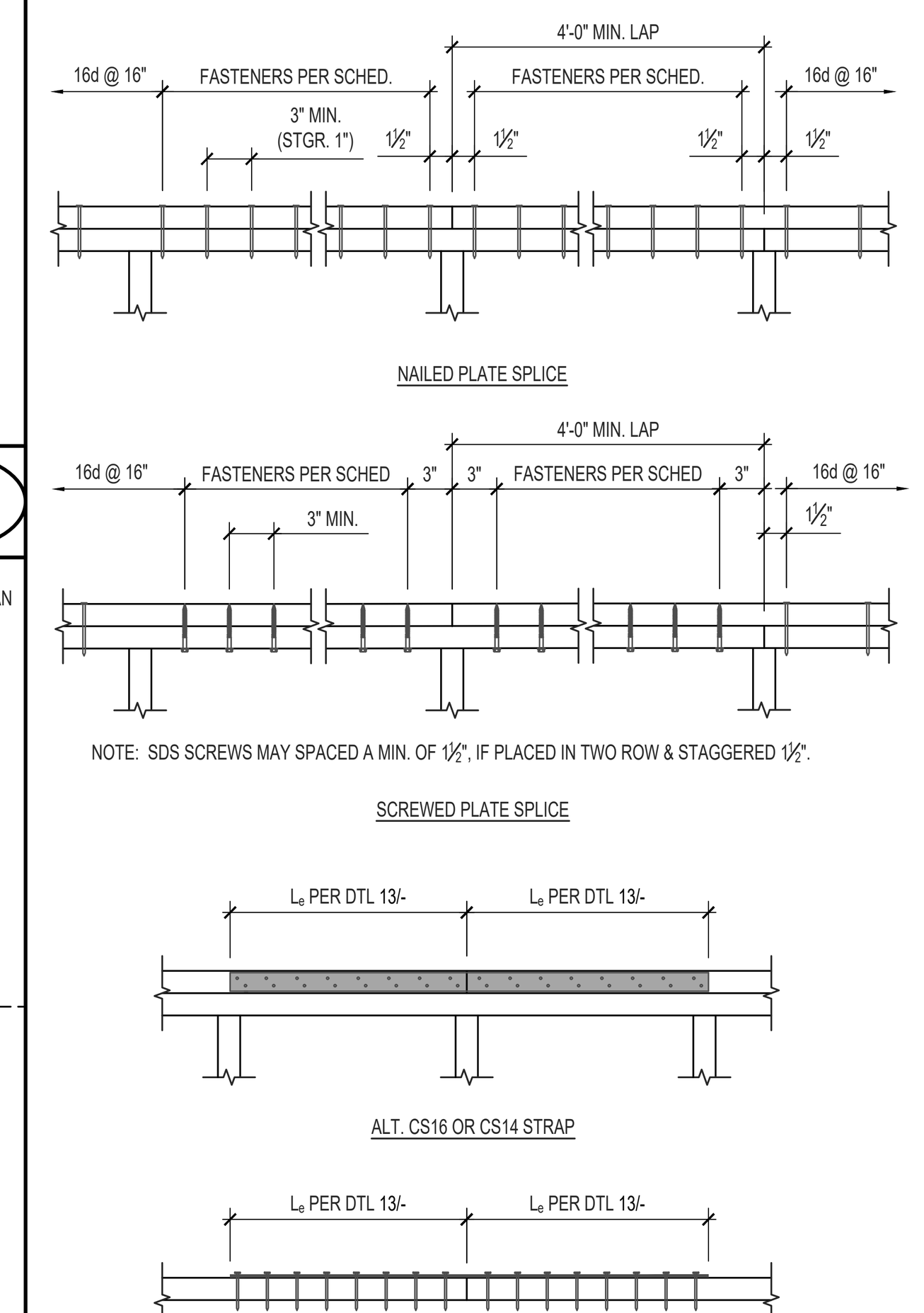

TYPICAL TOP PLATE SPLICE — 4
SCALE: N.T.S.

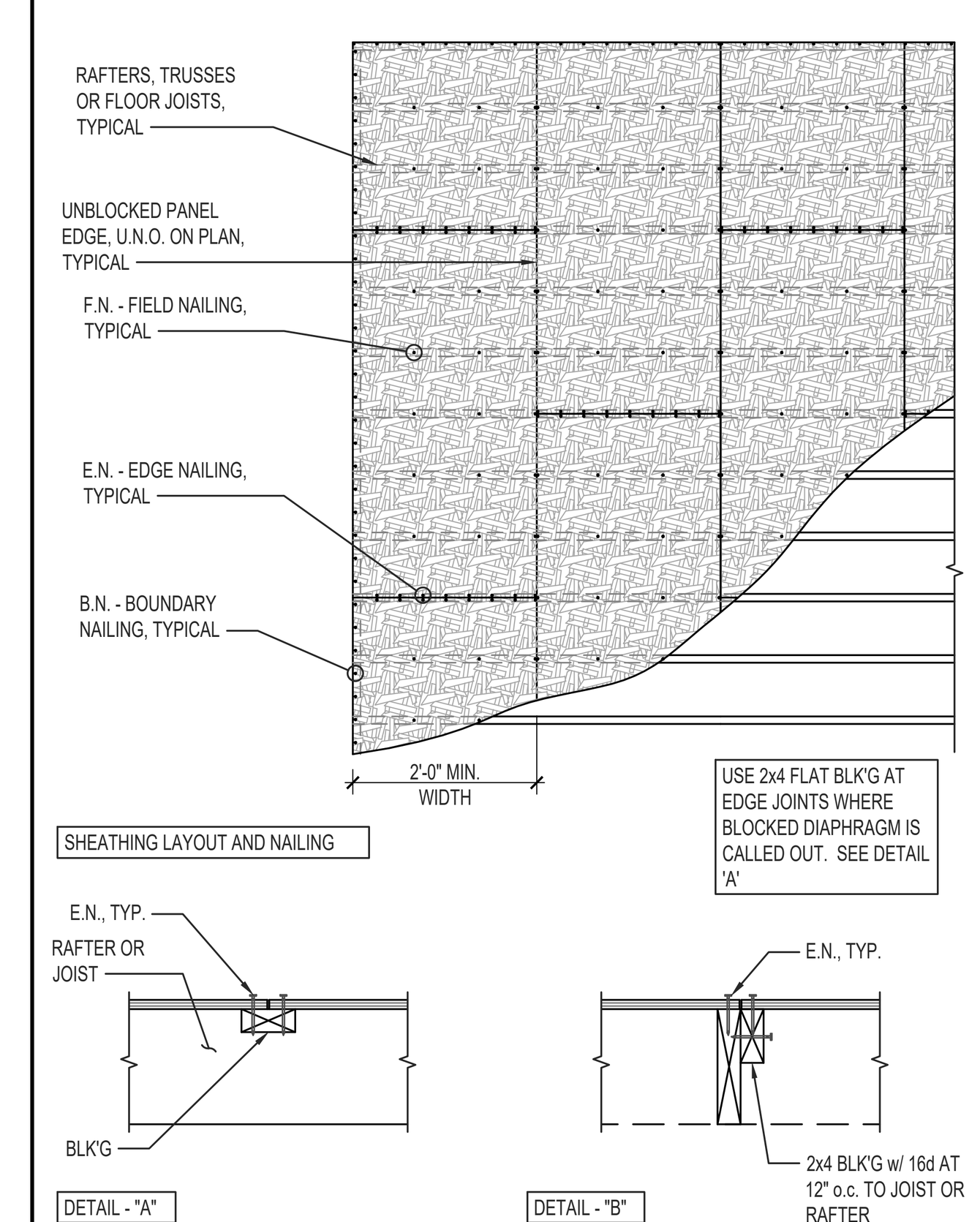

NOTES:
1. RUN LONG DIMENSION OF SHEATHING ACROSS (PERPENDICULAR TO) JOIST AND RAFTERS. PANELS SHALL BE SPACED ⅛" FOR THERMAL EXPANSION.
2. STAGGER END JOINTS 2'-0" MINIMUM.
3. BOUNDARY NAILING APPLIES TO PERIMETER PLATE LINES, CHORDS, TIES, AND AS CALLED FOR ON DRAWINGS.
4. SEE PLANS FOR NAILING AT BLOCKED DIAPHRAGMS.
5. NAILS SHALL HAVE ⅜" MIN. EDGE DISTANCE.
6. ALL JOISTS AND RAFTERS SHALL BE LAID OUT IN 4'-0" MODULE TO COINCIDE WITH THE SHEATHING.
7. USE TONGUE-AND-GROOVE SHEATHING AT FLOORS, UNLESS NOTED OTHERWISE.
8. SEE DETAIL 'B' FOR FRAMING WHERE SHEATHING JOINTS ARE OFFSET DUE TO RAFTER OR JOIST LAP SPLICES.
9. PROVIDE A ⅛" GAP BETWEEN ALL PANEL EDGES TYPICAL.

HORIZONTAL DIAPHRAGM LAYOUT AND NAILING SCHEDULE — 2
SCALE: N.T.S.

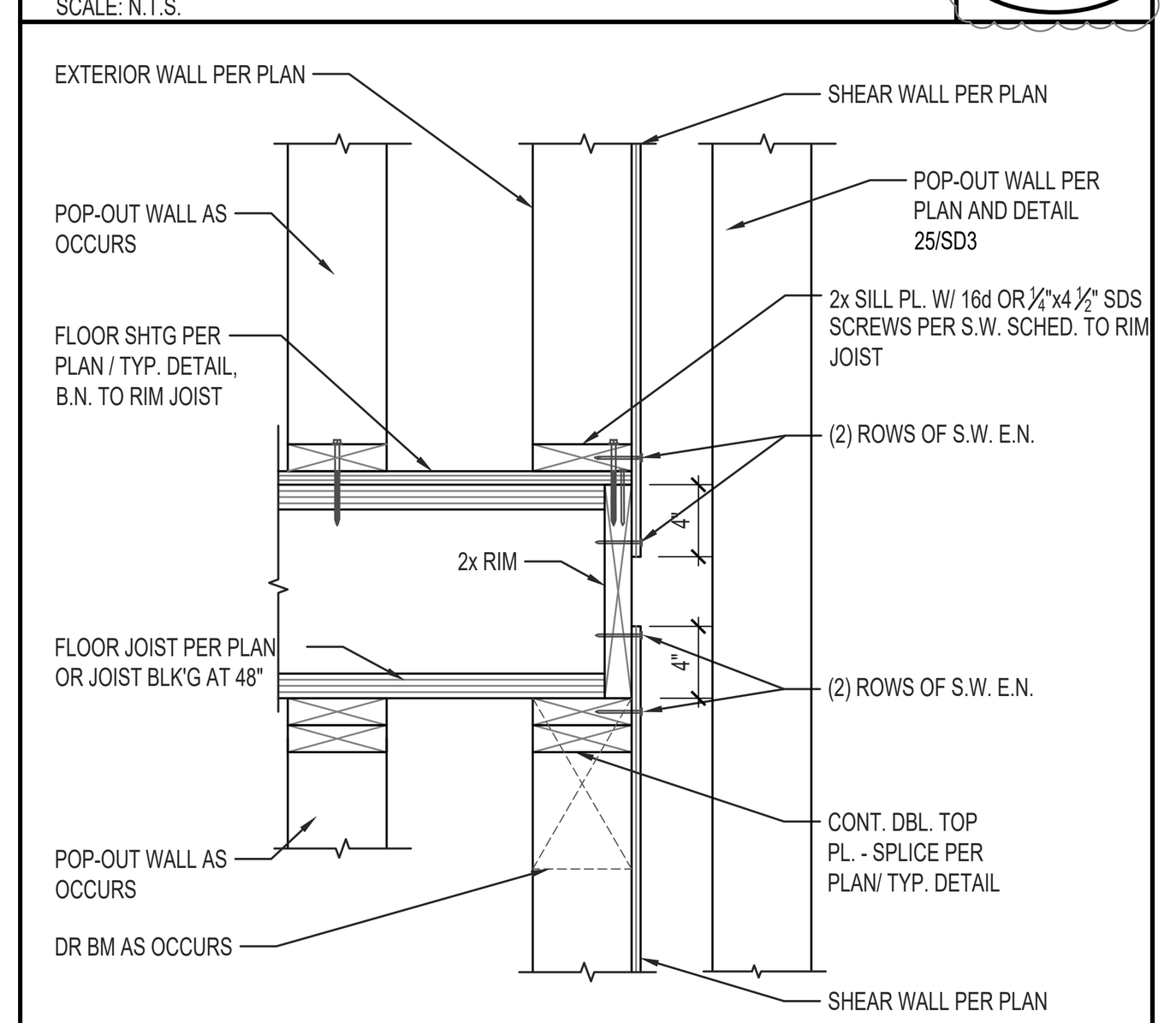

FLOOR FRAMING TO EXTERIOR WALL - SHEAR WALL CONDITION — 17
SCALE: N.T.S.

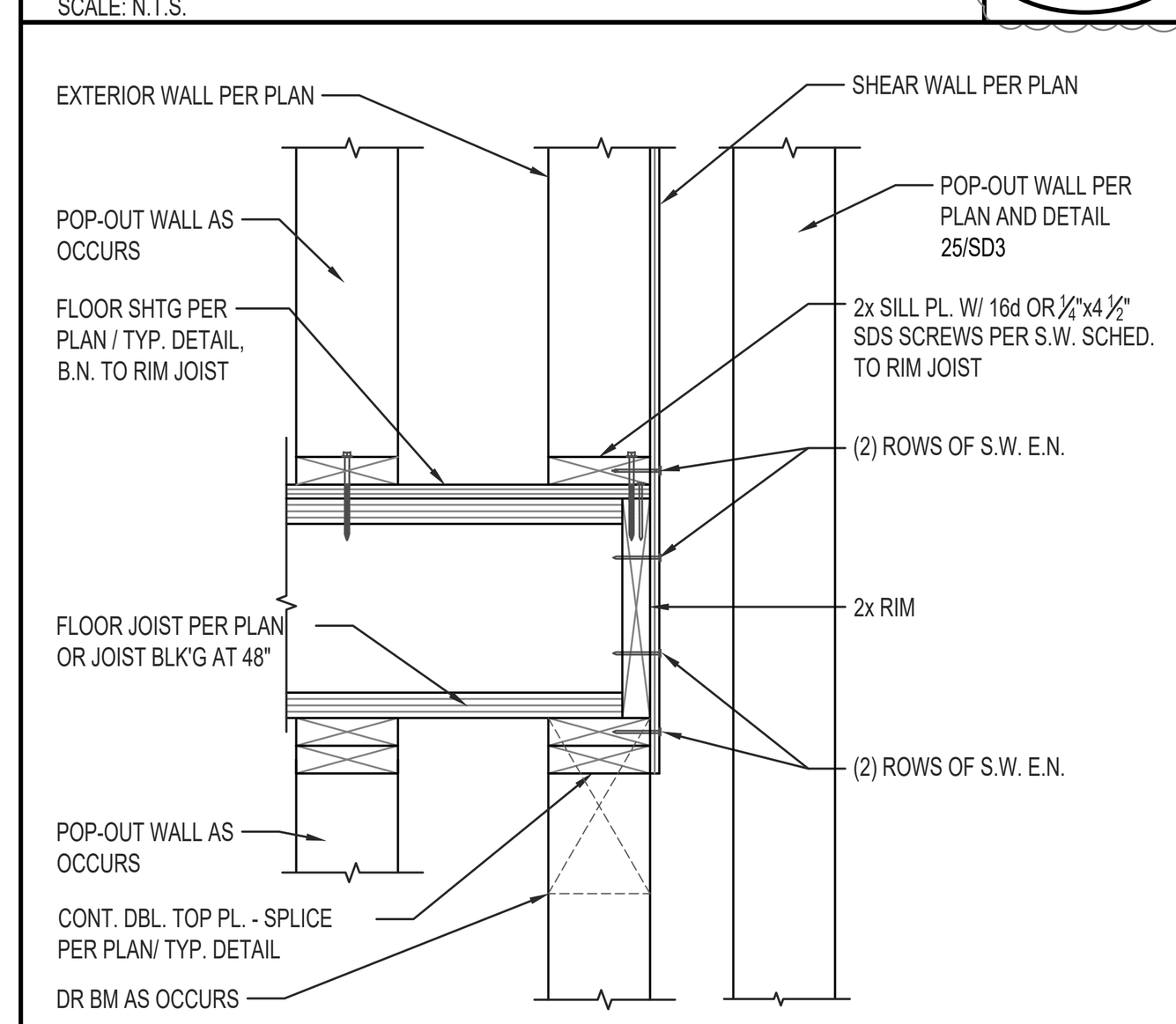

FLOOR FRAMING TO EXTERIOR WALL - SHEAR WALL ABOVE CONDITION — 18
SCALE: N.T.S.

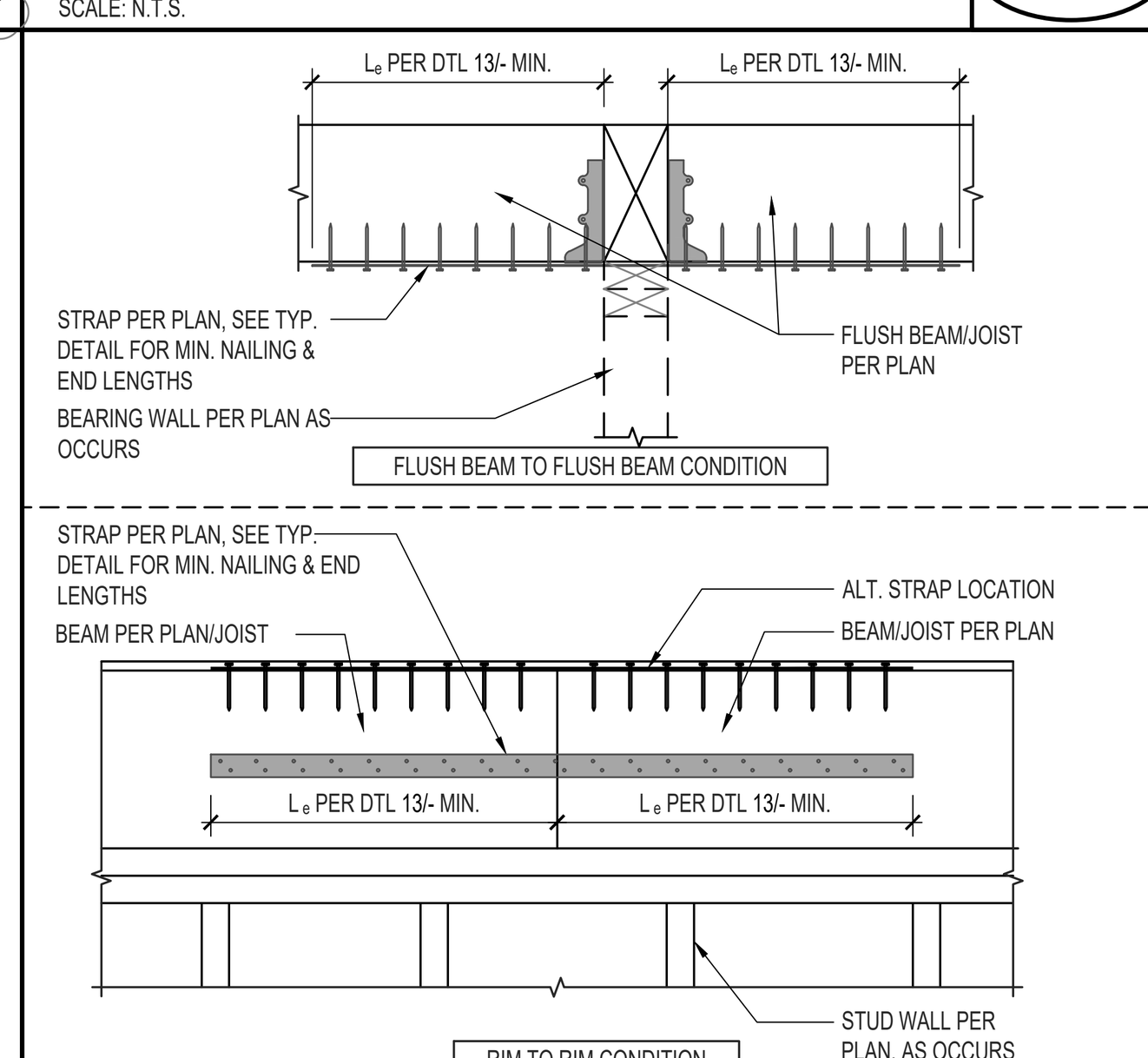

TYPICAL BEAM TO BEAM DRAG CONNECTION — 14
SCALE: N.T.S.

NON-BEARING HEADER SCHEDULE		
HEADER SIZE	MAXIMUM SPAN (5'-0" WALL ABOVE)	MAXIMUM SPAN (10'-0" WALL ABOVE)
2x4 FLAT	3'-0"	--
4x4 STD & BTR	6'-6"	4'-6"
4x6 DF NO. 2	10'-0"	9'-6"
4x8 DF NO. 2	12'-0"	12'-0"

NON-BEARING HEADER SCHEDULE — 10
SCALE: N.T.S.

KING STUD / POST REQUIREMENTS				
WALL WIDTH	*WIDTH OF WDW/DOOR	# KING STUDS	ALT: POST	***NAILS (PLATE TO KING STUD/POST)
3½"	0'-7'	(1) 2x4	--	(3)-16d (20d AT 3x SILL)
	7'-14'	(2) 2x4	4x4	(6)-16d (20d AT 3x SILL)
	14'-18'	(3) 2x4	4x6	(9)-16d (20d AT 3x SILL)
5½"	0'-9'	(1) 2x6	--	(4)-16d (20d AT 3x SILL)
	9'-17'	(2) 2x6	4x6	(8)-16d (20d AT 3x SILL)

* WIDTH IS THE DISTANCE BTW KING STUDS AT EACH SIDE OF WINDOW/DOOR.
** (1) 2x KING STUD REQ'D WHEN FULL HEIGHT HARDY/SIMPSON PANEL IS ADJACENT TO WDW/DOOR, SCREW STUD TO HARDY.
*** NAILS SHOULD BE SPREAD EVENLY TO ALL STUDS OR ALL INTO POST, AT POST CONDITION

WOOD STUD SIZE TABLE		
WALL WIDTH	WALL HEIGHT	STUD SIZE AND SPACING
3.5"	< 10'	2x4 AT 16" O.C.
	< 20'	NOT APPLICABLE
5.5"	< 10'	2x6 AT 16" O.C.
	< 20'	2x6 AT 16" O.C.

1. INTERIOR NON-BEARING WALLS MAY USE A STUD SPACING OF 24" ON CENTER.
2. THIS TABLE APPLIES TO STUD WALLS SUPPORTING A MAXIMUM OF (1) FLOOR AND (1) ROOF. THE PLANS SHOULD BE CONSULTED FOR ALTERNATE CONDITIONS.

ALLOWABLE SHEAR WALL PENETRATIONS
1. HOLES UP TO 5" SQ. DO NOT REQUIRE BLK'G & E.N.
2. HOLES FROM 5" SQ. TO 16" SQ. REQUIRE BLK'G & E.N.
3. HOLES LARGER THAN 16" SQ. ARE NOT ALLOWED.
4. HOLE SIZE INCLUDES THE LENGTH OF THE OVERCUT.
5. MAX. ACCUMULATED LENGTH OF OPENINGS SHALL NOT EXCEED 20 PERCENT OF THE WALL LENGTH.
6. OPENING MUST BE A MIN. 12" FROM SILL PLATE, TOP PLATES & END POSTS.
7. RECOMMEND CIRCULAR BORED HOLES OR RADIUS CORNER CUTS.
8. END POSTS SHOULD NOT BE CUT FOR ANY REASON, STUDS & TOP PLATE MAY BE NOTCHED PER DET 8/-.

ALL TYPICAL FRAMING SHALL CONFORM TO THE CONVENTIONAL REQUIREMENTS OF THE GOVERNING BUILDING CODE

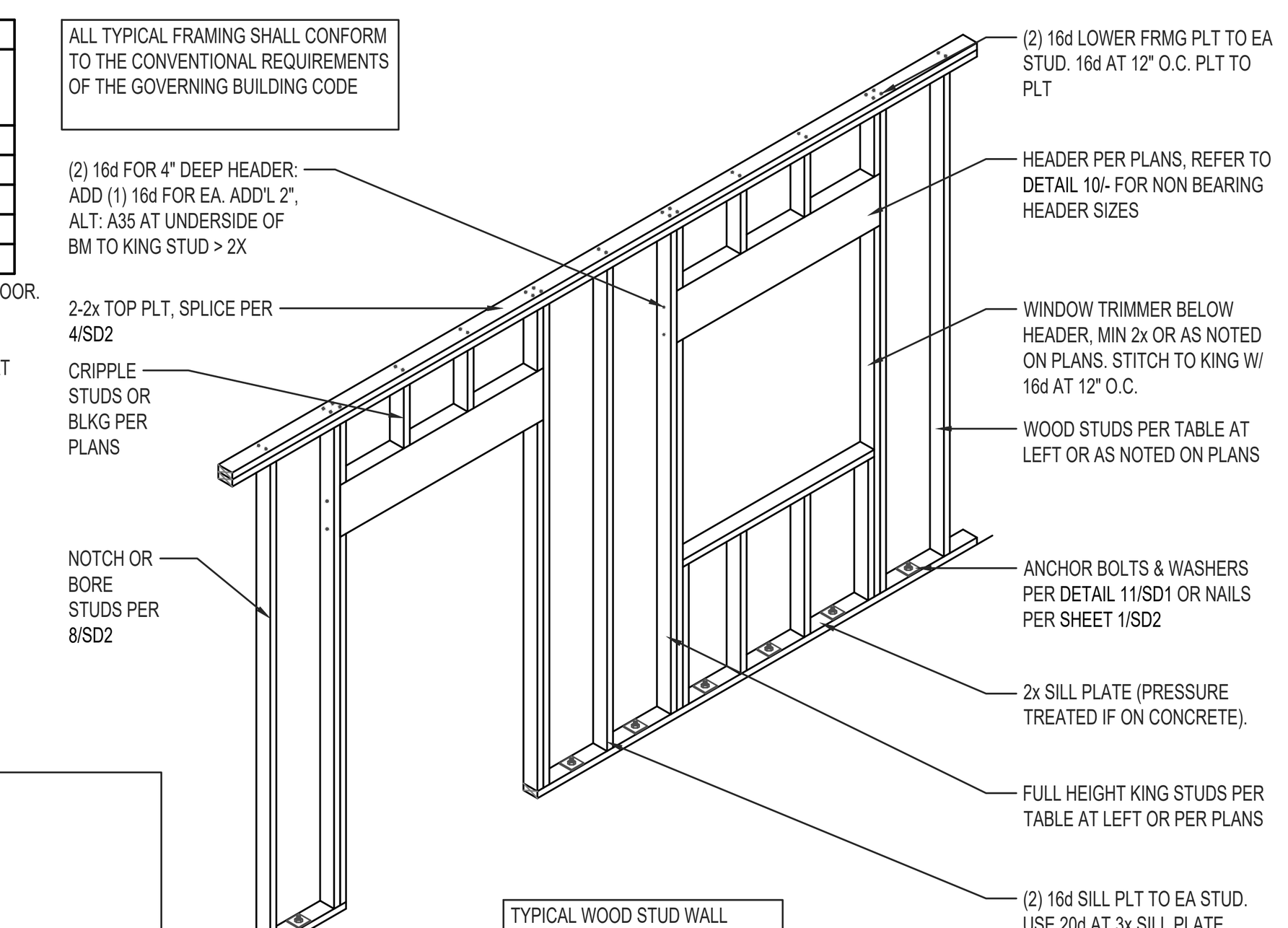

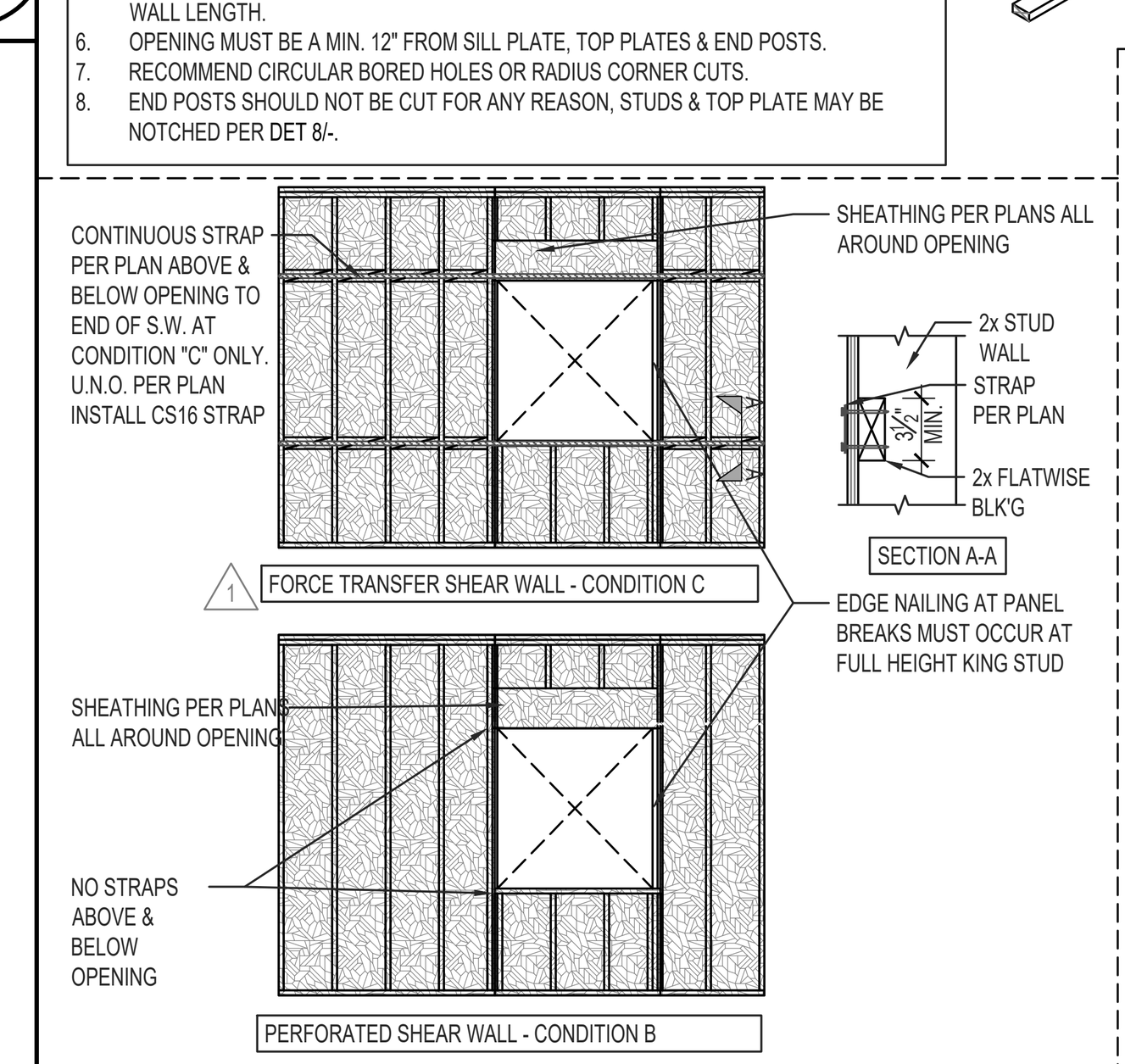

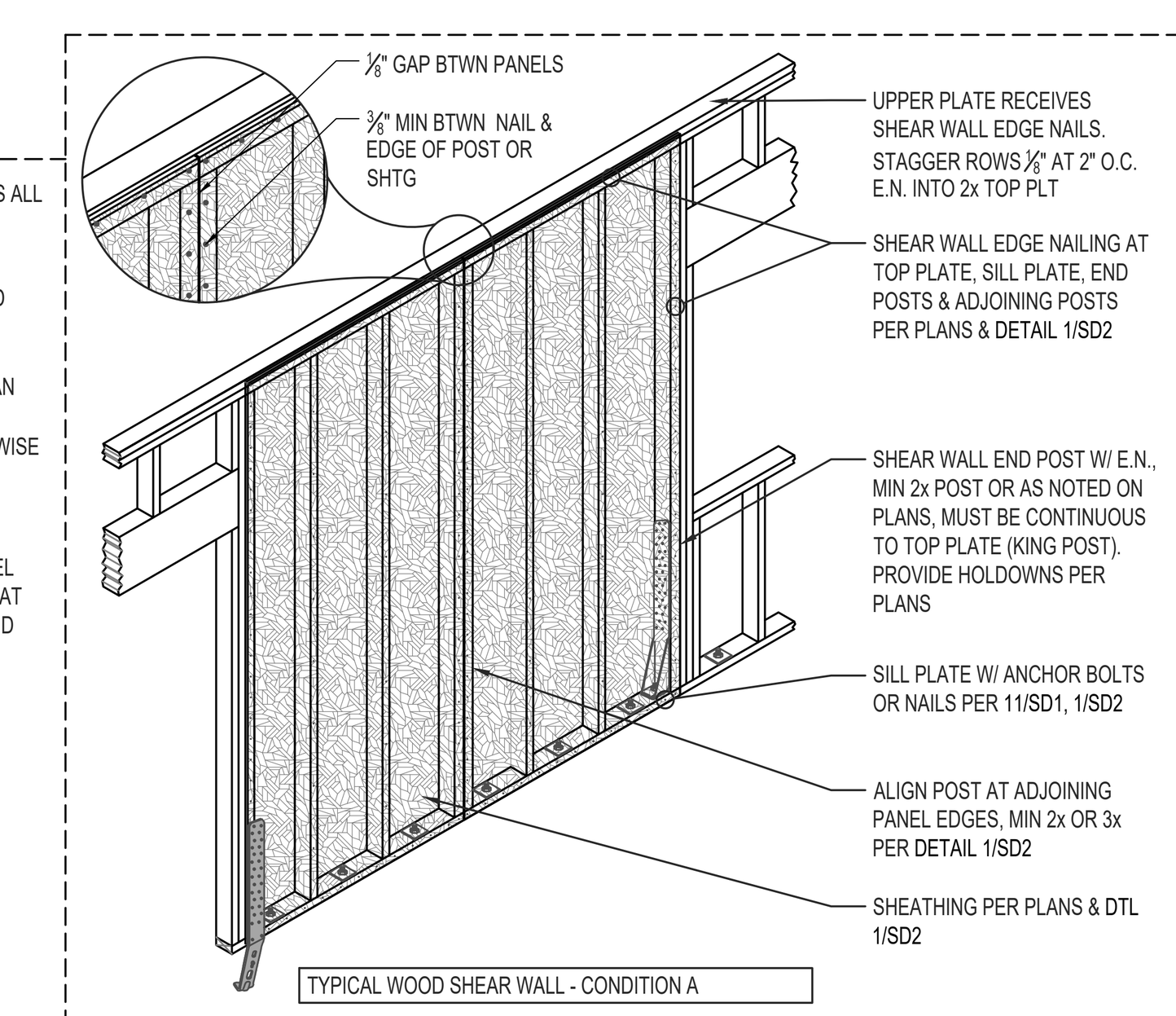

TYPICAL WOOD STUD WALL AND SHEAR WALL FRAMING — 5
SCALE: N.T.S.

HORIZONTAL DIAPHRAGM SCHEDULE - 2022 CBC						
SYMBOL (PER PLAN)	MAXIMUM SPACING	PANEL DESCRIPTION	NAIL SIZE	EDGE NAILING	BOUNDARY NAILING	FIELD NAILING
D1	ROOF 24" O.C.	UNBLOCKED DIAPHRAGM 15/32" WOOD STRUCTURAL PANEL, PII 24/O	10d	6" o.c.	6" o.c.	12" o.c.
D2	ROOF 24" O.C.	BLOCKED DIAPHRAGM 15/32" WOOD STRUCTURAL PANEL, PII 24/O	10d	4" o.c.	4" o.c.	12" o.c.

NOTES:
1. ALL ROOF AND FLOOR SHEATHING TO BE EXPOSURE 1 OR EXTERIOR PER TABLE 2306.3.1. 7/16" SHEATHING IS NOT STRUCTURALLY ACCEPTABLE FOR ROOF SHEATHING.
2. FOR FLOOR SHEATHING, WOOD STRUCTURAL PANEL SHALL BE UNDERLAYMENT GRADE. ALL FLOOR SHEATHING SHALL BE GLUED TO FRAMING.
3. ALL ROOF NAILS MUST BE 8d. ALL FLOOR NAILS MUST BE 10d. IN LIEU OF 10d NAILS AT FLOOR SHEATHING, #8 x 2" LONG SCREWS MAY BE USED.
4. FOR ALL FLOOR SHEATHING, PANEL EDGES SHALL HAVE APPROVED TONGUE-AND -GROOVE JOINTS OR SHALL BE SUPPORTED WITH BLOCKING. NOT REQUIRED WHEN LIGHTWEIGHT CONCRETE IS PLACED OVER THE SUBFLOOR.

HORIZONTAL ROOF AND FLOOR SHEATHING SCHEDULE — 3
SCALE: N.T.S.

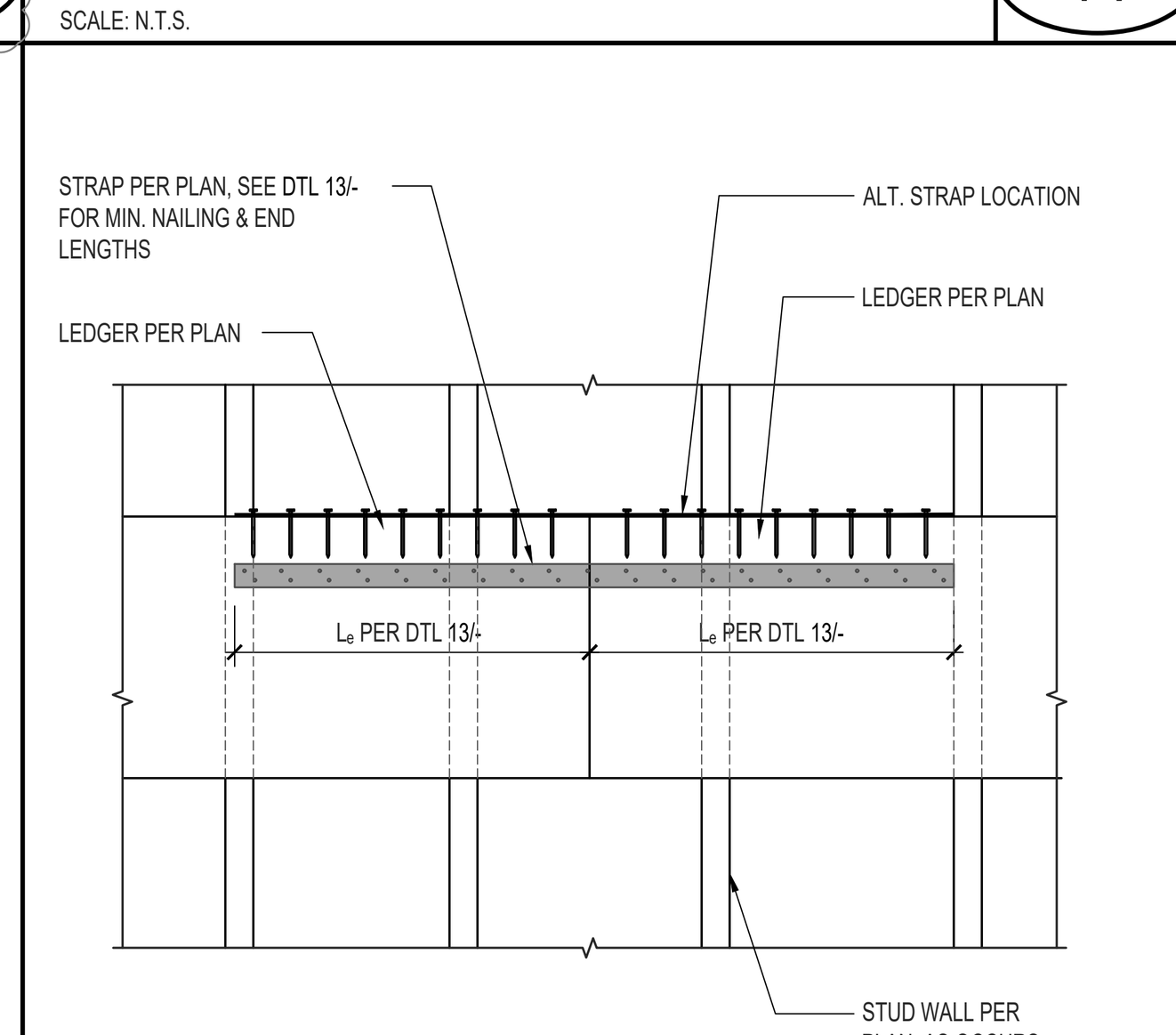

TYPICAL LEDGER SPLICE — 18
SCALE: N.T.S.

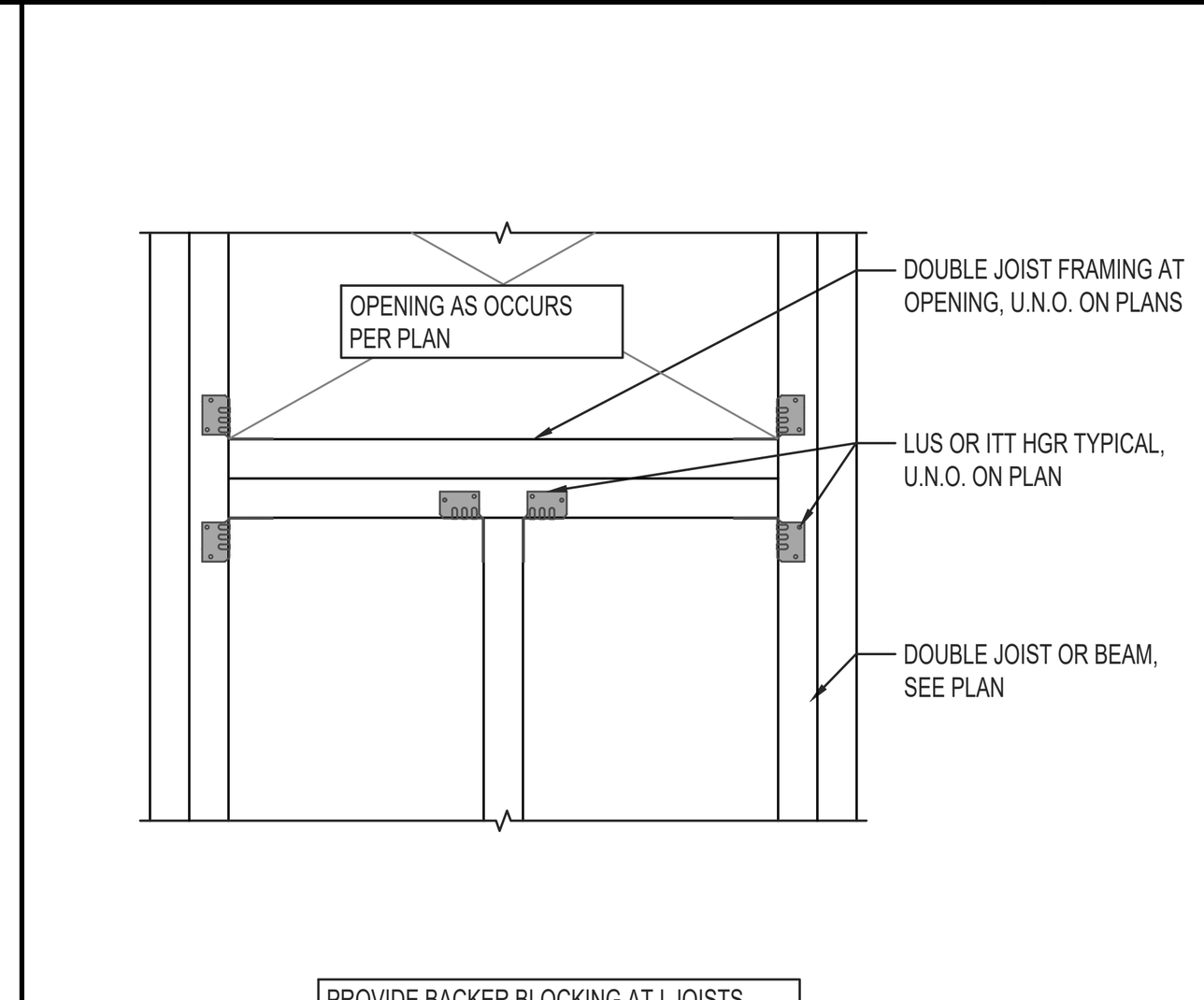

JOIST HEAD-OUT FRAMING — 11
SCALE: N.T.S.

STK ARCHITECTURE, INC.
42095 ZEVO DR., TEMECULA, CALIFORNIA 92590-3780
Phone: 951.296.9110 Fax: 951.296.6079 Email: stk@stkinc.com

CONSULTANT:
ISE STRUCTURAL ENGINEERS
27369 VIA INDUSTRIA
TEMECULA, CA 92590
TELE: 951.600.0032
WWW.ISEENGINEERS.COM
SOCAL | NORCAL | COLORADO
ISE PROJECT NO.: 24-8400.67
PROJECT MANAGER:
SANDY FONG EXT. 1016
SANDY@ISEENGINEERS.COM

REVIEWED FOR CODE COMPLIANCE
THESE PLANS AND DOCUMENTS HAVE BEEN REVIEWED AND FOUND TO BE IN COMPLIANCE WITH THE APPLICABLE CODES AND REQUIREMENTS OF THE JURISDICTION. ISSUANCE OF A PERMIT IS RECOMMENDED SUBJECT TO APPROVAL BY OTHER DEPARTMENTS AND ANY NOTED CONDITIONS. THE STAMPING OF THESE PLANS SHALL NOT BE HELD TO PERMIT OR BE AN APPROVAL OF ANY VIOLATION OF CODES, ORDINANCES, STANDARDS, NOR RELIEVE THE OWNER, DESIGN PROFESSIONAL OF RECORD OR CONTRACTOR OF COMPLIANCE WITH APPLICABLE CODES AND ORDINANCES. PLAN REVIEW OF DOCUMENTS DOES NOT AUTHORIZE CONSTRUCTION TO PROCEED IN VIOLATION OF ANY FEDERAL, STATE OR LOCAL REGULATIONS.
BUILDING BUREAU SOLUTIONS, INC.
REVIEWED BY: STEVE KIM, P.E., CASp
THIS SET OF PLANS AND SPECIFICATIONS MUST BE KEPT ON THE JOB SITE AT ALL TIMES AND IT IS UNLAWFUL TO MAKE ANY CHANGES OR ALTERATIONS WITHOUT PERMISSION FROM THE BUILDING OFFICIAL. OCCUPANCY OF STRUCTURE IS NOT PERMITTED UNTIL FINAL APPROVAL IS GRANTED BY ALL APPLICABLE DEPARTMENTS.

PROJECT ADMINISTERED BY:
CITY OF PERRIS
101 NORTH "D" STREET
PERRIS, CA 92570

PROJECT NAME:
FIRE STATION 105 AND ADMINISTRATION BUILDING

PROJECT CIP: F077

2495 MURRIETA ROAD
PERRIS, CA 92585

ISSUE INFORMATION:

DATE:	INFORMATION:
11-26-25	95% CD SUBMITTAL
02-05-26	△1 BLDG. & SAFETY 1st PLAN CHECK

SHEET INFORMATION:

STK PROJECT NO.:	365-03-25
SCALE:	AS NOTED
DATE:	FEBRUARY 2026
PLOT DATE:	–
DRAWN BY:	SF

SEAL:
REGISTERED PROFESSIONAL ENGINEER SANDY FONG C83965 CIVIL STATE OF CALIFORNIA

SHEET TITLE:
STRUCTURAL GENERAL FRAMING DETAILS

SHEET NO.:
SD2

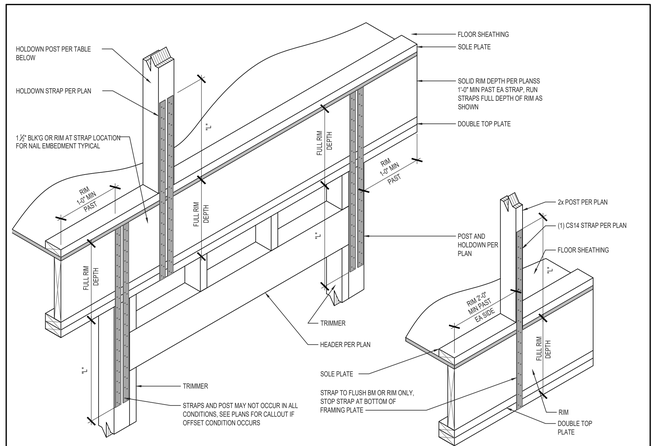

OFFSET HOLDOWN CONNECTION - CONDITION C

SINGLE STRAP TO RIM ONLY CONNECTION - CONDITION D

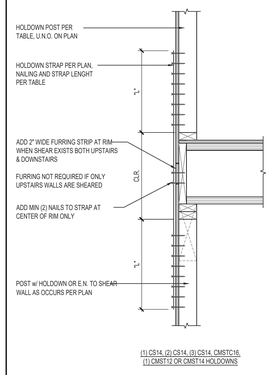

(1) CS14, (2) CS14, (3) CS14, CMSTC16, (1) CMST12 OR CMST14 HOLDOWNS

HARDWARE NAILING, LENGTH, & MINIMUM POST SIZE				
HD	POST*	"L" **	CUT LENGTH ***	NAILING
CS14	2x4	15"	30" + CLEAR	(15) 10d EACH END
(2) CS14	4x4	15"	30" + CLEAR	(15) 10d EACH END PER STRAP
(3) CS14	4x6	15"	30" + CLEAR	(15) 10d EACH END PER STRAP
CMSTC16	4x4	20"	40" + CLEAR	(25) 16d SINKERS EACH END
CMST14	4x4	30"	60" + CLEAR	(33) 10d COMMON EACH END
CMST12	4x4	39"	78" + CLEAR	(43) 10d COMMON EACH END

* MINIMUM U.N.O. ON PLANS.
** CENTER STRAP ON RIM JOIST OR PLATE
*** CLEAR = CLEAR SPAN OF FLOOR DEPTH

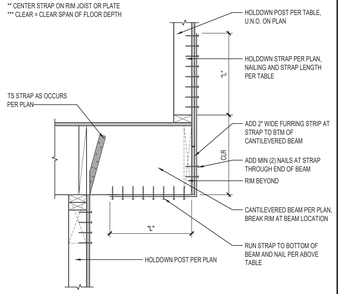

TYPICAL FLOOR-TO-FLOOR HOLDOWN CONNECTION - SIDE VIEW - CONDITION A

TYPICAL CANTILEVERED FLOOR HOLDOWN CONNECTION - CONDITION B

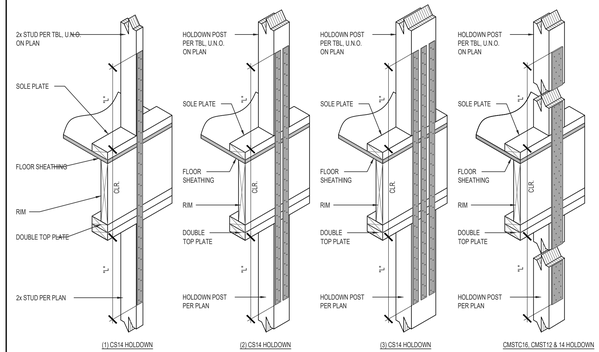

(1) CS14 HOLDOWN | (2) CS14 HOLDOWN | (3) CS14 HOLDOWN | CMSTC16, CMST12 & 14 HOLDOWN

TYPICAL FLOOR-TO-FLOOR HOLDOWN CONNECTIONS - CONDITION A

TYPICAL HOLDOWN CONNECTIONS

SCALE: N.T.S.

1

STK
42095 ZEVO DR., TEMECULA, CALIFORNIA 92590-3780
Phone: 951.296.9110 Fax: 951.296.6079 Email: stk@stkinc.com

CONSULTANT:

ISE
STRUCTURAL ENGINEERS
27369 VIA INDUSTRIA
TEMECULA, CA 92590
TELE 951 600 0032
WWW.ISEENGINEERS.COM
SOCAL | NORCAL | COLORADO
ISE PROJECT NO.: 24-8400.67

PROJECT MANAGER:
SANDY FONG EXT. 1016
SANDY@ISEENGINEERS.COM

REVIEWED FOR CODE COMPLIANCE
THESE PLANS AND SPECIFICATIONS ARE FOUND TO BE IN CONFORMANCE WITH THE CITY OF PERRIS CODES & ORDINANCES. ISSUANCE OF THESE PLANS IS SUBJECT TO APPROVAL BY OTHER AGENCIES HAVING JURISDICTION OVER THE PROJECT. THE APPROVAL OF THESE PLANS DOES NOT RELIEVE THE OWNER OR CONTRACTOR OF RESPONSIBILITY FOR COMPLIANCE WITH APPLICABLE CODES, STANDARDS, NOR APPROVAL OF ANY VIOLATIONS TO THE CODES, STANDARDS, NOR RELIEVE THE OWNER OR CONTRACTOR OF RESPONSIBILITY FOR CORRECTING ERRORS OMISSIONS CONTAINED IN THESE DOCUMENTS DURING CONSTRUCTION. ANY CHANGES MADE IN THESE PLANS AFTER APPROVAL BY THE BUILDING DEPARTMENT MAY BE CONSIDERED IN VIOLATION OF ANY FEDERAL, STATE OR LOCAL LAWS.
BUILDING BUREAU / DEVELOPING INC.
REVIEWED BY: STEVEN ROMERO
DATE: 02/05/2026
THIS REVIEW DOES NOT AUTHORIZE ANY DEVIATIONS FROM THE CODES, ORDINANCES, OR REGULATIONS ENFORCED BY THE BUILDING DEPARTMENT.

PROJECT ADMINISTERED BY:

CITY OF PERRIS

101 NORTH "D" STREET
PERRIS, CA 92570

PROJECT NAME:

FIRE STATION 105
AND ADMINISTRATION
BUILDING

PROJECT CIP: F077

2495 MURRIETA ROAD
PERRIS, CA 92585

ISSUE INFORMATION:

DATE:	INFORMATION:
11-26-25	95% CD SUBMITTAL
02-05-26	1 BLDG. & SAFETY 1st PLAN CHECK

SHEET INFORMATION:

STK PROJECT NO.:	365-03-25
SCALE:	AS NOTED
DATE:	FEBRUARY 2026
PLOT DATE:	–
DRAWN BY:	SF

SEAL:

REGISTERED PROFESSIONAL ENGINEER
SANDY FONG
C83965
CIVIL
STATE OF CALIFORNIA

SHEET TITLE:

STRUCTURAL
GENERAL FRAMING
DETAILS

SHEET NO.:

SD2.1

W:\8400 - STK\8400.67 - Perris Fire Station\02 - Drawings\Details.dwg
02/05/2026 4:14PM

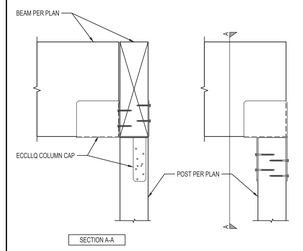

COLUMN CAP CONNECTION 23

SCALE: N.T.S.

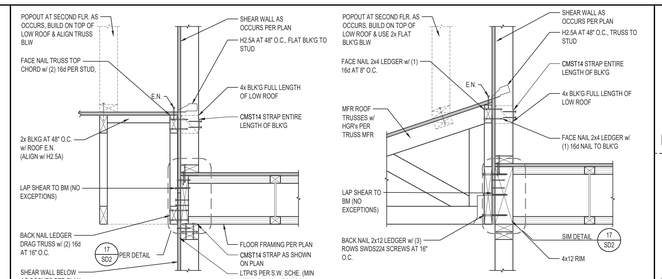

TYPICAL LOW ROOF SHEAR TRANSFER CONNECTIONS 14

SCALE: N.T.S.

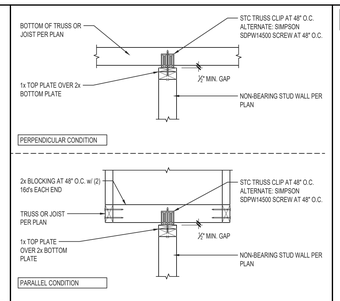

NON-BEARING WALL TRUSS/JOIST CLIP 10

SCALE: N.T.S.

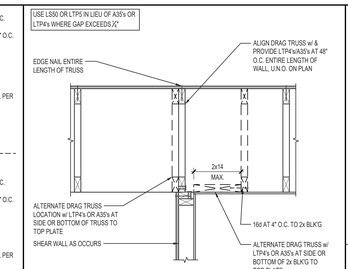

TRUSSES PARALLEL TO INTERIOR SHEARWALL 4

SCALE: N.T.S.

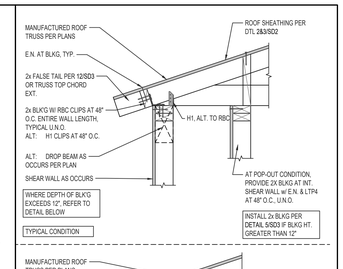

ROOF AT EXTERIOR WALL 1

SCALE: N.T.S.

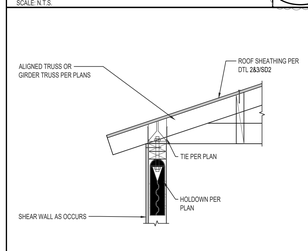

TRUSS SEISMIC TIES TO WALL 24

SCALE: N.T.S.

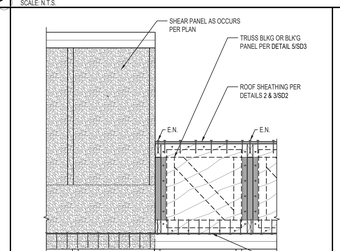

LOW ROOF SHEAR TRANSFER 19

SCALE: N.T.S.

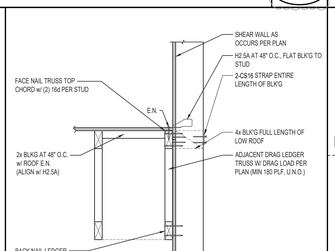

LOW ROOF SHEAR TRANSFER 15

SCALE: N.T.S.

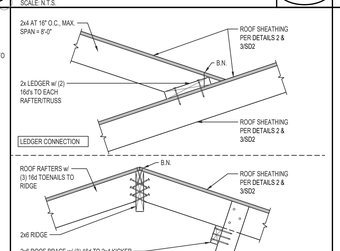

CALIFORNIA FRAMING 11

SCALE: N.T.S.

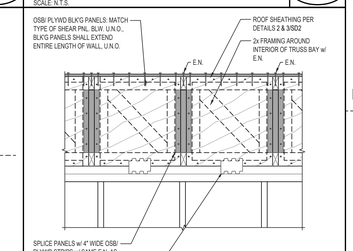

TRUSSES PARALLEL TO INTERIOR SHEARWALL 4

SCALE: N.T.S.

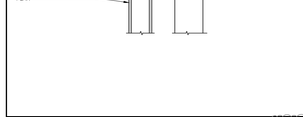

POP-OUT FRAMING 25

SCALE: N.T.S.

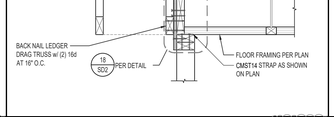

LOW ROOF SHEAR TRANSFER 20

SCALE: N.T.S.

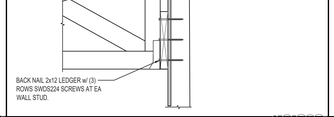

LOW ROOF SHEAR TRANSFER 16

SCALE: N.T.S.

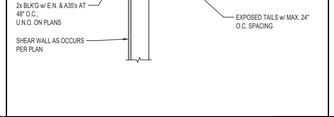

EXPOSED RAFTER TAIL TO TRUSS 12

SCALE: N.T.S.

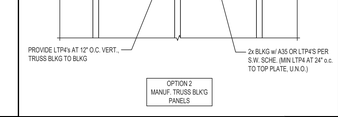

SHEAR TRANSFER AT TRUSS BLK'G TO INTERIOR SHEAR WALL 5

SCALE: N.T.S.

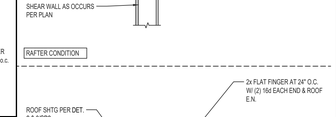

ROOF AT EXTERIOR WALL 1

SCALE: N.T.S.

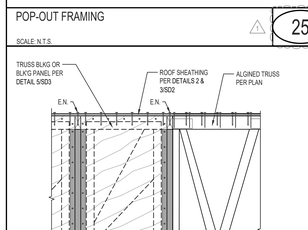

TRUSS BLOCKING SHEAR DRAG TRANSFER TO ALIGNED TRUSS 26

SCALE: N.T.S.

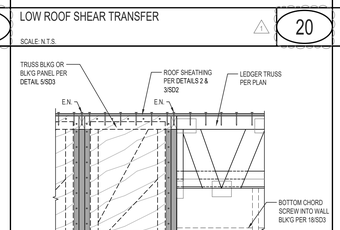

TRUSS BLOCKING SHEAR DRAG TRANSFER TO INTERIOR SHEAR WALL 21

SCALE: N.T.S.

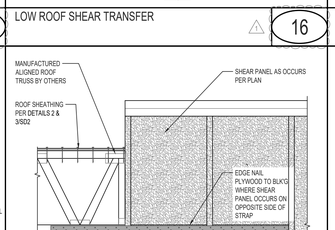

ALIGNED TRUSS SHEAR DRAG TRANSFER TO INTERIOR SHEAR WALL 17

SCALE: N.T.S.

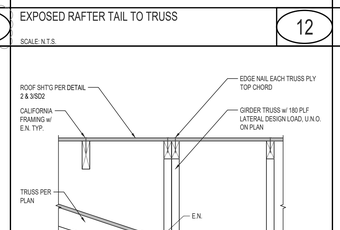

CALIFORNIA FRAMING AT DRAG TRUSS 13

SCALE: N.T.S.

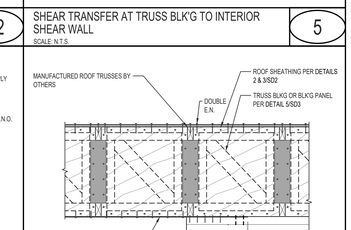

SHEAR TRANSFER AT TRUSS BLK'G TO INTERIOR SHEAR WALL 5

SCALE: N.T.S.

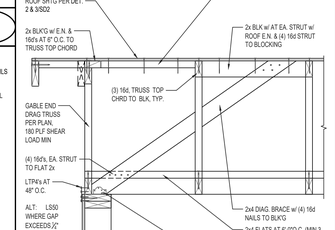

GABLE END ROOF AT EXTERIOR WALL 2

SCALE: N.T.S.

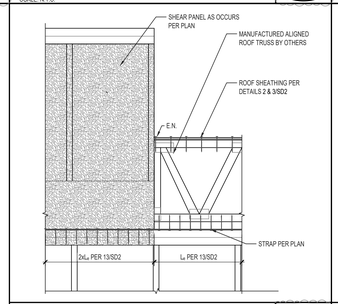

LOW ROOF SHEAR TRANSFER 22

SCALE: N.T.S.

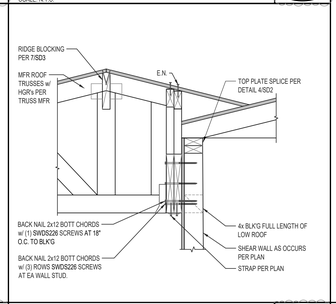

LOW ROOF SHEAR TRANSFER 18

SCALE: N.T.S.

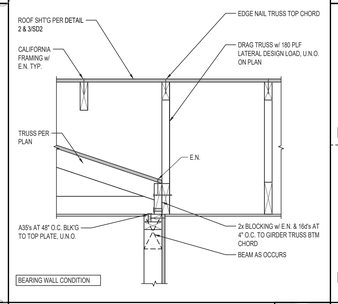

CALIFORNIA FRAMING AT DRAG TRUSS 13

SCALE: N.T.S.

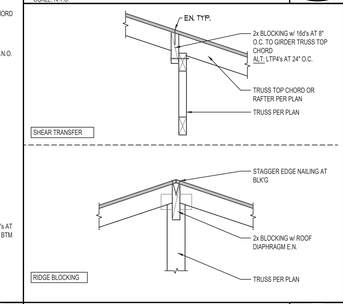

SHEAR DRAG TRANSFER TO INTERIOR SHEAR WALL W/ TRUSS BLK'G OR BLK'G PANELS 6

SCALE: N.T.S.

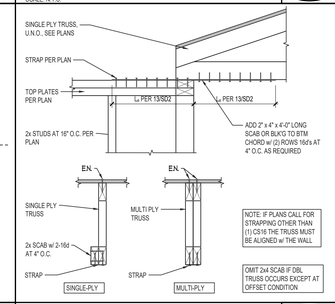

DRAG TRUSS CONNECTION 3

SCALE: N.T.S.

STK
STEVE KRAUSE + ASSOCIATES, INC.
42095 ZEVO DR., TEMECULA, CALIFORNIA 92590-3780
Phone: 951.296.9110 Fax: 951.296.6079 Email: stk@stkinc.com

CONSULTANT:

REVIEWED FOR CODE COMPLIANCE

THESE PLANS AND SPECIFICATIONS MAY NOT BE FOUND TO BE IN COMPLIANCE WITH ALL APPLICABLE CODES IN YOUR JURISDICTION. IT IS THE RESPONSIBILITY OF THE OWNER, SUBJECT TO APPROVAL BY CITY OR COUNTY BUILDING OFFICIALS DURING THE PLAN CHECK PROCESS, TO MAKE ANY CHANGES NECESSARY FOR APPROVAL OF ALL APPLICABLE CODES. ANY SUCH CHANGES, NOR FAILURE TO MAKE SUCH CHANGES, SHALL RELIEVE THE OWNER OR CONTRACTOR OF RESPONSIBILITY FOR COMPLIANCE WITH ALL APPLICABLE CODES. THESE DOCUMENTS SHALL NOT BE USED IN WHOLE OR IN PART IN ANY MANNER DEEMED IN VIOLATION OF ANY FEDERAL, STATE OR LOCAL LAW.

BUILDING BUREAU LIQUIPPING INC.
REVIEWED BY: STEVEN R. HOWELL

ISE
STRUCTURAL ENGINEERS
27369 VIA INDUSTRIA
TEMECULA, CA 92590
TELE 951 600 0032
WWW.ISEENGINEERS.COM
SOCAL | NORCAL | COLORADO

ISE PROJECT NO.: 24-8400.67

PROJECT MANAGER:
SANDY FONG EXT. 1016
SANDY@ISEENGINEERS.COM

PROJECT ADMINISTERED BY:

CITY OF PERRIS

101 NORTH "D" STREET
PERRIS, CA 92570

PROJECT NAME:

FIRE STATION 105 AND ADMINISTRATION BUILDING

PROJECT CIP: F077

2495 MURRIETA ROAD
PERRIS, CA 92585

ISSUE INFORMATION:

DATE:	INFORMATION:
11-26-25	95% CD SUBMITTAL
02-05-26	1 BLDG. & SAFETY 1st PLAN CHECK

SHEET INFORMATION:

STK PROJECT NO.:	365-03-25
SCALE:	AS NOTED
DATE:	FEBRUARY 2026
PLOT DATE:	–
DRAWN BY:	SF

SEAL:

REGISTERED PROFESSIONAL ENGINEER SANDY FONG EXP. 12/31/27 C88965 CIVIL STATE OF CALIFORNIA

SHEET TITLE:

STRUCTURAL ROOF FRAMING DETAILS

SHEET NO.:

SD3

W:\8400 - STK\8400.67 - Perris Fire Station\02 - Drawings\Details.dwg
02/03/2026 4:14PM

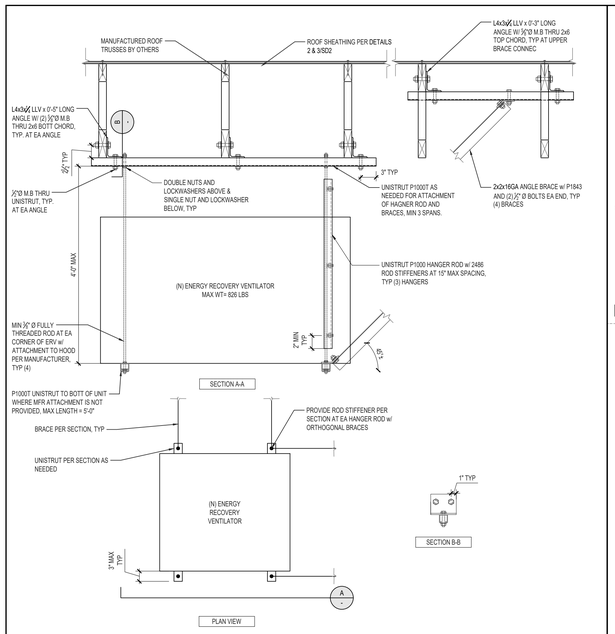

ERV MOUNTING

SCALE: N.T.S.

14

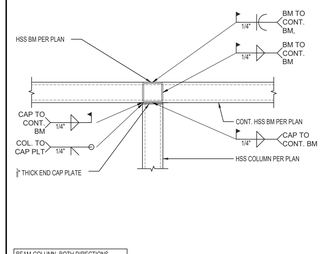

BEAM-COLUMN, BOTH DIRECTIONS

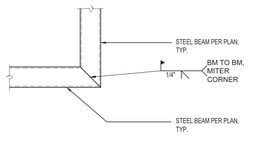

BEAM-BEAM, MITERED CORNER

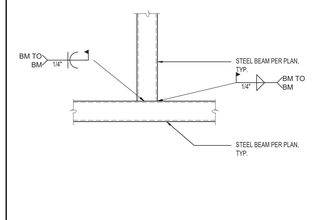

BEAM-BEAM, T INTERSECTION

HSS TO HSS WELDED CONNECTIONS

SCALE: N.T.S.

12

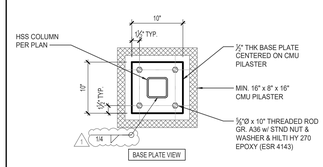

HSS COLUMN TO PILASTER CONNECTION

SCALE: N.T.S.

13

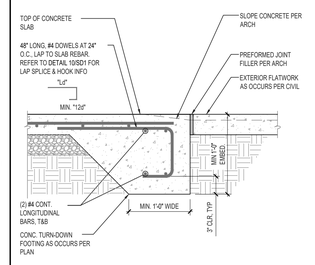

TRASH ENCLOSURE, CONCRETE TURN-DOWN FOOTING

SCALE: N.T.S.

9

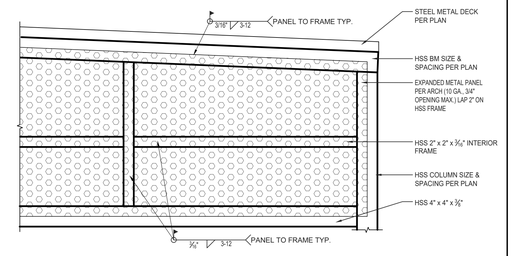

EXPANDED METAL PANEL & HSS FRAME DETAIL

SCALE: N.T.S.

3

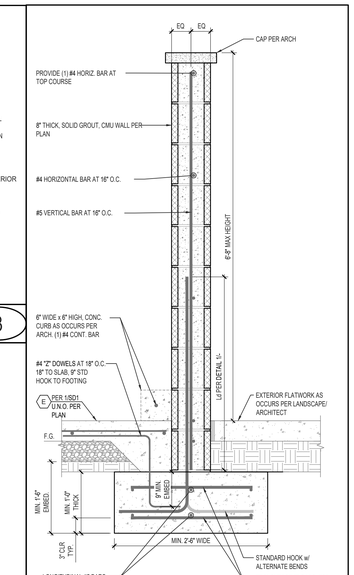

TRASH ENCLOSURE, TYPICAL FREE-STANDING CMU WALL FOOTING

SCALE: N.T.S.

1

NOTE: REFER TO DTL 5/-FOR ADD'L INFO NOT SHOWN

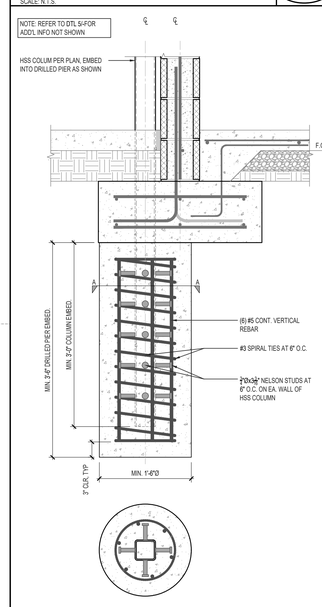

TRASH ENCLOSURE, HSS POST AT CMU WALL, POST EMBED w/ DRILLED PIER

SCALE: N.T.S.

10

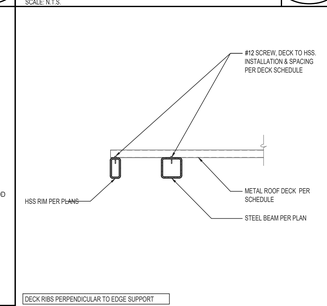

DECK RIBS PERPENDICULAR TO EDGE SUPPORT

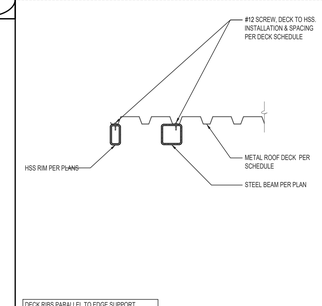

DECK RIBS PARALLEL TO EDGE SUPPORT

METAL DECK TO HSS

SCALE: N.T.S.

11

METAL DECK DIAPHRAGM SCHEDULE

DECK MARK	GALVANIZED (GRV) VERCO DECK TYPE	ALLOWABLE SPAN	GAGE	DECK PROPERTIES			DECK ATTACHMENT			ALLOWABLE DIAPHRAGM LATERAL SHEAR LOAD
							SIDE LAPS	SCREWS TO SUPPORTS		
				MIN. I_n (in^4)	MIN. $+S_n$ (in^4)	MIN. $-S_n$ (in^4)	#10 SIDEJOINT SPACING	#12 SCREWS SPACING AT DECK RIBS PARALLEL TO SUPPORT	#12 SCREWS PER SHEET AT DECK RIBS PERPENDICULAR TO SUPPORT	
D1	HSB-36-SS	5'-6"	20	0.219	0.230	0.237	24"	12"	4	352 PLF
D2	HSNO-NS	12'-0"	20	0.889	0.452	0.509	24"	8"	5	232 PLF

1. REFER TO FRAMING PLANS FOR APPLICATION LOCATIONS.
2. ROOF DECK ATTACHMENTS TO SUPPORTS (MIN. 0.0385 INCHES THICK) SHALL BE MADE BY #12 SELF-DRILLING, SELF-TAPPING, SDI RECOGNIZED SCREWS FROM BUILDEX, ELCO, HILTI, AND SIMPSON STRONG TIE PER THE SCHEDULE ABOVE & AS INDICATED BELOW.
3. ALL DECKS SHALL BE CONTINUOUS OVER SINGLE SPANS AND CANTILEVERS.
4. THE DIMENSION FROM THE FIRST AND LAST SIDELAP CONNECTION WITHIN EACH SPAN IS TO BE NO MORE THAN ONE-HALF OF THE SPECIFIED SPACING.

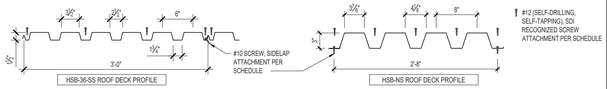

METAL DECK DIAPHRAGM SCHEDULE

SCALE: N.T.S.

4

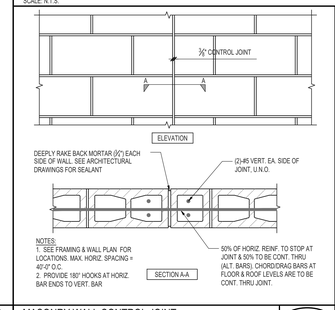

MASONRY WALL CONTROL JOINT

SCALE: N.T.S.

7

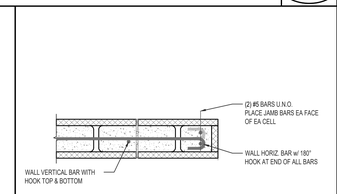

TYPICAL MASONRY JAMB BAR

SCALE: N.T.S.

5

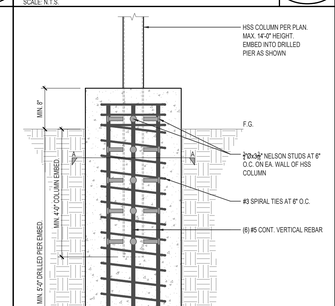

FUEL GENERATOR/TANK CANOPY, DRILLED PIER

SCALE: N.T.S.

8

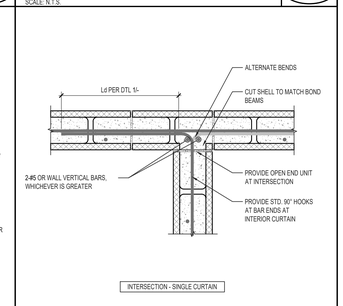

TYPICAL CMU WALL CONSTRUCTIONS AT CORNERS & INTERSECTIONS

SCALE: N.T.S.

6

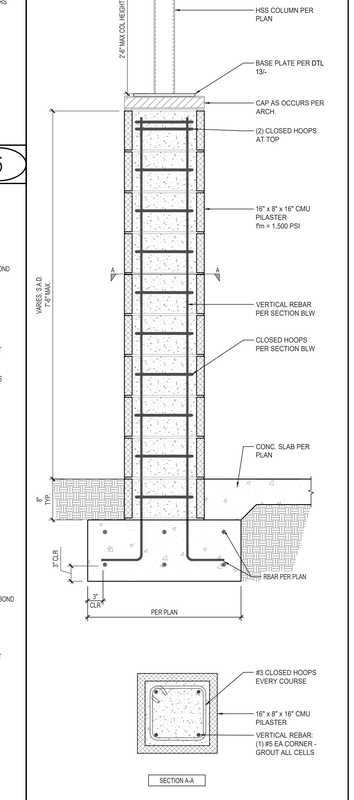

CMU PILASTER AT HSS COLUMN DETAIL

SCALE: N.T.S.

2

STK
42095 ZEVO DR., TEMECULA, CALIFORNIA 92590-3780
Phone: 951.296.9110 Fax: 951.296.6079 Email: stk@stkinc.com

CONSULTANT:

ISE
STRUCTURAL ENGINEERS
2 7 3 6 9 - V I A - I N D U S T R I A
T E M E C U L A , C A 9 2 5 9 0
T E L E : 9 5 1 . 6 0 0 . 0 0 3 2
W W W . I S E E N G I N E E R S . C O M
SOCAL | NORCAL | COLORADO
ISE PROJECT NO.: 24-8400.67

PROJECT MANAGER:
SANDY FONG EXT. 1016
SANDY@ISEENGINEERS.COM

PROJECT ADMINISTERED BY:

CITY OF PERRIS

101 NORTH "D" STREET
PERRIS, CA 92570

PROJECT NAME:

FIRE STATION 105 AND ADMINISTRATION BUILDING

PROJECT CIP: F077

2495 MURRIETA ROAD
PERRIS, CA 92585

ISSUE INFORMATION:

DATE:	INFORMATION:
11-26-25	95% CD SUBMITTAL
02-05-26	1 BLDG. & SAFETY 1st PLAN CHECK

SHEET INFORMATION:

STK PROJECT NO.:	365-03-25
SCALE:	AS NOTED
DATE:	FEBRUARY 2026
PLOT DATE:	–
DRAWN BY:	SF

SEAL:

REGISTERED PROFESSIONAL ENGINEER SANDY FONG
C88965
CIVIL
STATE OF CALIFORNIA

SHEET TITLE:

SITE STRUCTURE DETAILS

SHEET NO.:

SD4

02/5/2026 11:34AM W:\8400 - STK\8400.67 - Perris Fire Station\02 - Drawings\Details.dwg

FIXTURE SCHEDULE

SYMBOL	SPECIFICATION	CONNECTION SIZE: WASTE	TRAP	VENT	CW	HW	ELEC.
WC 1	WATERCLOSET: KOHLER "HIGHLINE" K-3399, ADA, 16-1/2" HIGH RIM, (1.28 GPF) FLOOR MOUNTED, ELONGATED BOWL, TANK TYPE W/ TRIP LEVER LOCATED ON LEFT SIDE WHITE VITREOUS CHINA. BEMIS PLASTIC SEAT MODEL 2L215ST, ELONGATED, OPEN FRONT, 1/4 ANGLE STOPS, STAIN & CHEMICAL RESISTANT.	3"	INT.	2"	1/2"	-	-
WC 1	WATERCLOSET: KOHLER "HIGHCLIFF ULTRA" K-96057, ADA COMPLIANT, 16-5/8" HIGH RIM, (1.28 GPF), FLOOR MOUNTED, ELONGATED BOWL, SIPHON JET, 1-1/2" TOP SPUD, WHITE VITREOUS CHINA. SLOAN ROYAL 111-1.28 SG MANUAL FLUSH VALVE (1.28 GPF). BEMIS PLASTIC SEAT MODEL 2L215ST, ELONGATED, OPEN FRONT, STAIN & CHEMICAL RESISTANT.	3"	INT.	2"	1"	-	-
U 1	URINAL: KOHLER "BARDON" K-4991-ET, ADA 17" HIGH RIM, (0.125 GPF), WALL HUNG, WHITE VITREOUS CHINA, 3/4" TOP SPUD, SLOAN ROYAL 186-0.125 FLUSH VALVE. JOSAM 17560-UR URINAL CARRIER FLOOR MOUNTED BEARING PLATE TYPE.	2"	2"	1-1/2"	3/4"	-	-
L 1	LAVATORY: KOHLER "PENNINGTON" K-2196-4-0, WHITE VITREOUS CHINA, SELF RIMMING COUNTERTOP MOUNT W/ FAUCET HOLES ON 4" CENTERS. CHICAGO FAUCET 420-E2805ABCP DECK MOUNTED 4" FIXED CENTERS, W/ 0.5 GPM NON-AERATING OUTLET, 4-1/4" LEVER HANDLE. PROVIDE ASSE 1070 APPROVED TMV SET TO 110°, GRID STRAINER DRAIN W/ 1-1/2" CAST BRASS P-TRAP WITH CHROME FINISH, W/ QUARTER TURN ANGLE STOPS. ON ADA COMPLIANT PROVIDE TRUEBRO LAV GUARD PER CBC 11B-606.5	2"	1-1/2"	1-1/2"	1/2"	1/2"	-
L 2	LAVATORY: KOHLER "CHESAPEAKE" K-1728, WHITE VITREOUS CHINA, WALL HUNG LAVATORY W/ FAUCET HOLES ON 4" CENTERS. CHICAGO FAUCET 420-E2805ABCP DECK MOUNTED 4" FIXED CENTERS, W/ 0.5 GPM NON-AERATING OUTLET, 4-1/4" LEVER HANDLE. PROVIDE ASSE 1070 APPROVED TMV SET TO 110°, GRID STRAINER DRAIN W/ 1-1/2" CAST BRASS P-TRAP WITH CHROME FINISH, W/ QUARTER TURN ANGLE STOPS. PROVIDE JOSAM 17000 SERIES WALL CARRIER, ON ADA COMPLIANT PROVIDE TRUEBRO LAV GUARD PER CBC 11B-606.5	2"	1-1/2"	1-1/2"	1/2"	1/2"	-
SH 1	SHOWER: ARCHITECT SPECIFICATIONS. CHICAGO FAUCET SH-PBT-13-031 TEMP-GARD PRESSURE BALANCE SHOWER MIXING VALVE, DIVERTER VALVE, (1.50 GPM) WALL SHOWER HEAD, ARM, HAND SHOWER HEAD W/ NON-POSITIVE SHUTOFF, FLEX HOSE, ESCUTCHEON & CHROME FLOOR DRAIN. ADA COMPLIANT. INSTALL PER CPC (SEC. 411.10)	2"	2"	1-1/2"	1/2"	1/2"	-
KS 1	ONE COMPARTMENT SINK: KOHLER "VAULT" K-3822-1, 25" X 22" X 9" STAINLESS STEEL SINGLE BOWL SINK, 18 GAUGE, SELF RIM, SINGLE FAUCET HOLE. CHICAGO FAUCET 434-ABCP PULL DOWN SIDE SPRAY MANUAL FAUCET, DECK MOUNTED SINGLE HOLE, SINGLE LEVER W/ 1.5 GPM OUTLET, PROVIDE ASSE 1070 APPROVED TMV SET TO 110°, CHROME BASKET STRAINERS W/ 1-1/2" CAST BRASS "LA" PATTERN P-TRAP WITH CHROME FINISH, W/ QUARTER TURN ANGLE STOPS.	2"	1-1/2"	1-1/2"	1/2"	1/2"	-
LS 1	ONE COMPARTMENT LAUNDRY SINK: KOHLER "BALLAD" K-5798-3, 25" X 22" X 9" STAINLESS STEEL SINGLE BOWL SINK, 18 GAUGE, SELF RIM, W/ FAUCET HOLES ON 4" CENTERS. CHICAGO FAUCET 895317GN8AE3ABCP DECK MOUNTED 4" FIXED CENTERS W/ 1.5 GPM AERATOR. PROVIDE ASSE 1070 APPROVED TMV SET TO 110°, CHROME BASKET STRAINERS W/ 1-1/2" CAST BRASS "LA" PATTERN P-TRAP WITH CHROME FINISH, W/ QUARTER TURN ANGLE STOPS.	2"	1-1/2"	1-1/2"	1/2"	1/2"	-
JS 1	SERVICE/JAN. SINK: KOHLER "WHITBY" K6710 WHITE ENAMEL CAST IRON FLOOR MOUNTED CORNER BASIN MOP SINK W/ K-8940 SINK RIM GUARD. CHICAGO 897-CP WALL MOUNTED 8" BODY, SERVICE SINK FAUCET W/ VACUUM BREAKER, HOSE THREADED OUTLET, PAIL HOOK, INTEGRAL STOPS & WALL BRACE.	3"	3"	1-1/2"	1/2"	1/2"	-
FD 1	FLOOR DRAIN: JOSAM 30002-5A FLOOR DRAIN W/LOC CAST IRON BODY W/CLAMP RING, FLANGE, ADJUSTABLE NIKALOY STRAINER, POLISHED BRONZE GRATE. PROVIDED WITH TRAP PRIMER CONNECTION FOR TP-1 OR TP-2	2"	2"	1-1/2"	-	-	-
FD 2	FLOOR DRAIN: JOSAM 30003-5A FLOOR DRAIN W/LOC CAST IRON BODY W/CLAMP RING, FLANGE, ADJUSTABLE NIKALOY STRAINER, POLISHED BRONZE GRATE. PROVIDED WITH TRAP PRIMER CONNECTION FOR TP-1 OR TP-2.	3"	3"	2"	-	-	-
FD 3	FLOOR DRAIN: JOSAM 32102-TG-SS-LAM-Z COATED CAST IRON FLOOR DRAIN W/ TWO-PIECE BODY WITH DOUBLE DRAINAGE FLANGE, W/LOC NON-PUNCTURING FLASHING COLLAR, WEEPHOLES, BOTTOM OUTLET, MEDIUM-DUTY LOSSE-SET ANTI-TITLING SUPER-FLO GRATE WITH PERIMETER DRAINAGE SLOTS. PROVIDED WITH TRAP PRIMER CONNECTION FOR TP-1 OR TP-2.	4"	4"	2"	-	-	-
FS 1	FLOOR SINK: JOSAM 49302 FLOOR SINK, 8" SQUARE TOP-MEDIUM RECEPTOR, 5-7/8" DEEP SUMP, ACID RESISTANT COATED INTERIOR AND GRATE. PROVIDED WITH TRAP PRIMER CONNECTION FOR TP-1 OR TP-2.	2"	2"	1-1/2"	-	-	-
TP 1	TRAP PRIMER: MIFAB. MODEL "MI-500" 1/2" INLET AND 1/2" OUTLET WITH OPTIONAL DISTRIBUTION UNIT. MAY BE LOCATED AS INDICATED ON DRAWINGS OR AS REQUIRED BY CODE. UPC LISTED. PROVIDED WITH A 12"X 12" ACCESS PANEL OR LARGER DEPENDING ON THE REQUIRED ACCESS TO THE EQUIPMENT AND SHUT-OFF VALVE. (CONTRACTOR TO VERIFY).	-	-	-	1/2"	-	-
TP 2	TRAP PRIMER: MIFAB. MODEL "MI-300-BP" 1/2" INLET AND 1/2" OUTLET WITH OPTIONAL DISTRIBUTION UNIT W/ BATTERY PACK , MAY BE LOCATED AS INDICATED ON DRAWINGS OR AS REQUIRED BY CODE. UPC LISTED. PROVIDED WITH A 18"X 18" ACCESS PANEL OR LARGER DEPENDING ON THE REQUIRED ACCESS TO THE EQUIPMENT AND SHUT-OFF VALVE. (CONTRACTOR TO VERIFY).	-	-	-	1/2"	-	BATT.
WHA 1	WATER HAMMER ARRESTOR: MIFAB, INC. MODEL "MWH" (SEE PLANS FOR SIZE). INSTALLED ON ALL QUICK CLOSING VALVES AND ALL VALVES WHICH CLOSE WITH THE FLOW OF FLUID, OR ON HEADERS SERVING MORE THAN ONE FIXTURE. PROVIDED WITH A 12"X 12" ACCESS PANEL.	-	-	-	-	-	-
WMB 1	WASH MACHINE BOX: OATEY 38101, 1/4 TURN VALVES WITH WATER HAMMER ARRESTORS & VACUUM BREAKERS.	2"	2"	1-1/2"	1/2"	1/2"	-
WS 1	WASH SINK - DECON AREA: ADVANCE TABCO 4-2-48, 48" x 21" x 14" TWO COMPARTMENT SINK, FREE STANDING, 16-GAUGE 430 STAINLESS STEEL W/ FAUCET HOLES ON 8" CENTERS. CHICAGO FAUCET 523-613-317ABCP WALL MOUNTED 8" CENTER W/ 1.5 GPM AERATOR, PROVIDE ASSE 1070 APPROVED TMV SET TO 110°, CHROME BASKET STRAINERS W/ 2" CAST BRASS L.A. PATTERN P-TRAP WITH CHROME FINISH, W/ QUARTER TURN ANGLE STOPS.	3"	2"	2"	3/4"	3/4"	-
WD 1	WATER DISPENSER: OASIS TRI-TEMP POU1ACTHSK AQUARIOUS POU COUNTERTOP COOLER, HOT AND COLD WATER DISPENSER. FEED OFF OF R.O. SYSTEM.	-	-	-	1/2"	-	-

PIPE MATERIAL SCHEDULE

SERVICE	PIPE MATERIAL & WEIGHT	TYPE OF JOINTS	PRESSURE FITTINGS MATERIAL	SHUT-OFF RATINGS PSI - SwP	VALVE
COLD WATER ABV. GROUND	COPPER L TUBE	SOLDERED	CAST BRONZE/ WROUGHT COPPER	125	BALL GATE CHECK
COLD WATER BELOW GROUND TO 5' OUTSIDE BUILDING	COPPER K TUBE	BRAZED	CAST BRONZE/ WROUGHT COPPER	125	BALL GATE
COLD WATER BELOW GROUND BEYOND 5'-0"	SCHEDULE 80 PVC	SOLVENT-WELD	PVC	125	GATE
HOT WATER ABV. GROUND	COPPER L TUBE	SOLDERED	CAST BRONZE/ WROUGHT COPPER	125	BALL CHECK
FUEL GAS	STEEL 40, BLACK STEEL 40, BLACK POLYETHYLENE PIPING STAINLESS STEEL TUBING	SCREWED WELDED PER MANF.	MALL. IRON STEEL WELD STAINLESS STEEL TUBING	150 150 PER MANF.	SQR HEAD COCK PER MANF.
VENT	NO-HUB CAST IRON	NO-HUB	N/A	N/A	N/A
WASTE, SOIL & ROOF DRAINS BELOW GRADE	SCH 40 PVC DWV SCHEDULE 40 ABS	SOLVENT-WELD	ABS	N/A	N/A
WASTE, SOIL & ROOF DRAINS ABOVE GRADE	NO-HUB CAST IRON	NO-HUB	N/A	N/A	N/A
CONDENSATE	COPPER L TUBE	SOLDERED	BRONZE	125	N/A
COMPRESSED AIR	COPPER K TUBE	BRAZED	CAST BRONZE/ WROUGHT COPPER	150	-

NOTE: ALL EXPOSED FUEL GAS PIPING SHALL BE PRIME AND PAINTED, COORDINATE COLOR WITH ARCHITECT.

PIPE INSULATION SCHEDULE

FLUID TEMPERATURE RANGE (°F)	CONDUCTIVITY RANGE (IN BTU-INHR PER SQFT/°F)	INSULATION MEAN RATING TEMPERATURE (°F)		PIPE SIZE (IN. DIA.) < 1	1 to < 1.5	1.5 to < 4	4 to < 8	8 and larger
				REQUIRED INSULATION THICKNESS (IN.)				
SPACE HEATING, HOT WATER SYSTEMS (STEAM, STEAM CONDENSATE AND HOT WATER) AND SERVICE WATER HEATING SYSTEMS								
105° - 140°	0.22 - 0.28	100°	INCHES	1.0	1.5	1.5	1.5	1.5
			R-VALUE	R-7.7	R-12.5	R-11	R-9	R-8

COLD WATER SCHEDULE

PLUMBING SYSTEM FRICTION LOSS

F.U.'s : 139.5 GPM : 77

MIN. FRICTION LOSS (PSI)	A=	35	(35PSI FOR FLUSHVALVE & PRESSURE ASSISTED TANK)
ELEV. ABOVE ST. MAIN (FT.)	B=	12	(FROM CIVIL PLANS)
DAILY ST. HIGH PRESSURE (PSI)	C=	72	(FROM LOCAL WATER DISTRICT)
DIST. FROM ST. TO HIGHEST FIXTURE	D=	315	(FROM PLANS, IN FEET)
(N) 2" METER PRESSURE LOSS (PSI)	E=	5.5	(UPC APPENDIX A.1)
(N) BACKFLOW DEVICE LOSS (PSI)	F=	13	
PRV DEVICE LOSS (PSI)	G=	N/A	
SYSTEM STATIC PRESSURE LOSS (FT. HD.)	H=	5.16	H = (B) (0.43)
FRICTION LOSS AVAILABLE TO SYSTEM	I=	13.34	I = C - A - E - F - G - H
TOTAL DEVELOPED LENGTH = DIST. FROM ST. TO HIGHEST FIXTURE PLUS FITTING LOSS	J=	441	J = (D) (1.4)
FRICTION LOSS/100 FT.	K=	3.03	K = (I/J) (100)

MAXIMUM VELOCITY NOT TO EXCEED 8FPS. (MAX. FRICTION LOSS ALLOWABLE)

PLUMBING SIZING FORM

PIPE SIZE IS BASED ON CHART A 105.1(1) @ 3.0 P.S.I. / 100 FT.

FIXTURE UNITS ARE BASED ON TABLE A 103.1(2) FROM APPENDIX A

COLD WATER PIPE SIZE SCHEDULE

FIXTURE UNITS

SIZE	F. TANK	F. VALVE	GPM	VELOCITY
1/2"	1	0	1.8	3.0
3/4"	5	0	4.8	3.5
1"	13	0	10	4.0
1-1/4"	24	0	17	4.5
1-1/2"	47	10	27	5.0
2"	158	64	56	6.0
2-1/2"	380	250	100	7.5
3"	850	800	160	8.0
4"	1750	1750	230	8.0

HOT WATER PIPE SIZE SCHEDULE

FIXTURE UNITS

SIZE	F. TANK	F. VALVE	GPM	VELOCITY
1/2"	1	0	1.8	3.0
3/4"	5	0	4.8	3.5
1"	13	0	10	4.0
1-1/4"	24	0	17	4.5
1-1/2"	40	0	25	4.8

TOTAL FIXTURE UNITS

NUMBER	FIXTURE	CW UNIT	CW TOTAL	HW UNIT	HW TOTAL
3	WC - FVALVE	5	15	-	-
8	WC - TANK	2.5	20	-	-
11	L	1	11	.75	8.25
3	U	4	12	-	-
6	SH	2	12	1.5	9
1	SINK	1	1	.75	.75
2	KS	1.5	3	1.125	2.25
1	LS	1.5	1.5	1.125	1.125
2	JS	3	6	2.25	4.5
2	1st HB	2.5	5.0	-	-
12	2nd HB	1	12	-	-
1	RO SYSTEM	1.5	1.5	-	-
2	ICE MAKER	1	3	-	-
2	DISHWASH	1.5	3	1.125	2.25
1	WASH SINK	2	2	1.5	1.5
2	WMB	4	8	3	6
1	EXTRACTOR	22.5	22.5	16.875	16.875
1	DECON	2	2	1.5	1.5
TOTAL FIXTURE UNITS			139.5		54
TOTAL G.P.M.			77		

FIRE STATION FIXTURE UNITS

NUMBER	FIXTURE	CW UNIT	CW TOTAL	HW UNIT	HW TOTAL
8	WC - TANK	2.5	20	-	-
8	L	1	8	.75	6
2	U	4	8	-	-
6	SH	2	12	1.5	9
1	SINK	1	1	.75	.75
1	KS	1.5	1.5	1.125	1.125
1	LS	1.5	1.5	1.125	1.125
1	JS	3	3	2.25	2.25
1	1st HB	2.5	2.5	-	-
6	2nd HB	1	6	-	-
1	RO SYSTEM	1.5	1.5	-	-
1	ICE MAKER	1	2	-	-
2	DISHWASH	1.5	3	1.125	2.25
1	WASH SINK	2	2	1.5	1.5
2	WMB	4	8	3	6
1	EXTRACTOR	22.5	22.5	16.875	16.875
1	DECON	30	30	1.5	1.5
TOTAL FIXTURE UNITS			103		48.375
TOTAL G.P.M.			68		

ADMIN BUILDING FIXTURE UNITS

NUMBER	FIXTURE	CW UNIT	CW TOTAL	HW UNIT	HW TOTAL
3	WC - FVALVE	5	15	-	-
3	L	1	3	.75	2.25
1	U	4	4	-	-
1	KS	1.5	1.5	1.125	1.125
1	JS	3	3	2.25	2.25
1	1st HB	2.5	2.5	-	-
5	2nd HB	1	5	-	-
1	ICE MAKER	1	1	-	-
TOTAL FIXTURE UNITS			35		5.625
TOTAL G.P.M.			44		

VELOCITY FOR COLD WATER PIPING LESS THAN 8 FT. PER SECOND

VELOCITY FOR HOT WATER PIPING LESS THAN 5 FT. PER SECOND

MAXIMUM SIZE FOR HOT WATER PIPING SHALL BE 1-1/2"

GENERAL NOTES

1. THE TOTAL INSTALLATION SHALL COMPLY WITH ANY REQUIREMENTS OF THE LEGALLY CONSTITUTED AUTHORITIES HAVING JURISDICTION INCLUDING 2022 CBC (CALIFORNIA BUILDING CODE), 2022 CAL GREEN REQUIREMENTS AND 2022 CMC/CPC (CALIFORNIA MECHANICAL AND PLUMBING CODE).
2. VISIT THE SITE PRIOR TO BID AND SHALL THOROUGHLY FAMILIARIZE THEMSELVES WITH THE EXISTING CONDITIONS UNDER WHICH THEY WILL BE REQUIRED TO WORK. INDICATED DIMENSIONS ARE APPROXIMATE AND ARE GIVEN FOR ESTIMATE PURPOSES ONLY.
3. CAREFULLY CHECK AND VERIFY DIMENSIONS, SIZES, REQUIRED CLEARANCES AND SHALL ASSUME FULL RESPONSIBILITY FOR THE FITTING OF EQUIPMENT AND MATERIALS HEREIN REQUIRED TO OTHER PARTS OF THE WORK OF OTHER TRADES.
4. THE DRAWINGS ARE ESSENTIALLY DIAGRAMMATIC TO THE EXTENT THAT OFFSETS, BENDS, SPECIAL FITTINGS AND LOCATIONS ARE NOT EXACTLY LOCATED. IN THE PREPARATION OF THESE DOCUMENTS, CERTAIN ASSUMPTIONS ARE MADE REGARDING EXISTING CONDITIONS. SOME OF THESE ASSUMPTIONS MAY NOT BE VERIFIABLE WITHOUT EXPENDING ADDITIONAL SUMS OF MONEY OR DESTROYING OTHERWISE ADEQUATE OR SERVICEABLE PORTIONS OF EXISTING BUILDINGS AND/OR EQUIPMENT. THEREFORE, THE ENGINEER SHALL NOT BE HELD RESPONSIBLE FOR ANY CHANGES OR ADDITIONAL COSTS INCURRED DUE TO EXISTING CONDITIONS.
5. ITEMS RELATED TO PLUMBING UTILITIES AND/OR OTHER SERVICE(S): MATERIALS, LABOR, PERMITS, FEES, ETC., SHALL BE VERIFIED WITH THE RESPECTIVE SERVING UTILITY COMPANY PRIOR TO SUBMISSION OF A BID. THE ACT OF SUBMITTING A BID SHALL CONSTITUTE FULL RESPONSIBILITY OF THE CONTRACTOR TO INSTALL SERVICE(S) IN COMPLIANCE WITH THE REQUIREMENTS OF THE SERVING UTILITY COMPANY AND THE MECHANICAL ENGINEER. THE CONTRACTOR SHALL BE RESPONSIBLE FOR CHARGES LEVIED BY THE SERVING UTILITY COMPANY EXCEPTING THE FIRST BILLING DEPOSIT.
6. COMPLY WITH CONTRACT DOCUMENTS IN LAYING OUT THEIR WORK AND EQUIPMENT. COORDINATE THE WORK OF THIS SECTION WITH THE WORK OF OTHER TRADES AND JOB CONDITIONS.
7. THE INSTALLATION OF ACCESS PANELS OR OTHER INDICATING EQUIPMENT OR SPECIALTIES REQUIRING READING, ADJUSTMENT, INSPECTION, REPAIRS, REMOVAL OR REPLACEMENT SHALL BE CONVENIENTLY LOCATED WITH REFERENCE TO THE FINISHED BUILDING.
8. EQUIPMENT AND FIXTURES INSTALLED UNDER THIS CONTRACT SHALL BE HUNG OR ANCHORED IN ACCORDANCE WITH 2022 CPC/CBC.
9. THE INTENT OF THE DRAWINGS AND SPECIFICATIONS IS TO CONSTRUCT THE PROJECT IN ACCORDANCE WITH TITLE 24, CALIFORNIA CODE OF REGULATIONS.
10. WHERE MATERIAL IS SHOWN ON THE DRAWINGS BUT NOT SPECIFIED, IT SHALL BE OF THE SAME TYPE AND QUALITY AS EXISTING MATERIAL.
11. THE FIRE PROTECTION CONTRACTOR SHALL PROVIDE REQUIRED HYDRAULIC CALCULATIONS AND FIRE SPRINKLER HEAD LOCATION IN ACCORDANCE WITH NFPA 13 TO THE LOCAL FIRE DEPARTMENT FOR REVIEW AND APPROVAL OF THE FIRE PROTECTION SYSTEM.
12. TEST SYSTEM(S) IN ACCORDANCE WITH REQUIREMENTS OF THE GOVERNING AUTHORITIES.
13. CLEANOUTS SHALL BE INSTALLED WHERE READILY ACCESSIBLE AND LOCATED AS PER CODE REQUIREMENTS THE CONTRACTOR SHALL COORDINATE CLEANOUT LOCATIONS WITH EQUIPMENT CABINETS, ETC. AND THE ARCHITECT PRIOR TO ANY INSTALLATION.
14. PAVED AREAS WHICH ARE EXCAVATED AND/OR DAMAGED BY OPERATIONS SHALL BE PATCHED AND REPAIRED. IN ADDITION, RESTORE TO ORIGINAL PLANTED AREAS DAMAGED BY OPERATIONS.
15. CONNECTIONS TO EXISTING SERVICES SHALL BE MADE SUCH THAT INTERRUPTION TIME WILL BE AS SHORT AS POSSIBLE. THE CONTRACTOR SHALL GIVE THE OWNERS REPRESENTATIVE SUFFICIENT NOTICE OF SUCH INTERRUPTIONS AND THE ACTUAL SHUT-DOWN TIME SHALL BE AT A TIME DESIGNATED BY THE OWNERS REPRESENTATIVE.
16. EXTERIOR WATER SHUT-OFF VALVES BELOW GROUND SHALL BE INSTALLED IN YARD BOXES WITH COVERS CONSPICUOUSLY MARKED "WATER SHUT-OFF" RESPECTIVELY.
17. WHEN REQUIRED BY THE AUTHORITY HAVING JURISDICTION, POTABLE WATER SYSTEMS SHALL BE DISINFECTED AND FLUSHED PRIOR TO USE BY WATER-CHLORINATION SOLUTION AND HAVE BACTERIOLOGICAL EXAMINATION MADE BY AN APPROVED AGENCY PER 2022 CPC SEC. 609.10 AND AS PRESCRIBED IN AWWA C651. METHODS OF CLEANING/ DISINFECTING FOR NEW OR REPAIR PIPING AS DESCRIBED IN C651 OR NFPA 24.
18. PLUMBING PIPE, FITTINGS AND FIXTURES USED TO CONVEY OR DISPENSE WATER FOR HUMAN CONSUMPTION SHALL COMPLY WITH AB 1953.
19. ANY SUBSTITUTION MADE THAT IS DIFFERENT FROM WHAT IS SPECIFIED ON THE DRAWINGS SHALL BE CLEARLY INDICATED ON THE SUBMITTAL AS TO THAT IS BEING SUBSTITUTED.
20. SHUT-OFF VALVES SHALL BE PROVIDED IN MAIN BRANCHES, RUNS TO RISERS AND WHERE INDICATED ON DRAWINGS.
21. NEW NON-RESIDENTIAL WATER CLOSETS SHALL COMPLY WITH 2022 CAL-GREEN 5.303.3.1 AND SHALL NOT EXCEED 1.28 GALLONS PER FLUSH. TANK-TYPE WATER CLOSETS SHALL BE CERTIFIED TO THE PERFORMANCE CRITERIA OF THE U.S. EPA WATER SENSE SPECIFICATION FOR TANK-TYPE TOILETS.
22. NEW NON-RESIDENTIAL WALL MOUNTED URINALS SHALL COMPLY WITH 2022 CAL-GREEN 5.303.3.2 AND SHALL NOT EXCEED 0.125 GALLONS PER FLUSH.
23. NEW NON-RESIDENTIAL LAVATORY FAUCETS SHALL COMPLY WITH 2022 CAL-GREEN 5.303.3.4 AND SHALL NOT EXCEED 0.5 GALLONS PER MINUTE AT 60 PSI.
24. NEW NON-RESIDENTIAL SHOWERHEADS SHALL COMPLY WITH 2022 CAL-GREEN 5.303.3.3 AND SHALL NOT EXCEED 1.8 GALLONS PER MINUTE AT 80 PSI.
25. NEW NON-RESIDENTIAL KITCHEN FAUCETS SHALL COMPLY WITH 2022 CAL-GREEN 5.303.3.4 AND SHALL NOT EXCEED 1.8 GALLONS PER MIN AT 60 PSI.

APPLICABLE CODES

1. 2022 BUILDING STANDARDS ADMINISTRATIVE CODE, PART 1, TITLE 24 C.C.R.
2. 2022 CALIFORNIA BUILDING CODE (CBC),PART 2, TITLE 24 C.C.R. (IBC WITH AMENDMENTS)
3. 2022 CALIFORNIA ELECTRICAL CODE (CEC), PART 3, TITLE 24 C.C.R. (NEC WITH AMENDMENTS)
4. 2022 CALIFORNIA MECHANICAL CODE (CMC), PART 4, TITLE 24 C.C.R. (UMC WITH AMENDMENTS)
5. 2022 CALIFORNIA PLUMBING CODE (CPC), PART 5, TITLE 24 C.C.R. (UPC WITH AMENDMENTS)
6. 2022 CALIFORNIA FIRE CODE, PART 9, TITLE 24 C.C.R. (IFC WITH AMENDMENTS)
7. 2022 CALIFORNIA REFERENCED STANDARDS, PART 12, TITLE 24 C.C.R.
8. TITLE 19 C.C.R., PUBLIC SAFETY, STATE FIRE MARSHAL REGULATIONS.
9. 2022 CALIFORNIA ENERGY CODE (PART 6, TITLE 24 C.C.R.)
10. 2022 CALIFORNIA GREEN BUILDING STANDARDS CODE (CGBSG), PART 11, TITLE 24 C.C.R.
11. 2021 INTERNATIONAL BUILDING CODE (IBC)
12. 2021 INTERNATIONAL MECHANICAL CODE (IMC)
13. 2021 INTERNATIONAL PLUMBING CODE (IPC)

PROPANE (LPG) LOAD SCHEDULE

SYMBOL	ITEM	LOCATION	DEMAND (IN CFH)
WH-1	WATER HEATER	JANITOR	150
WH-2	WATER HEATER	UTILITY	150
TD-1	TURNOUT DRYER	UTILTY	130
D-1	DRYER	LAUNDRY	35
D-2	DRYER	UTILTY	35
R-1	RANGE/OVEN	KITCHEN	149
BBQ-1	BARBEQUE	PATIO	40

TOTAL GAS LOAD 689 CFH

LONGEST DEVELOPED PIPE LENGTH (PROPANE PRESSURE @ 10 PSI) <150 FT.

LONGEST DEVELOPED PIPE LENGTH (PROPANE PRESSURE @ 11.0 IN. W.C.) <275 FT.

NOTE: PIPE SIZING TO BE DONE OFF OF THE NATURAL GAS SIZING TABLE 1215.2(1) 2022 CPC USED NATURAL GAS TABLE FOR FUTURE NATURAL GAS CHANGE. PROPANE SIZING WOULD BE SMALLER

PLUMBING LEGEND AND SYMBOLS

SYMBOL	ABBREV.	DESCRIPTION
DETAIL No. / SHEET No.		DETAIL REFERENCE
A / P-1		SECTION REFERENCE
STACK/RISER ID. No.		PLUMBING STACK OR RISER REFERENCE
EQUIPMENT ID. No.		EQUIPMENT REFERENCE
	CW	COLD WATER
	HW	HOT WATER
	HWR	HOT WATER RETURN
	-	POP-OFF DRAIN LINE OR HIDDEN WATER LINE
	S or W	SOIL or WASTE BELOW GRADE (or FLOOR)
GW	GW	GREASE WASTE BELOW GRADE (or FLOOR)
CWV	CWV	COMBINATION WASTE AND VENT
RD/OD	RD/OD	ROOF & OVERFLOW DRAIN ABOVE & BELOW GRADE (or FLOOR)
SD	SD	STORM DRAIN
	S or W	SOIL or WASTE ABOVE GRADE (or FLOOR)
	V	PLUMBING VENT
COND	COND	CONDENSATE DRAIN
G	G	GAS LOW PRESSURE
MPG	MPG	GAS MEDIUM PRESSURE
LPG	LPG	LIQUID PROPANE GAS
AS	AS	AUTOMATIC FIRE SPRINKLER
RW	RW	RECLAIM WATER
CA	CA	COMPRESSED AIR
CA	CAO	COMPRESSED AIR OUTLET
	BV	BALL VALVE
	SOV	SHUT OFF VALVE
	SOV or GC	SHUT OFF VALVE OR GAS COCK ON RISER
	CV	SWING CHECK VALVE
P	PRV	PRESSURE REDUCING VALVE
	PTR	PRESSURE-TEMPERATURE RELIEF VALVE
	RPBFP	REDUCED PRESSURE BACKFLOW PREVENTER
	DN	PIPE DOWN
	UP	PIPE UP
	DN	TEE DOWN
	UP	TEE UP
		PIPE RISER & PIPE DROP (UP AND DOWN)
	FCO	FLOOR CLEANOUT
	WCO	WALL CLEANOUT
	CO	CLEANOUT PLUG
	COTG	YARD CLEANOUT or CLEANOUT TO GRADE
		CAP ON END OF PIPE
	HB	HOSE BIBB WITH VACUUM BREAKER
	WHA & TP	WATER HAMMER ARRESTOR & TRAP PRIMER
	CS	CIRCUIT SETTER
	GR	GAS REGULATOR
	GC	GAS COCK (or GAS STOP)
	GS	GAS SOLENOID
	P.O.C.	POINT OF CONNECTION
	P.O.D.	POINT OF DEMOLITION
	AP	ACCESS PANEL
	ABV	ABOVE
	BEL	BELOW
	AGA	AMERICAN GAS ASSOCIATION
	CONN	CONNECTION
	CONT	CONTINUATION
	(E)	EXISTING
	(N)	NEW
	DN	DOWN
	ADA	AMERICAN DISABILITY ACT
	IE	INVERT ELEVATION
	(TYP)	TYPICAL
	U.O.N.	UNLESS OTHER NOTED
	VTR	VENT THROUGH ROOF
	W/	WITH
	FU	PLUMBING FIXTURE UNIT
	SEC COND	SECONDARY CONDENSATE
	B.F.F.	BELOW FINISH FLOOR
	R.I.C.	ROUGH IN CONNECT

ANCHORAGE AND BRACING NOTES

1. PIPES, DUCTS AND CONDUITS SHALL BE SUPPORTED AND BRACED PER THE SMACNA "GUIDELINES FOR SEISMIC RESTRAINTS OF MECHANICAL SYSTEMS AND PLUMBING SYSTEMS", THE "SUPERSTRUT SEISMIC RESTRAINT SYSTEM" FOR PIPES AND CONDUITS ONLY.

SHEET INDEX

SHEET NUMBER	SHEET TITLE
P0.1	PLUMBING LEGENDS & NOTES
P0.2	PLUMBING SCHEDULES
P1.0	PLUMBING SITE PLAN
P2.1	PLUMBING FLOOR PLAN - WASTE & VENT ADMIN BLDG
P2.2	PLUMBING FLOOR PLAN - COLD & HOT WATER ADMIN BLDG
P3.1A	PLUMBING FLOOR PLAN - ENLARGED WASTE & VENT SEG A - FIRE STATION
P3.1B	PLUMBING FLOOR PLAN - ENLARGED WASTE & VENT SEG B - FIRE STATION
P3.2A	PLUMBING FLOOR PLAN - ENLARGED CW&HW WATER SEG A - FIRE STATION
P3.2B	PLUMBING FLOOR PLAN - ENLARGED CW&HW WATER SEG B - FIRE STATION
P4.1	PLUMBING DETAILS

STK ARCHITECTS, INC.
42095 ZEVO DR., TEMECULA, CALIFORNIA 92590-3780
Phone: 951.296.8110 Fax: 951.296.8079 Email: stk@stkinc.com

CONSULTANT:

REVIEWED FOR CODE COMPLIANCE

THESE PLANS AND DOCUMENTS MAY BE REVIEWED AND FOUND TO BE IN SUBSTANTIAL COMPLIANCE WITH THE CODES APPLICABL

NOTES
■ IN COMPLIANCE WITH UNIFORM PLUMBING CODE (UPC), INTERNATIONAL PLUMBING CODE (IPC), AND STRUCTURAL LOADING REQUIREMENTS OF ASTM INTERNATIONAL
■ JENSEN PRECAST'S PRODUCT IS LISTED BY IAPMO R&T TO STANDARD PS 80. MODEL: CL-1200
■ MINIMUM ONE (1) ACCESS OPENING PER COMPARTMENT REQUIRED (AS SHOWN).
■ MUST BE INSTALLED PER "JENSEN PRECAST UNDERGROUND WASTEWATER PRECAST CONCRETE TANK INSTALLATION PROCEDURE" WHICH CAN BE FOUND AT https://www.jensenprecast.com/Tank-Installation-Procedure-d2106.pdf. THIS PROCEDURE ADDRESSES REQUIRED EXCAVATION, SITE PREPARATION, INSTALLATION, VENTILATION, AND WATER/VACCUM TESTING

BILL OF MATERIALS

ITEM	QTY	PART NUMBER	DESCRIPTION	WEIGHT (LBS)
1	1	200029091	Tank JP 1200 Gallon 6 Inch Assembly ECE Double Baffle	15364
2	1	200048873	200030678 Plumbing - JP 1200 4 Inch Clarifier 24"E, 24"C, 24"E Double Baffle	2
3	JOB SPECIFIC	100005850	CI RINGCOVER 24DIA B-5105-02/B-5105-R2 ASTM A48 CL35B CP O-RING GASKET OSI JENSEN/INTERCEPT	196
4	JOB SPECIFIC	100001524	Grade Ring D2432x3	87
5	JOB SPECIFIC	100001525	Grade Ring D2432x6	180
6	JOB SPECIFIC	100001526	Grade Ring D2432x12	365
7	JOB SPECIFIC	100012046	Plug Cover D2428x6 Slab Top	300

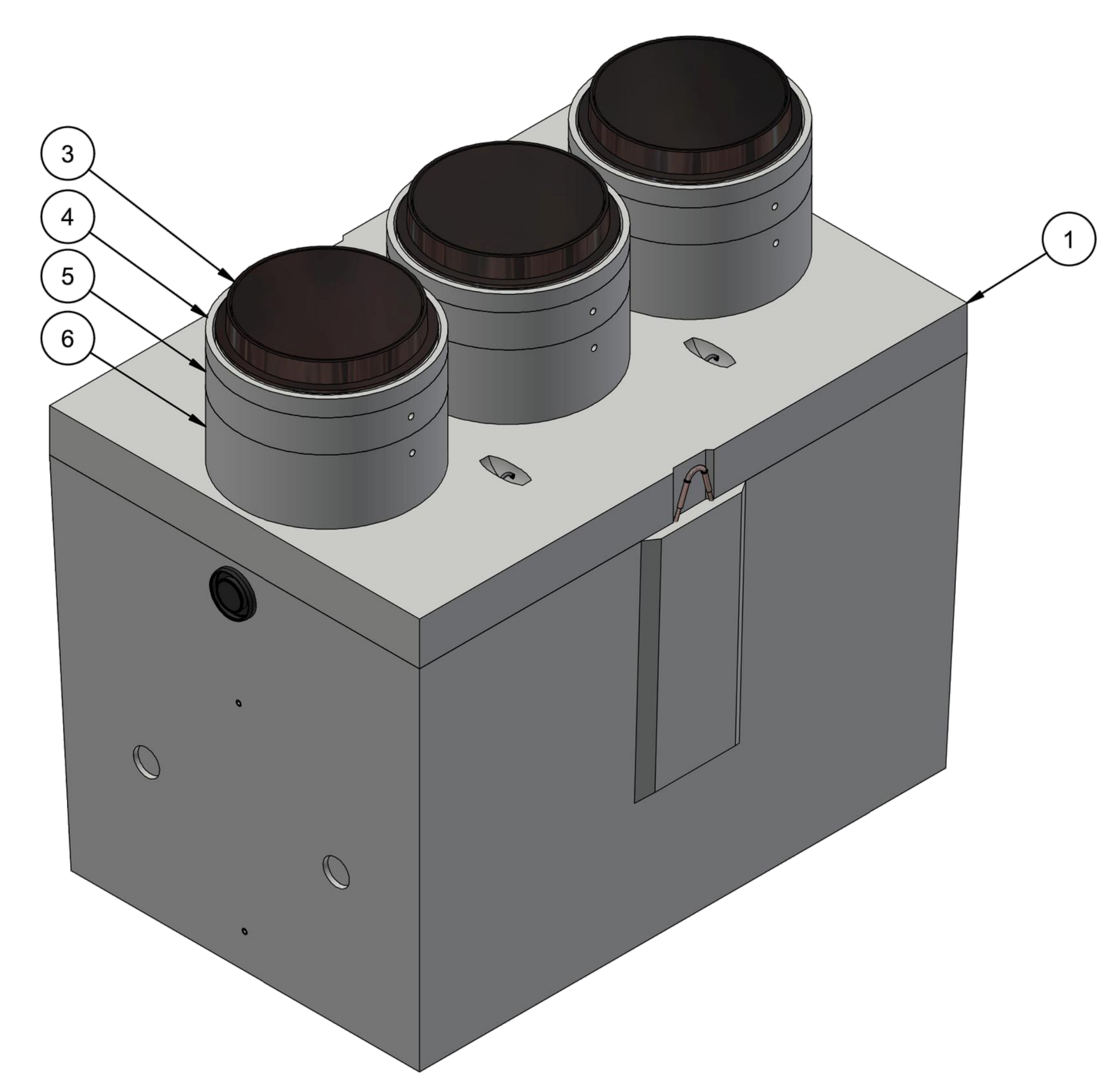

ISO LAYOUT

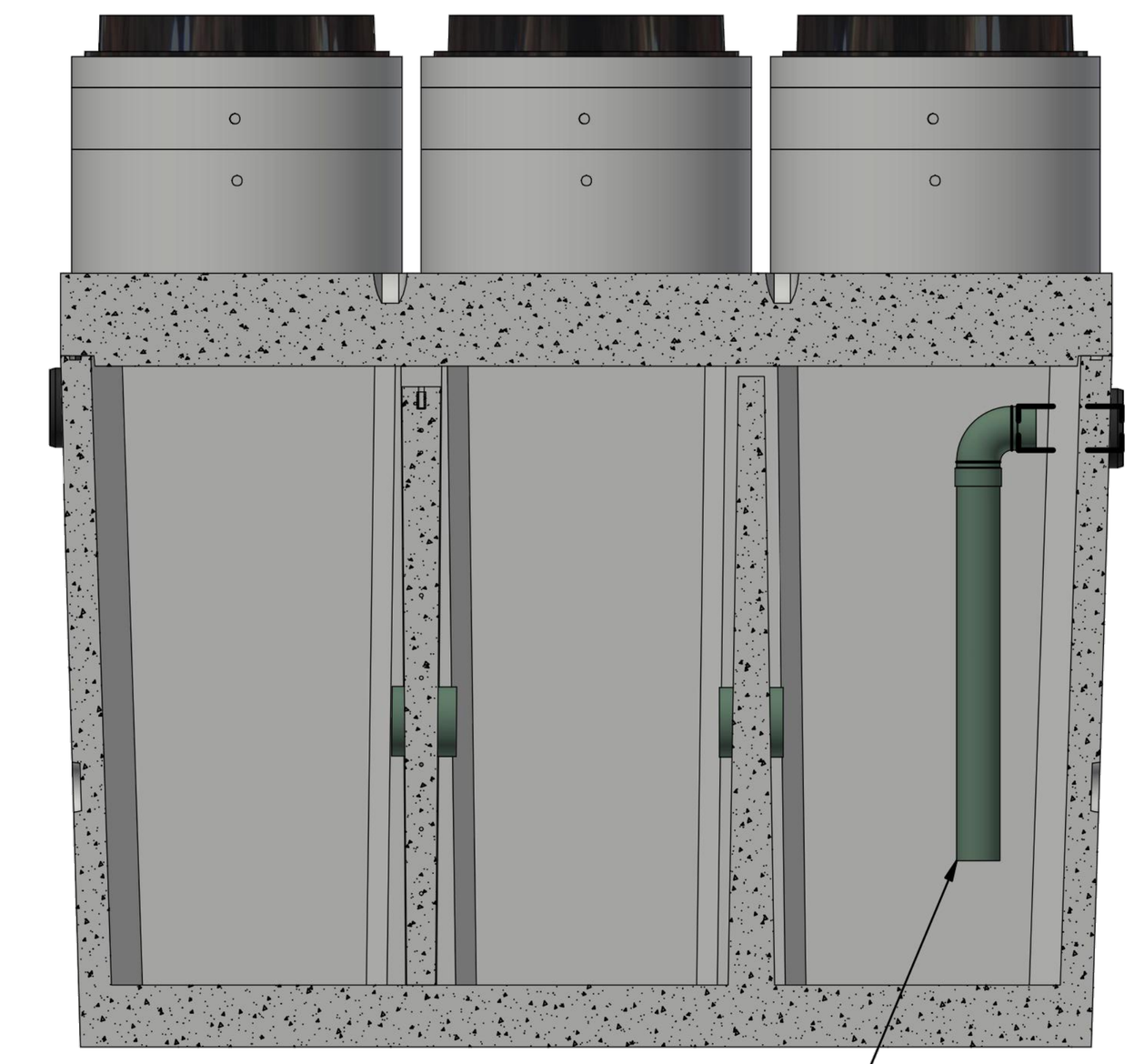

SECTION

REVISION HISTORY

REV	DESCRIPTION	DATE	BY
A	DRAWING CREATED	10/8/2019	T.Larson
B	TOP SLAB LIFTING AND PLUMBING UPDATED	2/9/2021	T.Larson
C	ACCESSORIES UPDATED	7/6/2022	E.FINE

MODEL: CL-1200

BURY DEPTH:	1.1' - 6.0' to Top		
WATER LEVEL:	Below Structure	WEIGHT:	18151.01 Lbs
DESIGN SPEC:	ASTM C890,ACI 318	LOADING SPEC:	A-16 (AASHTO HS20-44)
REINFORCEMENT TYPE:		LIFTING TYPE:	

JENSEN PRECAST EST. 1968 WWW.JENSENPRECAST.COM

©2018 Jensen Precast- All rights reserved. All materials appearing as Jensen Precast documents and the like are proprietary work product and are protected under U.S. copyright and other laws. Unless in conjunction with business conducted with Jensen Precast, any use of Jensen Precast work product without express, written consent is prohibited, and recipient is prohibited from distributing any and all work product to non-approved third parties under penalty of civil action.

DESCRIPTION: Tank JP 1200 Gallon 4 Inch Layout Clarifier 24"E, 24"C, 24"E Double Baffle
LAYOUT REVIEW
REV: C-4
PART NUMBER: 200030678 | DRAWN BY: E. Fine | SHEET: 1 OF 2
CREATED: 1/31/2019 | MODIFIED: 7/7/2022

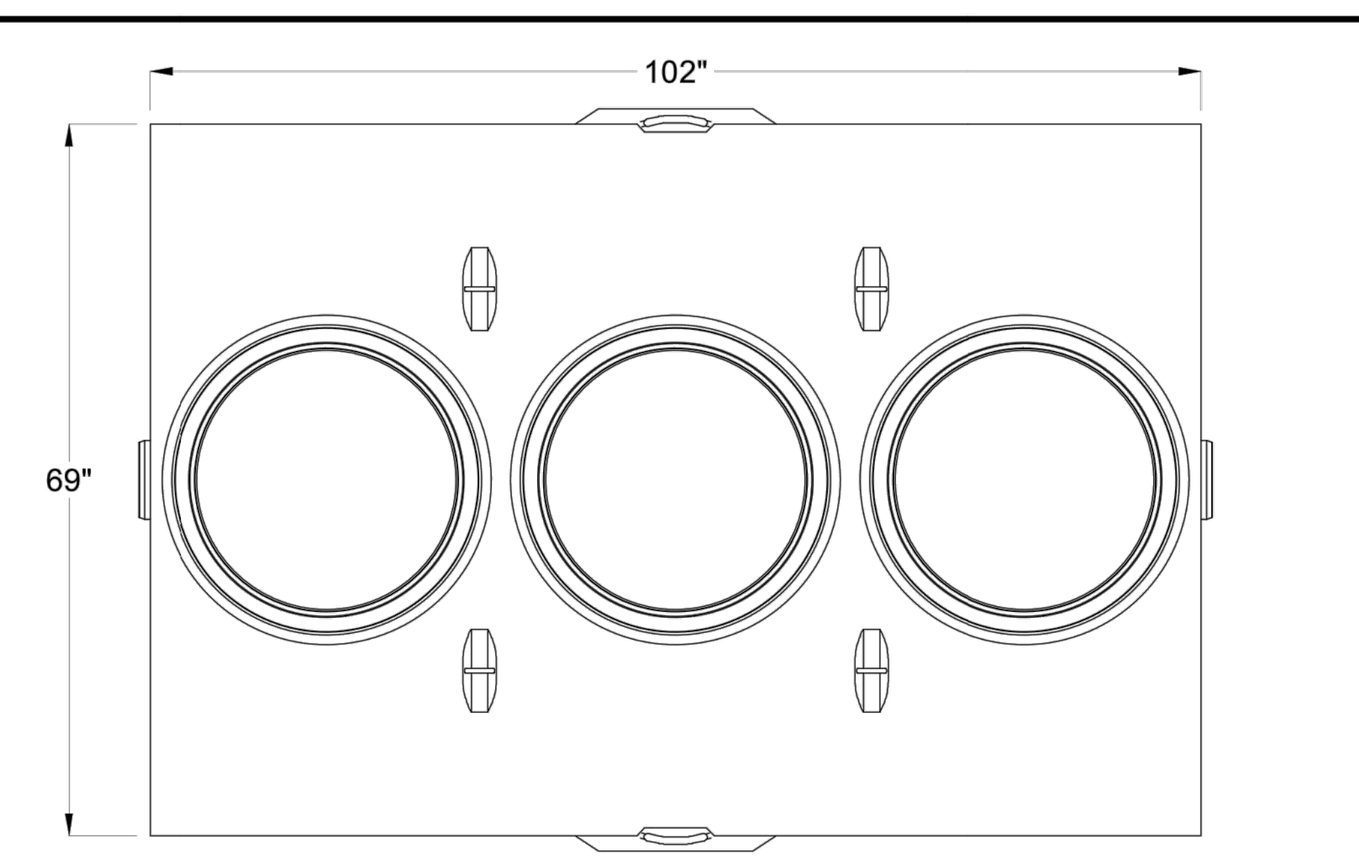

PLAN VIEW

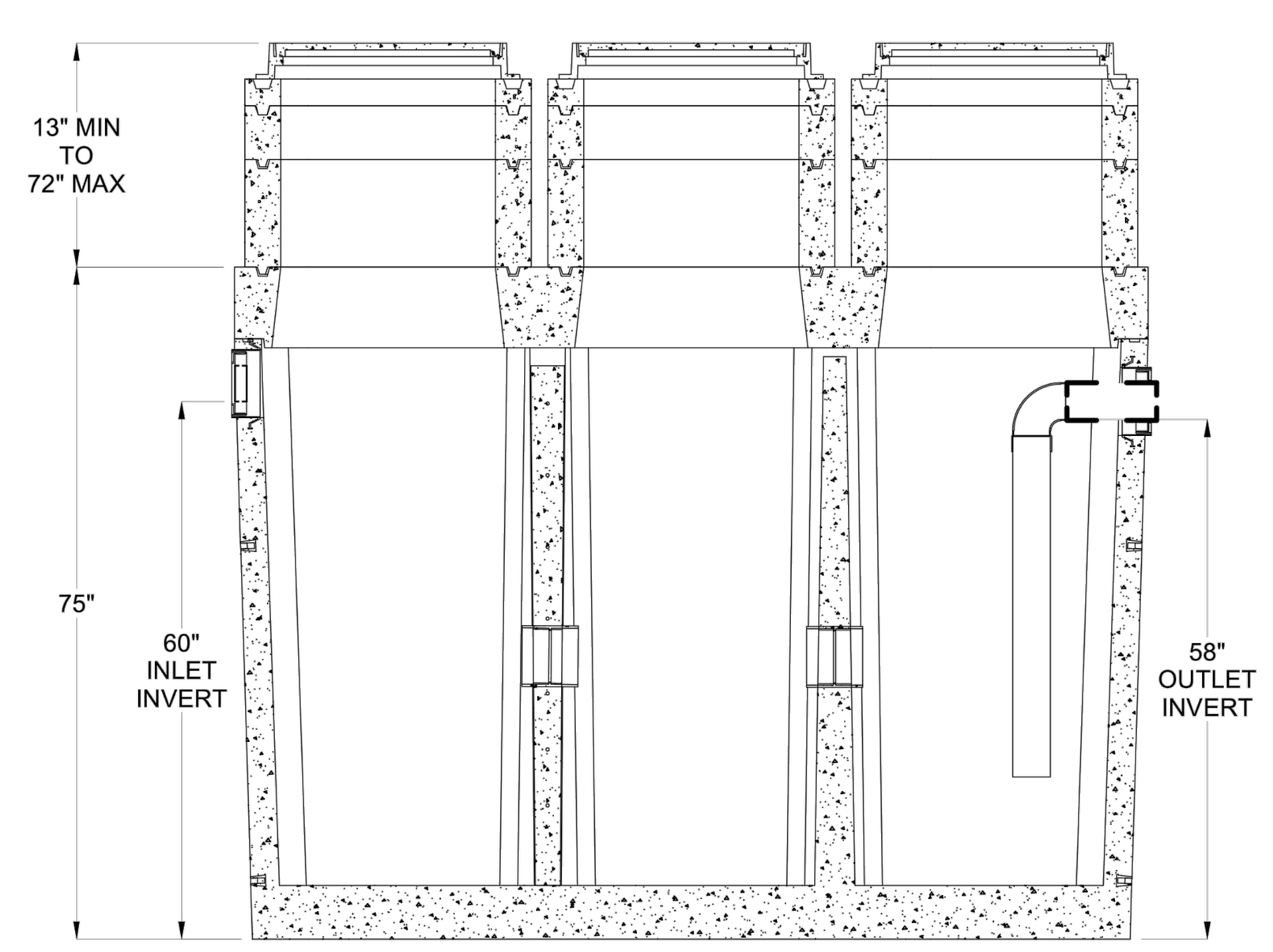

CROSS SECTION

BURY DEPTH:	1.1' - 6.0' to Top		
WATER LEVEL:	Below Structure	WEIGHT:	18151.01 Lbs
DESIGN SPEC:	ASTM C890,ACI 318	LOADING SPEC:	A-16 (AASHTO HS20-44)
REINFORCEMENT TYPE:		LIFTING TYPE:	

JENSEN PRECAST EST. 1968 WWW.JENSENPRECAST.COM

DESCRIPTION: Tank JP 1200 Gallon 4 Inch Layout Clarifier 24"E, 24"C, 24"E Double Baffle
LAYOUT DRAWING
REV: C-4
PART NUMBER: 200030678 | DRAWN BY: E. Fine | SHEET: 2 OF 2
CREATED: 1/31/2019 | MODIFIED: 7/7/2022

ARCHITECT SPECIFIED FIXTURE

(REFER TO ARCHITECTURAL DRAWINGS FOR ADDITIONAL INFORMATION - CONTRACTOR PURCHASE AND INSTALLATION)

DESCRIPTION	MANUFACTURER / MODEL	WASTE	TRAP	VENT	CW	HW	REMARKS
REVERSE OSMOSIS SYSTEM (A-9)	CULLIGAN - LCRO-100 AC. 100 GPD	2"	2"	1-1/2"	3/4"	-	INDIRECT WASTE
ICE MAKER - ON REVERSE OSMOSIS SYSTEM (A-6)	SCOTSMAN - CU0515 70 LB ICE MACHINE	-	-	-	1/2"	-	INDIRECT WASTE SHARED WITH RO; WATER LINE FROM RO
COFFEE BREWER - ON REVERSE OSMOSIS SYSTEM (A-8)	BUNN - AXIOM-15-3 QW CUP AUTOMATIC COFFEE BREWER	-	-	-	1/2"	-	INDIRECT WASTE SHARED WITH SINK; WATER LINE FROM RO
BEVERAGE SINK - (11)	SEE ARCHITECTURAL PLANS	2"	2"	1-1/2"	3/4"	3/4"	INDIRECT WASTE
TWO COMPARTMENT KITCHEN SINK - (1)	SEE ARCHITECTURAL PLANS	2"	2"	1-1/2"	3/4"	3/4"	INDIRECT WASTE
DISH WASHER (x2) (A-3)	BOSCH - 500 SERIES - SHX65DM5N	-	-	-	3/4"	3/4"	INDIRECT WASTE SHARED WITH SINK; WATER LINE FROM SINK
ICE MAKER - BAY AREA (15)	SEE ARCHITECTURAL PLANS	2"	2"	1-1/2"	3/4"	-	INDIRECT WASTE SHARED WITH SINK; WATER LINE FROM SINK
WASHING MACHINE (x2) (16)	LG - WT7005CW	-	-	-	-	-	CONNECT TO - WMB 1
DRYER (x2) (17)	LG - DLG7001W	-	-	-	-	-	SEE LPG LOAD SCHEDULE
EXTRACTOR WASHER (18)	CIRCUL AIR CORP - CACSHD-70	3"	3"	2"	1-1/4"	1-1/4"	DISCHARGE IN 3" STANDPIPE
TURNOUT GEAR TUMBLE DRYER (19)	CIRCUL AIR CORP - CACTD-75-85	-	-	-	-	-	SEE LPG LOAD SCHEDULE

WATER HEATER SCHEDULE

SYMBOL	MANUFACTURER	MODEL	INPUT RATING	CAPACITY	RECOVERY	THERMAL EFFICIENCY	ELECTRICAL	WEIGHT	LOCATION	REMARKS
WH 1	A.O. SMITH	BTH-150	150,000 BTU/H	100 GALLONS	223 GAL./HR. @ 80 DEG. TEMP. RISE	98%	120V-1Ø-60~ 5 AMPS	553 LBS. (DRY) 1,355 LBS. (OPERATING)	JANITOR FIRE STATION	(1)(2)
WH 2	A.O. SMITH	BTH-150	150,000 BTU/H	100 GALLONS	223 GAL./HR. @ 80 DEG. TEMP. RISE	98%	120V-1Ø-60~ 5 AMPS	553 LBS. (DRY) 1,355 LBS. (OPERATING)	UTILITY FIRE STATION	(1)(2)
WH 3	A.O. SMITH	EJC-6	-	6 GALLONS	8 GAL./HR. @ 90 DEG. TEMP. RISE	93%	1,650 WATTS 120V-1Ø-60	35 LBS. (DRY) 86 LBS. (OPERATING)	JANITOR ADMIN BUILDING	
WH 4	CHRONOMITE	CM-20L/208	-	INSTANT TANKLESS	57 DEG. TEMP. RISE @ 0.5 GPM	-	4,160 WATTS 20 AMPS 208V-1Ø-60	5 LBS.	MENS RESTROOM ADMIN BUILDING	(3)
WH 5	CHRONOMITE	CM-20L/208	-	INSTANT TANKLESS	57 DEG. TEMP. RISE @ 0.5 GPM	-	4,160 WATTS 20 AMPS 208V-1Ø-60	5 LBS.	WOMENS RESTROOM ADMIN BUILDING	(3)
WH 6	CHRONOMITE	CM-20L/208	-	INSTANT TANKLESS	57 DEG. TEMP. RISE @ 0.5 GPM	-	4,160 WATTS 20 AMPS 208V-1Ø-60	5 LBS.	RESTROOM ADMIN BUILDING	(3)
WH 7	CHRONOMITE	CM-40L/208	-	INSTANT TANKLESS	57 DEG. TEMP. RISE @ 1.0 GPM	-	8,320 WATTS 40 AMPS 208V-1Ø-60	5 LBS.	BREAK ROOM ADMIN BUILDING	(3)

NOTES: (1) W/ CONCENTRIC VENT AND CONDENSATE NEUTRALIZATION KIT (2) MOUNT WATER HEATER ON HOLDRITE QUICKSTAND #40-S-30 - 16" HEIGHT (3) W/ 2095-1 DISCONNECT SWITCH

CIRCULATING PUMP SCHEDULE

SYMBOL	SYSTEM	MANUFACTURER	MODEL	CAPACITY	CONSTRUCTION	MOTOR	ELECTRICAL	WEIGHT	ACCESSORIES
CP 1	WH-1	TACO	007-SF5	5 GPM @ 9'TDH	STAINLESS STEEL	1/25 HP 3,250 RPM	120V-1ph-60~ 0.76 AMPS	7 LBS	(1)

(1) WITH TACO #563-2 AQUASTAT

EXPANSION TANK SCHEDULE

SYMBOL	MANUFACTURER	MODEL	TANK VOLUME	AIR PRE-CHARGE	ACCEPTANCE VOLUME	WEIGHT	ACCESSORIES
ET 1	WATTS	PLT-12	5 GALLONS	20 PSI	3.42 GALLONS	51.7 LBS	(1)(2)
ET 2	WATTS	PLT-12	5 GALLONS	20 PSI	3.42 GALLONS	51.7 LBS	(1)(2)

NOTES: (1) WEIGHT INCLUDES EQUIPMENT AND WATER CAPACITY (2) HOLDRITE QS-U QUICK STRAP MOUNTING BRACKET

EXPANSION TANK SIZING SCHEDULE

Expansion Tank Sizing Chart

Assumed 140 Degree Maximum Temperature and 150 PSI Maximum Pressure Expansion Tank Needed

Water Heater Capacity (gallons)

Incoming Water Pressure	30	40	50	66	80	100	120
40 psi	2 GAL	2 GAL	2 GAL	2 GAL	5 GAL	5 GAL	5 GAL
50 psi	2 GAL	2 GAL	2 GAL	2 GAL	5 GAL	5 GAL	5 GAL
60 psi	2 GAL	2 GAL	2 GAL	2 GAL	5 GAL	5 GAL	5 GAL
70 psi*	2 GAL	2 GAL	2 GAL	2 GAL	5 GAL	5 GAL	5 GAL
80 psi*	2 GAL	2 GAL	2 GAL	2 GAL	5 GAL	5 GAL	5 GAL

Use a pressure reducing valve for regulating inlet pressure at 60 psi

CLARIFIER SCHEDULE

SYMBOL	MANUFACTURER	MODEL	CAPACITY	OPTIONS
CL 1	JENSEN PRECAST	CL-1200	1,200 GALLONS	W/ TRAFFIC RATED LIDS AND RISER RINGS AS REQ'D TO FLUSH W/ GRADE INSPECTION STATION

CHECK VALVE SCHEDULE

SYMBOL	MANUFACTURER	MODEL	SIZE	CONSTRUCTION	WEIGHT (LBS)	REMARKS
CV 1	ZURN	700XL	3/4"	CAST BRONZE	2	SERVES RO SYSTEM
CV 2	ZURN	700XL	1/2"	CAST BRONZE	2	SERVES ICE MAKER APPARATUS BAY
CV 3	ZURN	700XL	1/2"	CAST BRONZE	2	SERVES ICE MAKER ADMIN BUILDING

AIR COMPRESSOR SCHEDULE

SYMBOL	MANUFACTURER & MODEL NO.	LOCATION	CAPACITY	MOTOR (HP)	ELECTRICAL	DIMENSIONS	WEIGHT
AC 1	INGERSOLL RAND 2475N7.5	UTILITY	80 GALLONS, 24.3 CFM, & MAX 175 PSI	7.5	480V-3Ø-60	28" L x 38" W x 69 H	611 LBS

STK ARCHITECTURE, INC.
42095 ZEVO DR., TEMECULA, CALIFORNIA 92590-3780
Phone: 951.296.9110 Fax: 951.296.6079 Email: stk@stkinc.com

CONSULTANT:
DESIGN WEST ENGINEERING
MECHANICAL • ELECTRICAL • ENERGY CONSULTANTS
Email: code@designwesteng.com

REVIEWED FOR CODE COMPLIANCE
BUILDING BUREAU SOLUTIONS INC.

REGISTERED PROFESSIONAL ENGINEER STEVEN M. JOHNSON No. 33209 SIGNED:04/14/2026 MECHANICAL STATE OF CALIFORNIA

PROJECT ADMINISTERED BY:
CITY OF PERRIS

101 NORTH "D" STREET
PERRIS, CA 92570

PROJECT NAME:
SOUTH FIRE STATION AND ADMINISTRATIVE BUILDING

PROJECT CIP: F077

2495 MURRIETA ROAD
PERRIS, CA 92585

ISSUE INFORMATION:

DATE:	INFORMATION:
11-26-25	95% CD SUBMITTAL
02-05-26	(1) 1st PC RESPONSE
02-19-26	(2) 2nd PC RESPONSE

SHEET INFORMATION:
STK PROJECT NO.: 365-03-25
SCALE: AS NOTED
DATE: NOVEMBER 2025
PLOT DATE: –
DRAWN BY: JG / JW

SEAL:

SHEET TITLE:
PLUMBING SCHEDULES

SHEET NO.:
P0.2

GENERAL NOTES

1. FOR LINE TYPES, SYMBOLS & ABBREVIATIONS SEE LEGEND ON P0.1.
2. ALL VENTING SHALL HAVE A MIN. OF 10' CLEARANCE FROM ANY FORCED AIR INLET W/ A MIN. OF 3' CLEARANCE ABOVE & A MIN OF 4' CLEARANCE FROM ANY PROPERTY LINE EXCEPT A PUBLIC WAY PER CPC SEC. 906.
3. ROOF DRAIN & PIPES ARE BASED ON TABLE 1103.2 @ 3" OF RAIN FALL PER HOUR W/ 1/8" PIPE SLOPE
4. COORDINATE EXACT LOCATION OF S.O.V., BACKFLOW DEVICE, WATER METER, GAS METER & GREASE INTERCEPTOR WITH ARCHITECT.
5. FOR ALL PIPING BEYOND 5' OF THE BUILDING, REFER TO CIVIL DRAWINGS

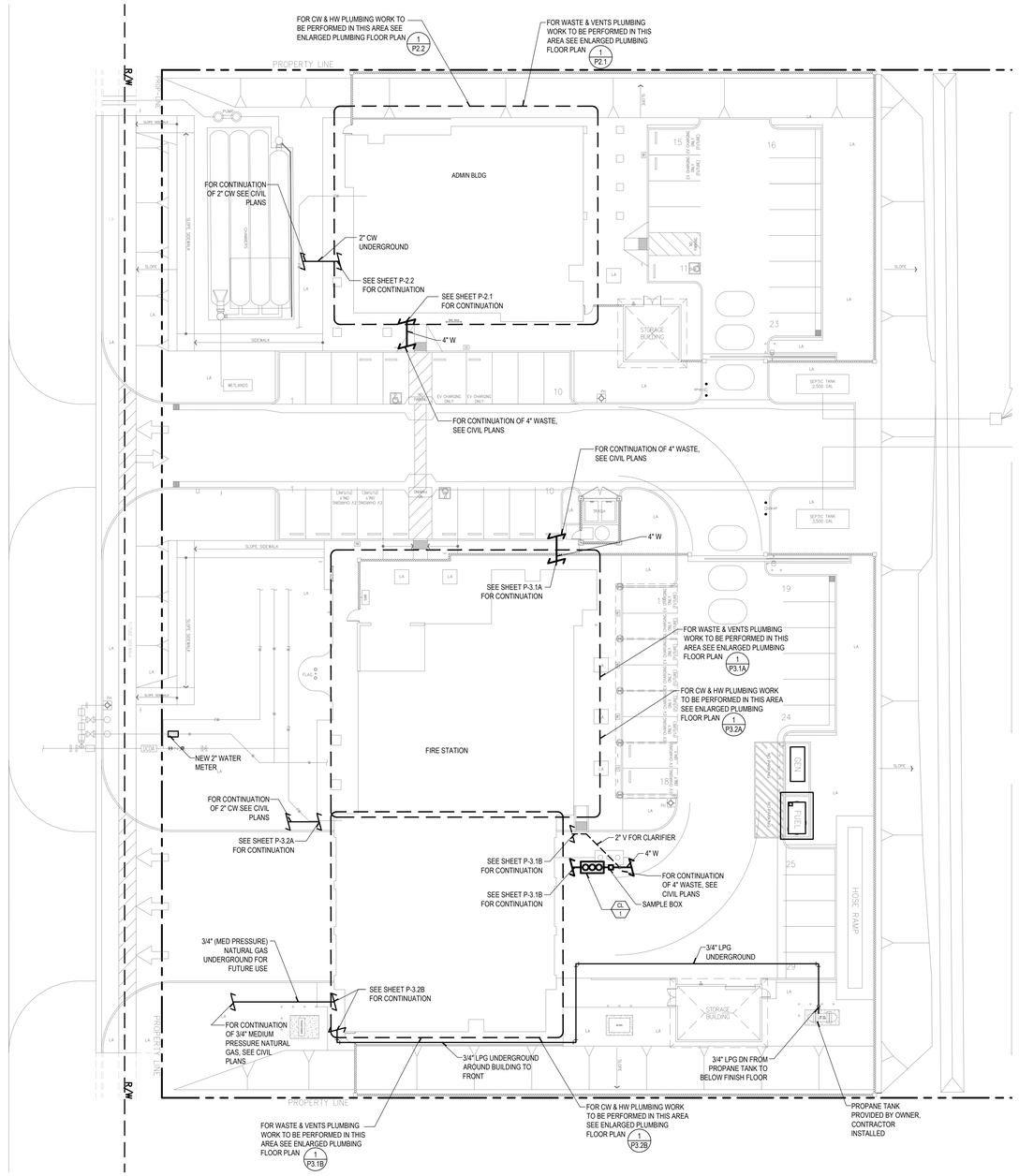

PLUMBING SITE PLAN | SCALE: 1"=20'-0" | 1

STK ARCHITECTURE, INC.
42095 ZEVO DR., TEMECULA, CALIFORNIA 92590-3780
Phone: 951.296.9110 Fax: 951.296.6079 Email: stk@stkinc.com

CONSULTANT:

REVIEWED FOR CODE COMPLIANCE

THESE DESIGN DOCUMENTS SHALL BE REVIEWED AND FOUND TO BE IN SUBSTANTIAL COMPLIANCE WITH THE APPROVED PLANS PRIOR TO START OF CONSTRUCTION. THESE DOCUMENTS ARE SUBJECT TO FIELD INSPECTIONS AND APPROVALS AS REQUIRED BY THE CODE OFFICIAL. THE CONTRACTOR IS RESPONSIBLE FOR THE CONSTRUCTION OF THE PROJECT IN ACCORDANCE WITH THE APPROVED PLANS AND SPECIFICATIONS. IT SHALL BE THE RESPONSIBILITY OF THE CONTRACTOR TO ENSURE THAT CHANGES MADE DURING CONSTRUCTION ARE REVIEWED BY THE CODE OFFICIAL. CONTACT (951) 443-1029 OR EMAIL DWEST@DESIGNWESTENG.COM TO SCHEDULE INSPECTIONS.
BUILDING DEPARTMENT
CITY OF PERRIS

DESIGN WEST ENGINEERING
MECHANICAL / ELECTRICAL / ENERGY CONSULTANTS
DEPARTMENT
BUILDING ENERGY SOLUTIONS INC.

REGISTERED PROFESSIONAL ENGINEER
Stephen Mahanian
No. 33209
SIGNED:05/01/2026
MECHANICAL
STATE OF CALIFORNIA

PROJECT ADMINISTERED BY:

CITY OF PERRIS

101 NORTH "D" STREET
PERRIS, CA 92570

PROJECT NAME:

SOUTH FIRE STATION AND ADMINISTRATIVE BUILDING

PROJECT CIP: F077

2495 MURRIETA ROAD
PERRIS, CA 92585

ISSUE INFORMATION:

DATE:	INFORMATION:
11-25-25	95% CD SUBMITTAL
02-05-26	1 1st PC RESPONSE
02-19-26	2 2nd PC RESPONSE
04-27-26	4 4th PC RESPONSE

SHEET INFORMATION:

STK PROJECT NO.: 365-03-25
SCALE: AS NOTED
DATE: NOVEMBER 2025
PLOT DATE: –
DRAWN BY: JG / JW

SEAL:

SHEET TITLE:

PLUMBING SITE PLAN

SHEET NO.:

P1.0

25-114

05/01/2026 12:42PM
R:_PROJECTS\2025\25-114 perris fire station (CAD)\25-114 P-SitePln.dwg

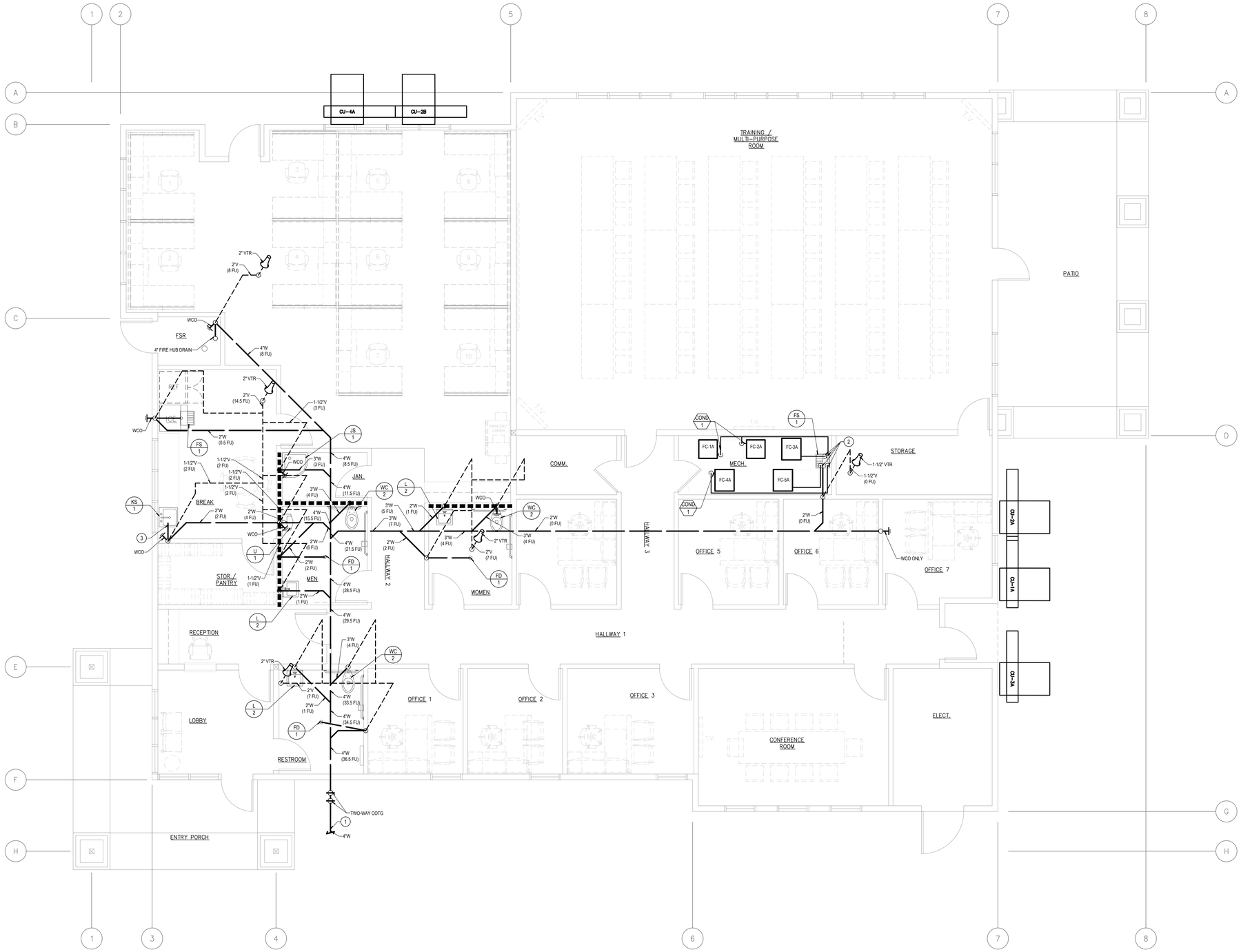

GENERAL NOTES

1. FOR LINE TYPES, SYMBOLS & ABBREVIATIONS SEE LEGEND ON P0.1.
2. ALL WASTE LINES INSIDE THE BUILDING SHALL BE SLOPED AT 2% SLOPE.
3. ALL WASTE LINES OUTSIDE THE BUILDING SHALL BE SLOPED AT 1% SLOPE UNLESS NOTED OTHERWISE ON CIVIL DRAWINGS.
4. ALL CONDENSATE LINES INSIDE THE BUILDING SHALL BE SLOPED AT 1% SLOPE.
5. CONDENSATE DRAIN LINES SHALL BE CONFIGURED OR PROVIDED WITH A CLEANOUT TO PERMIT THE CLEARING OF BLOCKAGES AND FOR MAINTENANCE WITHOUT REQUIRING THE DRAIN LINE TO BE CUT. (CPC 814.3.1)
6. ALL VENTING SHALL HAVE A MIN. OF 10' CLEARANCE FROM ANY FORCED AIR INLET W/ A MIN. OF 3' CLEARANCE ABOVE & A MIN OF 4' CLEARANCE FROM ANY PROPERTY LINE EXCEPT A PUBLIC WAY PER CPC SEC. 906.
7. ROOF DRAIN & PIPES ARE BASED ON TABLE 1103.2 @ 3" OF RAIN FALL PER HOUR W/ 1/8" PIPE SLOPE.

CONSTRUCTION NOTES

1. FOR CONTINUATION OF 4" WASTE SEE SHEET P1.0
2. CONDENSATE DOWN TO TERMINATE INTO FLOOR SINK WITH A 1" AIR GAP ABOVE RIM
3. TRAP ARM TO KS-1 TO BE CONNECTED FROM SIDE WALL

STK ARCHITECTURE, INC.
42095 ZEVO DR., TEMECULA, CALIFORNIA 92590-3780
Phone: 951.296.9110 Fax: 951.296.6079 Email: stk@stknc.com

CONSULTANT:

REVIEWED FOR CODE COMPLIANCE

DESIGN WEST ENGINEERING
MECHANICAL • ELECTRICAL • ENERGY CONSULTANTS
BUILDING BUREAU SOLUTIONS INC.

REGISTERED PROFESSIONAL ENGINEER
No. 33209
SIGNED:04/14/2026
MECHANICAL
STATE OF CALIFORNIA

PROJECT ADMINISTERED BY:
CITY OF PERRIS

101 NORTH "D" STREET
PERRIS, CA 92570

PROJECT NAME:
SOUTH FIRE STATION AND ADMINISTRATIVE BUILDING

PROJECT CIP: F077

2495 MURRIETA ROAD
PERRIS, CA 92585

ISSUE INFORMATION:

DATE:	INFORMATION:
11-26-25	95% CD SUBMITTAL
02-05-26	1st PC RESPONSE
02-19-26	2nd PC RESPONSE

SHEET INFORMATION:

STK PROJECT NO.: 365-03-25
SCALE: AS NOTED
DATE: NOVEMBER 2025
PLOT DATE: –
DRAWN BY: JG / JW

SEAL:

SHEET TITLE:
PLUMBING FLOOR PLAN - WASTE & VENT ADMIN BLDG

SHEET NO.:
P2.1

PLUMBING FLOOR PLAN - WASTE & VENT ADMIN BLDG | SCALE: 1/4" = 1'-0" | 1

25-114



GENERAL NOTES

1. FOR LINE TYPES, SYMBOLS & ABBREVIATIONS SEE LEGEND ON P0.1.
2. HOT WATER & DRAIN PIPES UNDER ACCESSIBLE LAV. SHALL BE INSULATED OR OTHERWISE COVERED.
3. ROUTE HOT WATER LOOP AS CLOSE AS POSSIBLE TO ALL FIXTURES.
4. COORDINATE EXACT LOCATION OF S.O.V., BACKFLOW DEVICE, WATER METER, GAS METER & GREASE INTERCEPTOR WITH ARCHITECT.
5. SHUT-OFF VALVES SHALL BE PROVIDED ON ALL MAIN BRANCHES, RUNS TO RISERS AND WHERE SHOWN ON DRAWING. LOCATE SHUT-OFF VALVES OVER T-BAR CEILING WHEN POSSIBLE. PROVIDE ACCESS PANELS WHEN SHUT-OFF VALVES ARE LOCATED OVER HARD LID CEILINGS.

CONSTRUCTION NOTES

1. 2" CW RISER & APPROVED 2-1/2" CW S.O.V. IN CONC. YARDBOX SEE DETAIL
2. 3/4" HW & CW TO WATER HEATER
3. 3/4" CW & HW DOWN TO FIXTURE
4. 3/4" CW DOWN TO FIXTURE
5. 1-1/2" CW DOWN TO FIXTURE
6. 1-1/2" CW DN IN WALL TO FULL SIZE HEADER

STK ARCHITECTURE, INC.
42095 ZEVO DR., TEMECULA, CALIFORNIA 92590-3780
Phone: 951.296.9110 Fax: 951.296.6079 Email: stk@stknc.com

CONSULTANT:

REVIEWED FOR CODE COMPLIANCE

DESIGN WEST ENGINEERING
MECHANICAL • ELECTRICAL • ENERGY CONSULTANTS
BUILDING BUREAU SOLUTIONS INC.

REGISTERED PROFESSIONAL ENGINEER
No. 33209
SIGNED 04/14/2026
MECHANICAL
STATE OF CALIFORNIA

PROJECT ADMINISTERED BY:
CITY OF PERRIS

101 NORTH "D" STREET
PERRIS, CA 92570

PROJECT NAME:
SOUTH FIRE STATION AND ADMINISTRATIVE BUILDING

PROJECT CIP: F077

2495 MURRIETA ROAD
PERRIS, CA 92585

ISSUE INFORMATION:

DATE:	INFORMATION:
11-26-25	95% CD SUBMITTAL
02-05-26	1st PC RESPONSE
02-19-26	2nd PC RESPONSE

SHEET INFORMATION:

STK PROJECT NO.: 365-03-25
SCALE: AS NOTED
DATE: NOVEMBER 2025
PLOT DATE: –
DRAWN BY: JG / JW

SEAL:

SHEET TITLE:
PLUMBING FLOOR PLAN - COLD & HOT WATER ADMIN BLDG

SHEET NO.:
P2.2

PLUMBING FLOOR PLAN - COLD & HOT WATER ADMIN BLDG | SCALE: 1/4" = 1'-0" | 1

25-114



GENERAL NOTES

1. FOR LINE TYPES, SYMBOLS & ABBREVIATIONS SEE LEGEND ON P0.1.
2. ALL WASTE LINES INSIDE THE BUILDING SHALL BE SLOPED AT 2% SLOPE.
3. ALL WASTE LINES OUTSIDE THE BUILDING SHALL BE SLOPED AT 1% SLOPE UNLESS NOTED OTHERWISE ON CIVIL DRAWINGS.
4. ALL CONDENSATE LINES INSIDE THE BUILDING SHALL BE SLOPED AT 1% SLOPE.
5. CONDENSATE DRAIN LINES SHALL BE CONFIGURED OR PROVIDED WITH A CLEANOUT TO PERMIT THE CLEARING OF BLOCKAGES AND FOR MAINTENANCE WITHOUT REQUIRING THE DRAIN LINE TO BE CUT. (CPC 814.3.1)
6. ALL VENTING SHALL HAVE A MIN. OF 10' CLEARANCE FROM ANY FORCED AIR INLET W/ A MIN. OF 3' CLEARANCE ABOVE & A MIN OF 4' CLEARANCE FROM ANY PROPERTY LINE EXCEPT A PUBLIC WAY PER CPC SEC. 906.
7. FOR ALL ROOF GUTTER DRAINS, REFER TO ARCHITECTURAL PLANS OR CIVIL PLANS
8. 1/2 HOUR RATED WALL & CEILING ASSEMBLY AT ALL SLEEP QUARTERS - TYP. FIRE PARTITION CONTINUITY SHALL EXTEND FROM THE TOP OF THE FOUNDATION OR FLOOR / CEILING ASSEMBLY BELOW & BE SECURELY ATTACHED TO THE UNDERSIDE OF THE FLOOR OR SHEATHING, DECK OR SLAB ABOVE OR THE UNDERSIDE OF A FLOOR / CEILING ASSEMBLY HAVING A FIRE-RESISTANCE RATING OF NOT LESS THAN 1/2 HOUR

CONSTRUCTION NOTES

1. FOR CONTINUATION OF 4" WASTE SEE SHEET P1.0
2. FOR CONTINUATION OF 4" WASTE SEE SHEET P3.1B
3. FOR CONTINUATION OF 2" VENT SEE SHEET P3.1B
4. ROUTE PUMPED CONDENSATE LINE UP IN WALL AND ROUTE TO 3/4" GRAVITY LINE. ROUTE GRAVITY LINE TO HIGHEST POINT FOR 1% SLOPE TO DISCHARGE
5. CONDENSATE DOWN TO TERMINATE INTO FLOOR SINK WITH A 1" AIR GAP ABOVE RIM
6. CONDENSATE DOWN TO TERMINATE INTO JANITOR SINK WITH A 1" AIR GAP ABOVE RIM
7. DISHWASHER (15) BY OTHERS, INSTALL PER CPC 704.3, 1014.1.3
8. REVERSE OSMOSIS SYSTEM (15) AND ATTACHED FIXTURES (COFFEE MAKER, WATER DISPENSER, AND ICE MAKER) BY OTHERS
9. ICE MAKER (15) BY OTHERS
10. 2" VENT FROM BELOW FINISHED FLOOR
11. SEPARATE INTAKE AND VENT FOR WATER HEATER. INSTALL PER MANUFACTURES SPECIFICATION

PLUMBING FLOOR PLAN - ENLARGED WASTE & VENT SEG A - FIRE STATION | SCALE: 1/4" = 1'-0" | 1

STK ARCHITECTS, INC.
42095 ZEVO DR., TEMECULA, CALIFORNIA 92590-3780
Phone: 951.296.9110 Fax: 951.296.6079 Email: stk@stkinc.com

CONSULTANT:

REVIEWED FOR CODE COMPLIANCE

DESIGN WEST ENGINEERING
MECHANICAL • ELECTRICAL • ENERGY CONSULTANTS
FIRE PROTECTION DESIGN SOLUTIONS INC.

REGISTERED PROFESSIONAL ENGINEER
No. 33209
SIGNED 04/14/2026
MECHANICAL
STATE OF CALIFORNIA

PROJECT ADMINISTERED BY:
CITY OF PERRIS

101 NORTH "D" STREET
PERRIS, CA 92570

PROJECT NAME:
SOUTH FIRE STATION AND ADMINISTRATIVE BUILDING

PROJECT CIP: F077

2495 MURRIETA ROAD
PERRIS, CA 92585

ISSUE INFORMATION:

DATE:	INFORMATION:
11-26-25	95% CD SUBMITTAL
02-05-26	1st PC RESPONSE
02-19-26	2nd PC RESPONSE

SHEET INFORMATION:

STK PROJECT NO.: 365-03-25
SCALE: AS NOTED
DATE: NOVEMBER 2025
PLOT DATE: –
DRAWN BY: JG / JW

SEAL:

SHEET TITLE:
PLUMBING FLOOR PLAN - ENLARGED WASTE & VENT SEG A - FIRE STATION

SHEET NO.:
P3.1A

25-114

THESE DRAWINGS AND DOCUMENTS SHALL BE RETAINED AND FOUND TO BE IN THE EXCLUSIVE OWNERSHIP OF STK ARCHITECTS, INC. AND ARE NOT TO BE USED IN ANY WAY OR ON ANY PROJECT OTHER THAN THAT FOR WHICH THEY HAVE BEEN PREPARED WITHOUT THE EXPRESS WRITTEN CONSENT OF STK ARCHITECTS, INC. ALL COMMON LAW, STATUTORY AND OTHER RESERVED RIGHTS, INCLUDING COPYRIGHT, TO THE DRAWINGS AND DOCUMENTS SHALL BE RESERVED TO STK ARCHITECTS, INC. UPON WRITTEN REQUEST OF STK ARCHITECTS, INC. THE CONTRACTOR OF RECORD SHALL RETURN ALL DRAWINGS AND DOCUMENTS AND DESTROY ANY ELECTRONIC DATA.

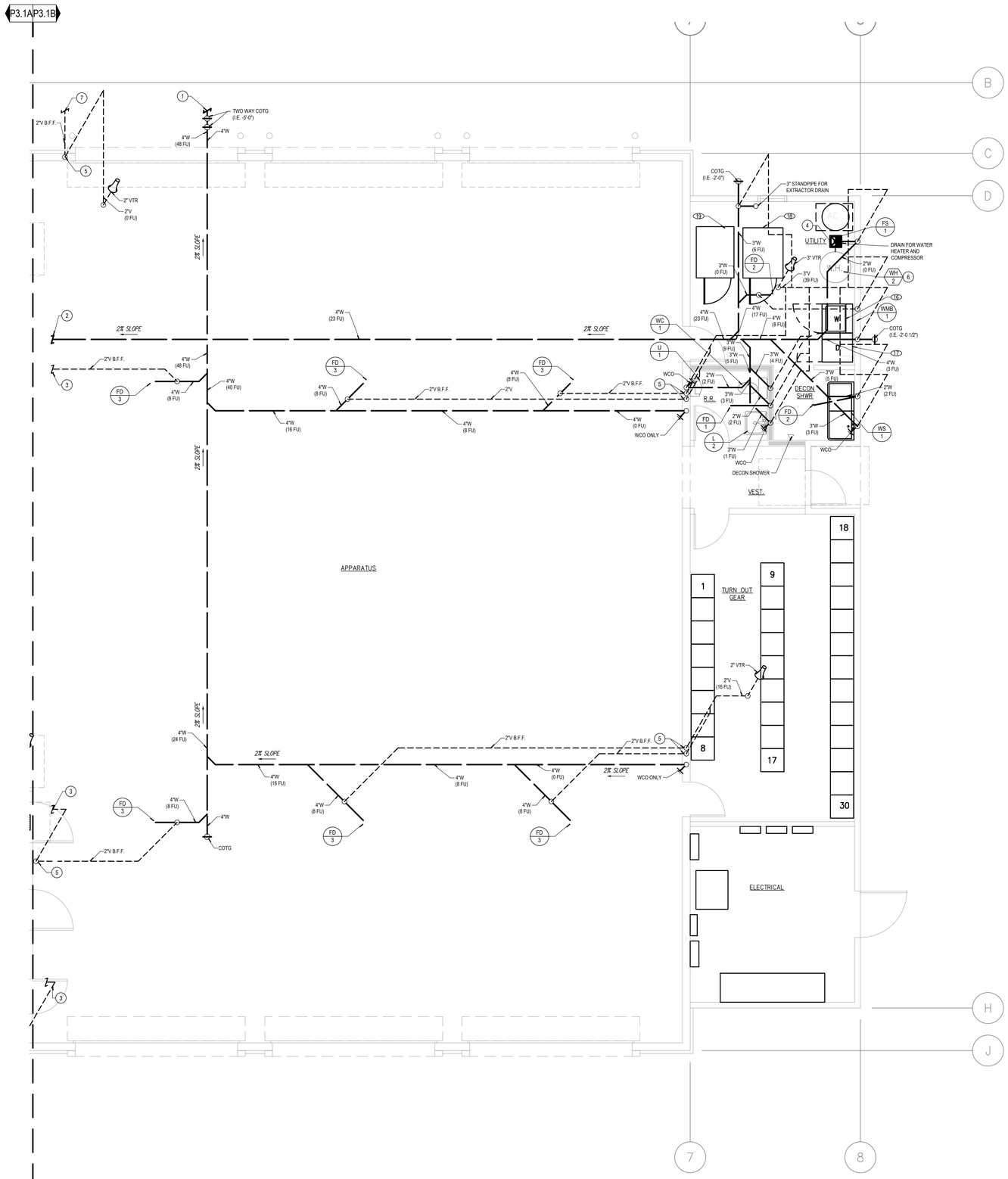

GENERAL NOTES

1. FOR LINE TYPES, SYMBOLS & ABBREVIATIONS SEE LEGEND ON P0.1.
2. ALL WASTE LINES INSIDE THE BUILDING SHALL BE SLOPED AT 2% SLOPE.
3. ALL WASTE LINES OUTSIDE THE BUILDING SHALL BE SLOPED AT 1% SLOPE UNLESS NOTED OTHERWISE ON CIVIL DRAWINGS.
4. ALL CONDENSATE LINES INSIDE THE BUILDING SHALL BE SLOPED AT 1% SLOPE.
5. CONDENSATE DRAIN LINES SHALL BE CONFIGURED OR PROVIDED WITH A CLEANOUT TO PERMIT THE CLEARING OF BLOCKAGES AND FOR MAINTENANCE WITHOUT REQUIRING THE DRAIN LINE TO BE CUT. (CPC 814.3.1)
6. ALL VENTING SHALL HAVE A MIN. OF 10' CLEARANCE FROM ANY FORCED AIR INLET W/ A MIN. OF 3' CLEARANCE ABOVE & A MIN OF 4' CLEARANCE FROM ANY PROPERTY LINE EXCEPT A PUBLIC WAY PER CPC SEC. 906.
7. FOR ALL ROOF GUTTER DRAINS, REFER TO ARCHITECTURAL PLANS OR CIVIL PLANS
8. 1/2 HOUR RATED WALL & CEILING ASSEMBLY AT ALL SLEEP QUARTERS - TYP. FIRE PARTITION CONTINUITY SHALL EXTEND FROM THE TOP OF THE FOUNDATION OR FLOOR / CEILING ASSEMBLY BELOW & BE SECURELY ATTACHED TO THE UNDERSIDE OF THE FLOOR OR SHEATHING, DECK OR SLAB ABOVE OR THE UNDERSIDE OF A FLOOR / CEILING ASSEMBLY HAVING A FIRE-RESISTANCE RATING OF NOT LESS THAN 1/2 HOUR

CONSTRUCTION NOTES

1. FOR CONTINUATION OF 4" WASTE SEE SHEET P1.0
2. FOR CONTINUATION OF 4" WASTE SEE SHEET P3.1A
3. FOR CONTINUATION OF 2" VENT SEE SHEET P3.1A
4. CONDENSATE DOWN TO TERMINATE INTO FLOOR SINK WITH A 1" AIR GAP ABOVE RIM
5. 2" VENT FROM BELOW FINISHED FLOOR
6. SEPARATE INTAKE AND VENT FOR WATER HEATER, INSTALL PER MANUFACTURES SPECIFICATION
7. FOR CONTINUATION OF 2" CLARIFIER VENT SEE SHEET P1.0

PLUMBING FLOOR PLAN - ENLARGED WASTE & VENT SEG B - FIRE STATION | SCALE: 1/4" = 1'-0" | 1

STK ARCHITECTS, INC.
42095 ZEVO DR., TEMECULA, CALIFORNIA 92590-3780
Phone: 951.296.9110 Fax: 951.296.6079 Email: stk@stkinc.com

CONSULTANT:
DESIGN WEST ENGINEERING
MECHANICAL / ELECTRICAL / ENERGY CONSULTANTS

REVIEWED FOR CODE COMPLIANCE

THESE PLANS AND CODE DOCUMENTS HAVE BEEN REVIEWED AND FOUND TO BE IN COMPLIANCE WITH THE 2022 CALIFORNIA BUILDING CODE. CONSTRUCTION IS SUBJECT TO FIELD INSPECTION BY THE BUILDING DEPARTMENT. THE APPROVAL OF THESE PLANS DOES NOT AUTHORIZE THE VIOLATION OF ANY CODE OR ORDINANCE. THE CONTRACTOR IS RESPONSIBLE FOR COMPLIANCE WITH ALL APPLICABLE CODES AND ORDINANCES. CONTRACTOR SHALL VERIFY ALL DIMENSIONS AND CONDITIONS AT THE JOB SITE. DISCREPANCIES SHALL BE REPORTED TO THE ARCHITECT BEFORE PROCEEDING WITH THE WORK. DO NOT SCALE DRAWINGS.
BUILDING DEPARTMENT APPROVAL INC.
PLAN CHECK NO.: _____



PROJECT ADMINISTERED BY:
CITY OF PERRIS

101 NORTH "D" STREET
PERRIS, CA 92570

PROJECT NAME:
SOUTH FIRE STATION AND ADMINISTRATIVE BUILDING

PROJECT CIP: F077

2495 MURRIETA ROAD
PERRIS, CA 92585

ISSUE INFORMATION:

DATE:	INFORMATION:
11-26-25	95% CD SUBMITTAL
02-05-26	1st PC RESPONSE
02-19-26	2nd PC RESPONSE

SHEET INFORMATION:

STK PROJECT NO.: 365-03-25
SCALE: AS NOTED
DATE: NOVEMBER 2025
PLOT DATE: –
DRAWN BY: JG / JW

SEAL:

SHEET TITLE:
PLUMBING FLOOR PLAN - ENLARGED WASTE & VENT SEG B - FIRE STATION

SHEET NO.:
P3.1B

25-114

IN: [PROJECT]\2025\25-114 Perris Fire Station_CA\25-114 P-1a.dwg
04/13/2026 8:08PM

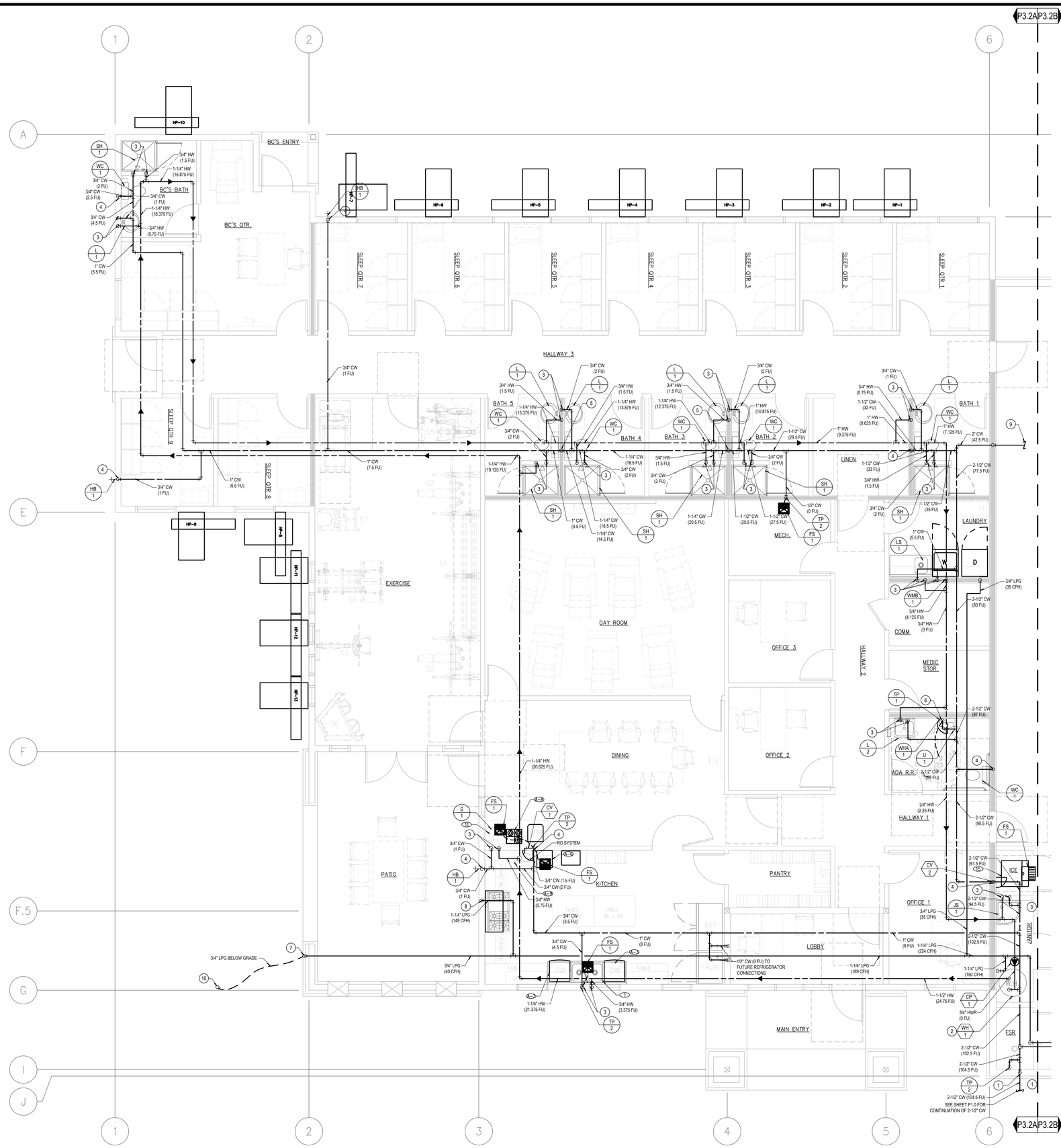

GENERAL NOTES

1. FOR LINE TYPES, SYMBOLS & ABBREVIATIONS SEE LEGEND ON P0.1.
2. HOT WATER & DRAIN PIPES UNDER ACCESSIBLE LAV. SHALL BE INSULATED OR OTHERWISE COVERED.
3. ROUTE HOT WATER LOOP AS CLOSE AS POSSIBLE TO ALL FIXTURES.
4. COORDINATE EXACT LOCATION OF S.O.V., BACKFLOW DEVICE, WATER METER, GAS METER & GREASE INTERCEPTOR WITH ARCHITECT.
5. SHUT-OFF VALVES SHALL BE PROVIDED ON ALL MAIN BRANCHES, RUNS TO RISERS AND WHERE SHOWN ON DRAWING. LOCATE SHUT-OFF VALVES OVER T-BAR CEILING WHEN POSSIBLE. PROVIDE ACCESS PANELS WHEN SHUT-OFF VALVES ARE LOCATED OVER HARD LID CEILINGS.
6. 1/2 HOUR RATED WALL & CEILING ASSEMBLY AT ALL SLEEP QUARTERS - TYP. FIRE PARTITION CONTINUITY SHALL EXTEND FROM THE TOP OF THE FOUNDATION OR FLOOR / CEILING ASSEMBLY BELOW & BE SECURELY ATTACHED TO THE UNDERSIDE OF THE FLOOR OR SHEATHING, DECK OR SLAB ABOVE OR THE UNDERSIDE OF A FLOOR / CEILING ASSEMBLY HAVING A FIRE-RESISTANCE RATING OF NOT LESS THAN 1/2 HOUR

CONSTRUCTION NOTES

1. 2-1/2" CW RISER & APPROVED 2-1/2" CW S.O.V. IN CONC. YARDBOX SEE DETAIL
2. 1-1/2" HW & CW AND 1-1/4" LPG TO WATER HEATER, POP-OFF DRAIN LINE FULL SIZE OF UNIT CONNECTION DN TO JANITOR SINK
3. 3/4" CW & HW DOWN TO FIXTURE
4. 3/4" CW DOWN TO FIXTURE
5. 1" CW DOWN TO FIXTURE
6. 1-1/2" CW DOWN TO FIXTURE
7. 3/4" LPG (40 CFH) DOWN IN WALL AND ROUTE TO BBQ
8. 1-1/4" LPG DOWN TO FIXTURE
9. 2" CW CONTINUED ON SHEET P-3.2B
10. ROUTE 3/4" LPG (40 CFH) UP FROM BELOW GRADE WITH SHUT OFF VALVE AND CONNECT TO BBQ. COORDINATE WITH ARCHITECTURAL DRAWINGS FOR EXACT LOCATION OF BBQ

PLUMBING FLOOR PLAN - ENLARGED CW&HW WATER SEG A - FIRE STATION

SCALE: 1/4" = 1'-0" | 1

STK ARCHITECTURE, INC.
42095 ZEVO DR., TEMECULA, CALIFORNIA 92590-3780
Phone: 951.296.9110 Fax: 951.296.6079 Email: stk@stkinc.com

CONSULTANT:
DESIGN WEST ENGINEERING
MECHANICAL / ELECTRICAL / ENERGY CONSULTANTS
DEPARTMENT
BUILDING ENERGY SOLUTIONS INC.

REVIEWED FOR CODE COMPLIANCE

THESE PLANS AND DOCUMENTS SHALL BE REVIEWED AND FOUND TO BE IN COMPLIANCE WITH THE 2022 CALIFORNIA BUILDING CODE BEFORE CONSTRUCTION IS STARTED. THESE PLANS AND DOCUMENTS ARE SUBJECT TO FIELD INSPECTIONS BY THE BUILDING OFFICIAL. THE CONTRACTOR SHALL KEEP A COPY OF THE APPROVED PLANS AND DOCUMENTS ON THE JOB SITE AT ALL TIMES. CONTACT THE BUILDING DEPARTMENT FOR INSPECTIONS AND REQUIRED NOTICES.

BY: _____ DATE: _____

REGISTERED PROFESSIONAL ENGINEER
STEVEN R. WESTERGARD
No. 33209
SIGNED 04/14/2026
MECHANICAL
STATE OF CALIFORNIA

PROJECT ADMINISTERED BY:
CITY OF PERRIS

101 NORTH "D" STREET
PERRIS, CA 92570

PROJECT NAME:
SOUTH FIRE STATION AND ADMINISTRATIVE BUILDING

PROJECT CIP: F077

2495 MURRIETA ROAD
PERRIS, CA 92585

ISSUE INFORMATION:

DATE:	INFORMATION:
11-26-25	95% CD SUBMITTAL
02-05-26	1st PC RESPONSE
02-19-26	2nd PC RESPONSE

SHEET INFORMATION:

STK PROJECT NO.: 365-03-25
SCALE: AS NOTED
DATE: NOVEMBER 2025
PLOT DATE: –
DRAWN BY: JG / JW

SEAL:

SHEET TITLE:
PLUMBING FLOOR PLAN - ENLARGED CW&HW WATER SEG A - FIRE STATION

SHEET NO.:
P3.2A

25-114

R:\PROJECTS\2025\25-114 Perris Fire Station_CA\D\25-114 P-ARCH.dwg
04/14/2026 8:38PM

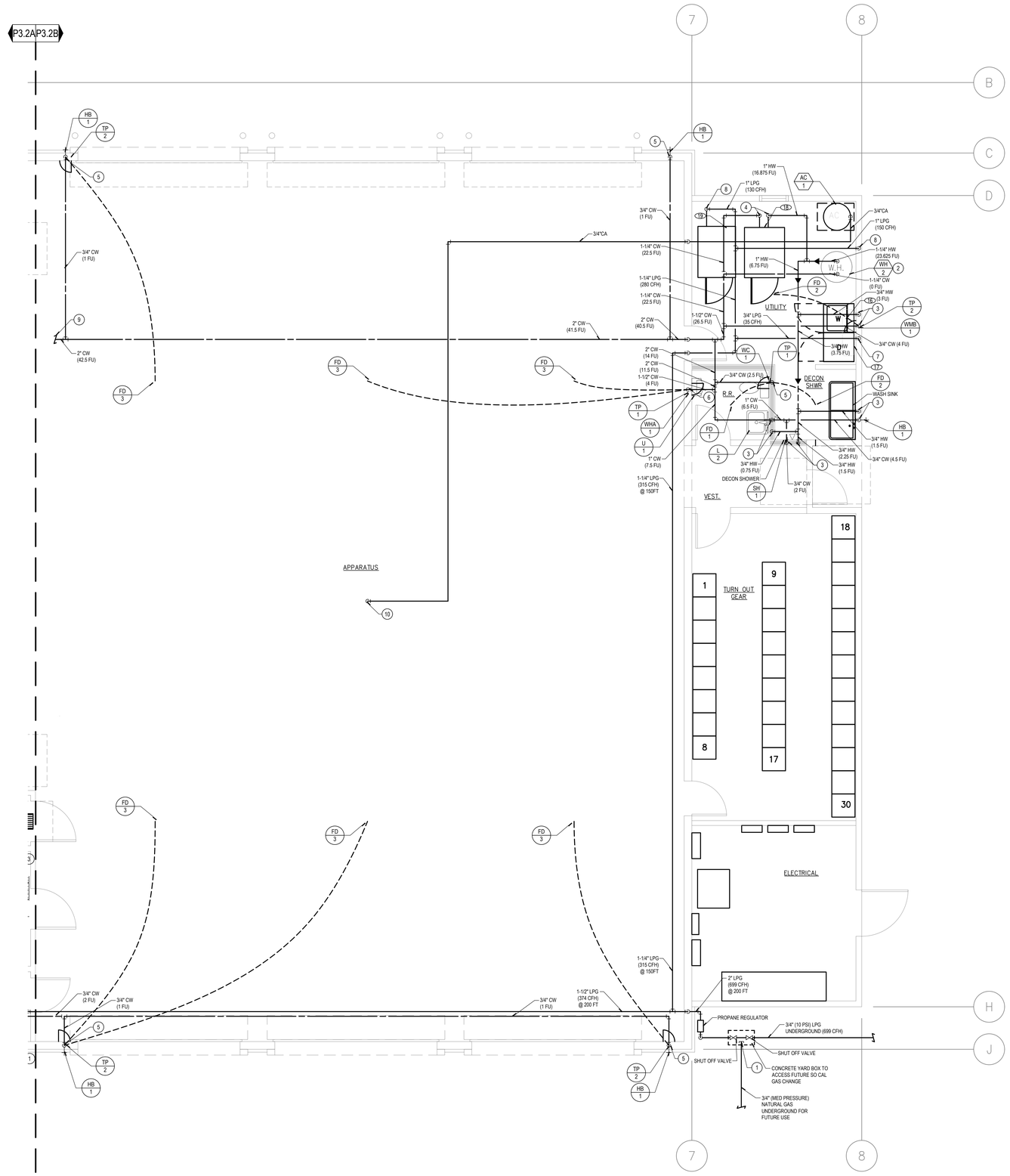

GENERAL NOTES

1. FOR LINE TYPES, SYMBOLS & ABBREVIATIONS SEE LEGEND ON P0.1.
2. HOT WATER & DRAIN PIPES UNDER ACCESSIBLE LAV. SHALL BE INSULATED OR OTHERWISE COVERED.
3. ROUTE HOT WATER LOOP AS CLOSE AS POSSIBLE TO ALL FIXTURES.
4. COORDINATE EXACT LOCATION OF S.O.V., BACKFLOW DEVICE, WATER METER, GAS METER & GREASE INTERCEPTOR WITH ARCHITECT.
5. SHUT-OFF VALVES SHALL BE PROVIDED ON ALL MAIN BRANCHES, RUNS TO RISERS AND WHERE SHOWN ON DRAWING. LOCATE SHUT-OFF VALVES OVER T-BAR CEILING WHEN POSSIBLE. PROVIDE ACCESS PANELS WHEN SHUT-OFF VALVES ARE LOCATED OVER HARD LID CEILINGS.
6. 1/2 HOUR RATED WALL & CEILING ASSEMBLY AT ALL SLEEP QUARTERS - TYP. FIRE PARTITION CONTINUITY SHALL EXTEND FROM THE TOP OF THE FOUNDATION OR FLOOR / CEILING ASSEMBLY BELOW & BE SECURELY ATTACHED TO THE UNDERSIDE OF THE FLOOR OR SHEATHING, DECK OR SLAB ABOVE OR THE UNDERSIDE OF A FLOOR / CEILING ASSEMBLY HAVING A FIRE-RESISTANCE RATING OF NOT LESS THAN 1/2 HOUR

CONSTRUCTION NOTES

1. 3/4" GAS LINE CAPPED FOR FUTURE USE
2. 1-1/4" HW & CW AND 1" LPG TO WATER HEATER, POP-OFF DRAIN LINE FULL SIZE OF UNIT CONNECTION DN TO FLOOR SINK
3. 3/4" CW & HW DOWN TO FIXTURE
4. 1-1/4" CW & HW DOWN TO FIXTURE
5. 3/4" CW DOWN TO FIXTURE
6. 1-1/2" CW DOWN TO FIXTURE
7. 3/4" LPG DOWN TO FIXTURE
8. 1" LPG DOWN TO FIXTURE
9. 2" CW CONTINUED ON SHEET P-3.2A
10. 3/4" COMPRESSED AIR LINE WITH QUICK DISCONNECT AIR CONNECTION

PLUMBING FLOOR PLAN - ENLARGED CW&HW WATER SEG B - FIRE STATION | SCALE: 1/4" = 1'-0" | 1

STK ARCHITECTS, INC.
42095 ZEVO DR., TEMECULA, CALIFORNIA 92590-3780
Phone: 951.296.9110 Fax: 951.296.6079 Email: stk@stkinc.com

CONSULTANT:

REVIEWED FOR CODE COMPLIANCE

DESIGN WEST ENGINEERING
MECHANICAL / ELECTRICAL / ENERGY CONSULTANTS
FIRE/LIFE SAFETY
SOLUTIONS INC.

REGISTERED PROFESSIONAL ENGINEER
No. 33209
SIGNED 04/14/2026
MECHANICAL
STATE OF CALIFORNIA

PROJECT ADMINISTERED BY:
CITY OF PERRIS

101 NORTH "D" STREET
PERRIS, CA 92570

PROJECT NAME:
SOUTH FIRE STATION AND ADMINISTRATIVE BUILDING

PROJECT CIP: F077

2495 MURRIETA ROAD
PERRIS, CA 92585

ISSUE INFORMATION:

DATE:	INFORMATION:
11-26-25	95% CD SUBMITTAL
02-05-26	1st PC RESPONSE
02-19-26	2nd PC RESPONSE

SHEET INFORMATION:

STK PROJECT NO.: 365-03-25
SCALE: AS NOTED
DATE: NOVEMBER 2025
PLOT DATE: –
DRAWN BY: JG / JW

SEAL:

SHEET TITLE:
PLUMBING FLOOR PLAN - ENLARGED CW&HW WATER SEG B - FIRE STATION

SHEET NO.:
P3.2B

25-114

BY: DRS/JEC/20250520; I:\Perris Fire Station_CAD\SD-14 (P-1 to P-3).dwg
04/14/2026 3:08PM

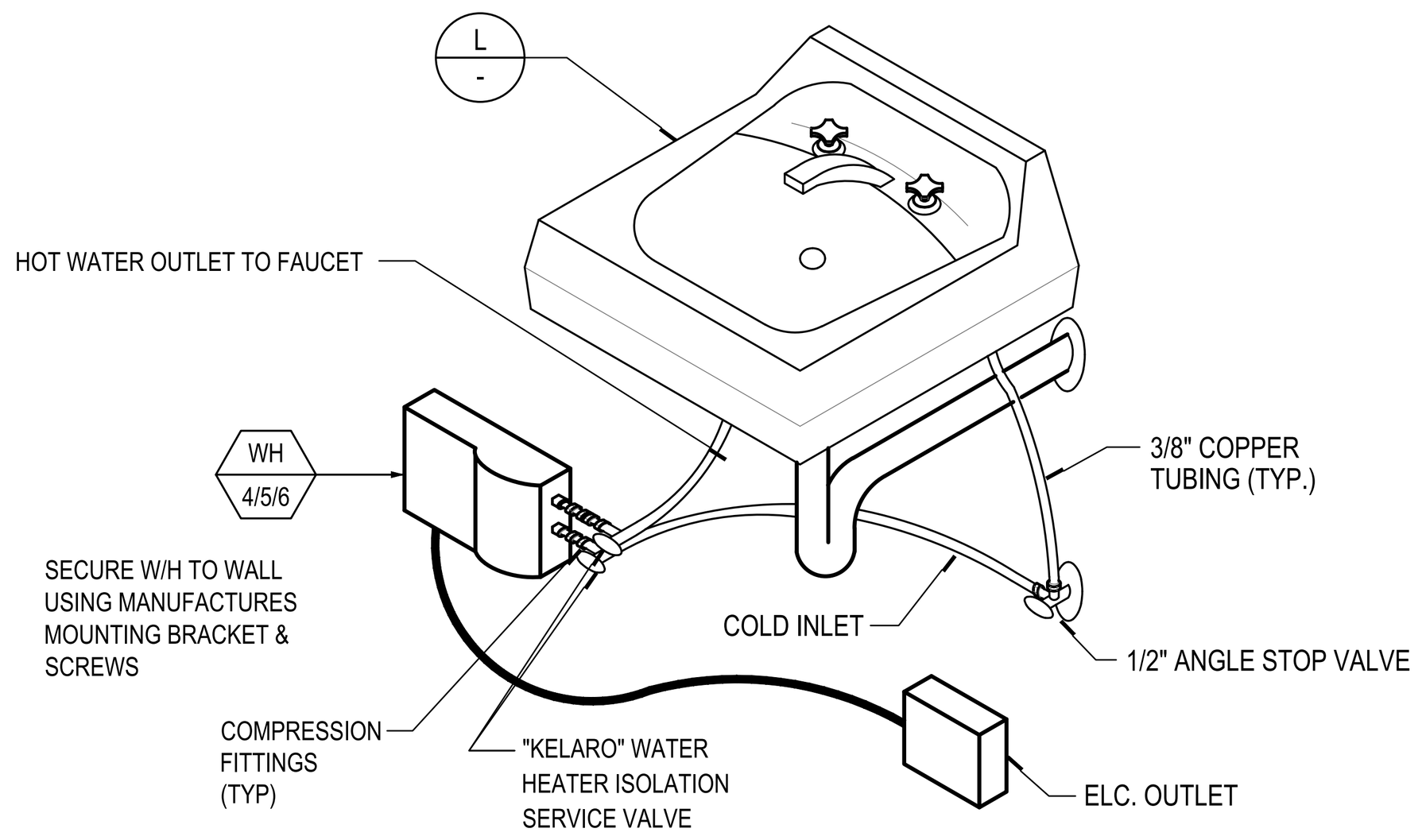

NOTE:
INSTANTANEOUS WATER HEATER WITH AN INPUT RATING GREATER THAN 6.8 KBTU/HR (2 KW) SHALL HAVE ISOLATION VALVES ON BOTH THE COLD WATER SUPPLY AND THE HOT WATER PIPE LEAVING THE WATER HEATER, AND HOSE BIBBS OR OTHER FITTINGS ON EACH VALVE FOR FLUSHING THE WATER HEATER WHEN THE VALVES ARE CLOSED. (SECTION 110.3(c)6)

CHRONOMITE TO LAV 13

INSTALL PER CPC (SEC. 814.0 - 814.3)

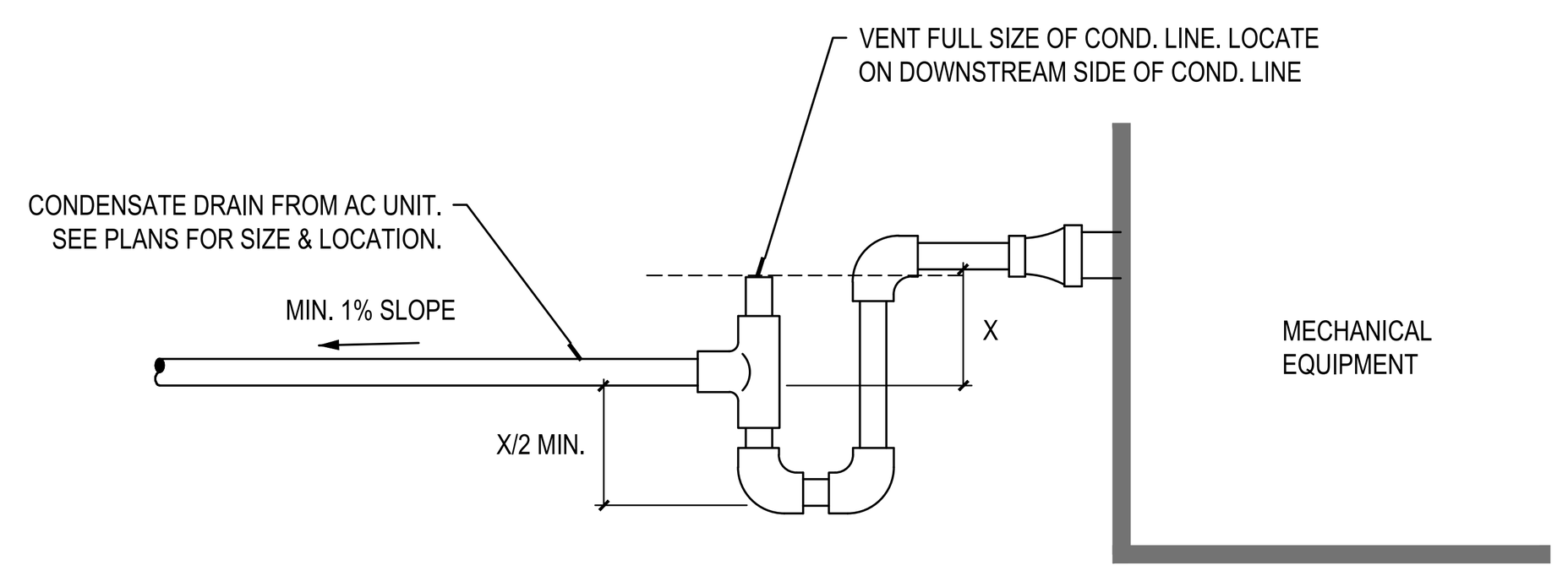

DRAW THROUGH UNIT:
X = FAN INLET PRESSURE (" W.C.) + 1"

PLUMBING CONTRACTOR TO COORDINATE WITH MECHANICAL CONTRACTOR TO VERIFY STATIC PRESSURE OF UNIT IN INCHES WATER COLUMN ("W.C.)

CONDENSATE CONNECTION 9

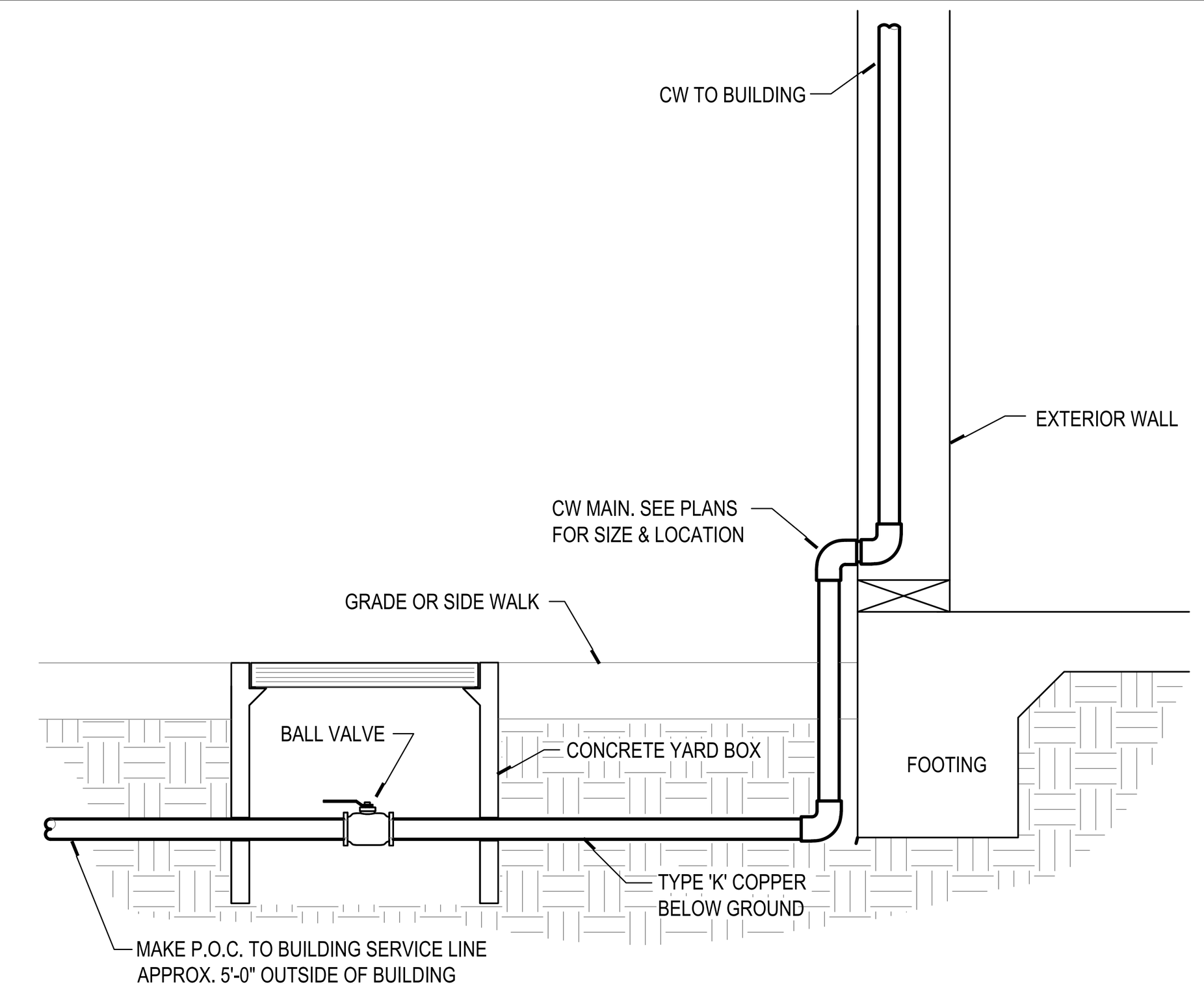

COLD WATER RISER 5

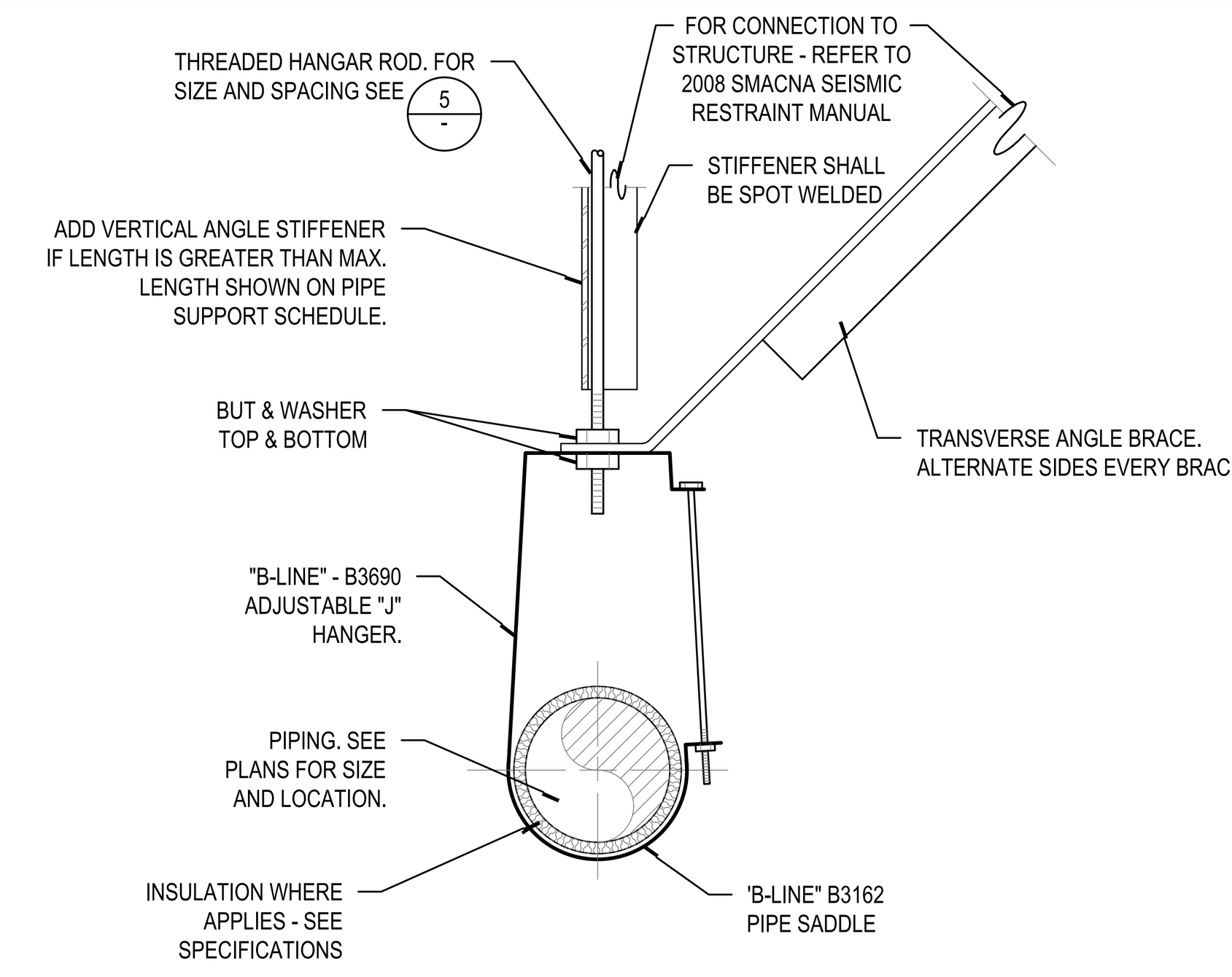

NOTE:

1. DETAIL APPLIES TO PIPES 2" I.D. AND SMALLER.
2. REFER TO PIPE SUPPORT SCHEDULE FOR ADDITIONAL INFORMATION.

PIPE SUPPORT - SMALL 1

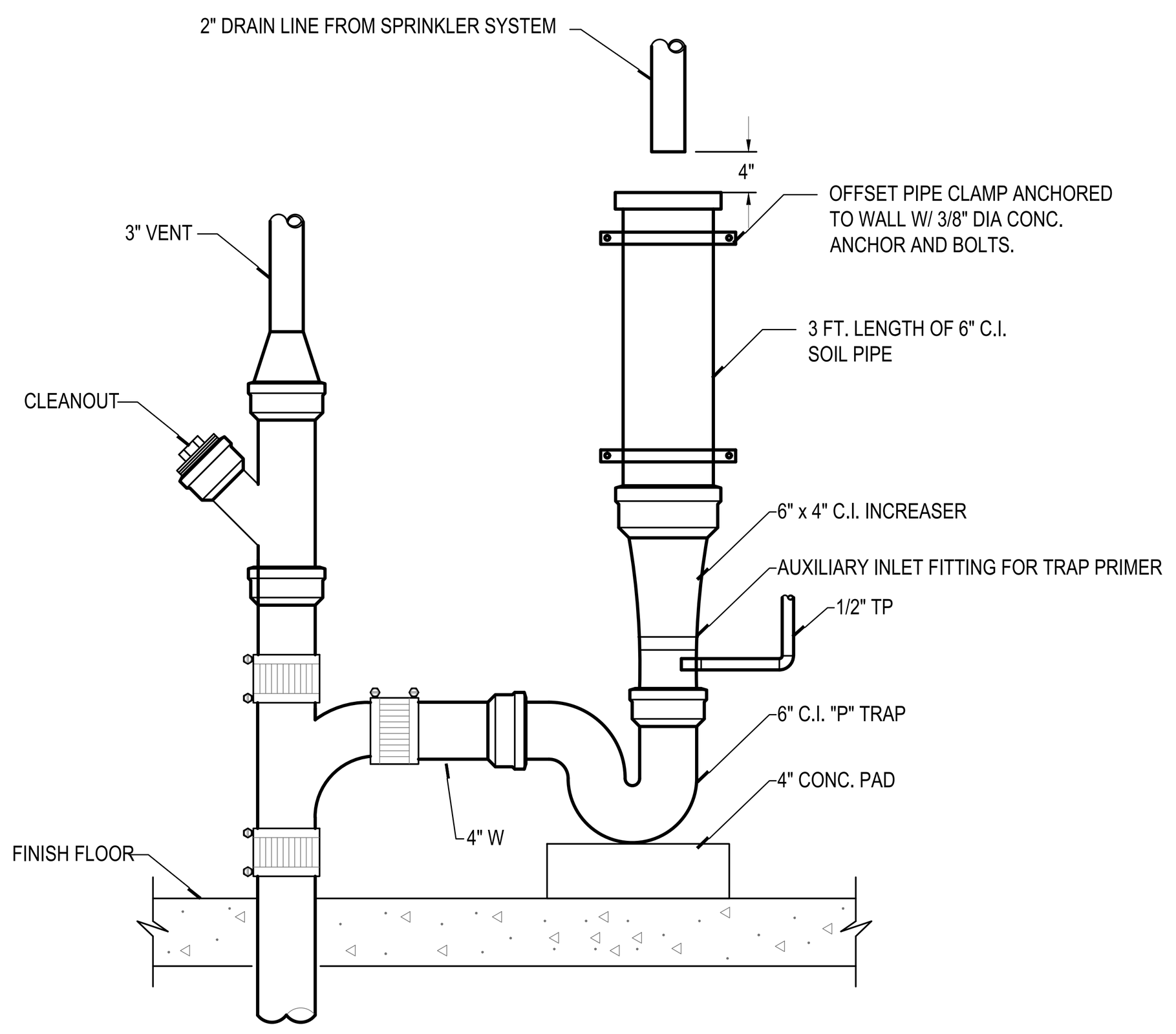

HUB DRAIN FOR FIRE SPRINKLER 14

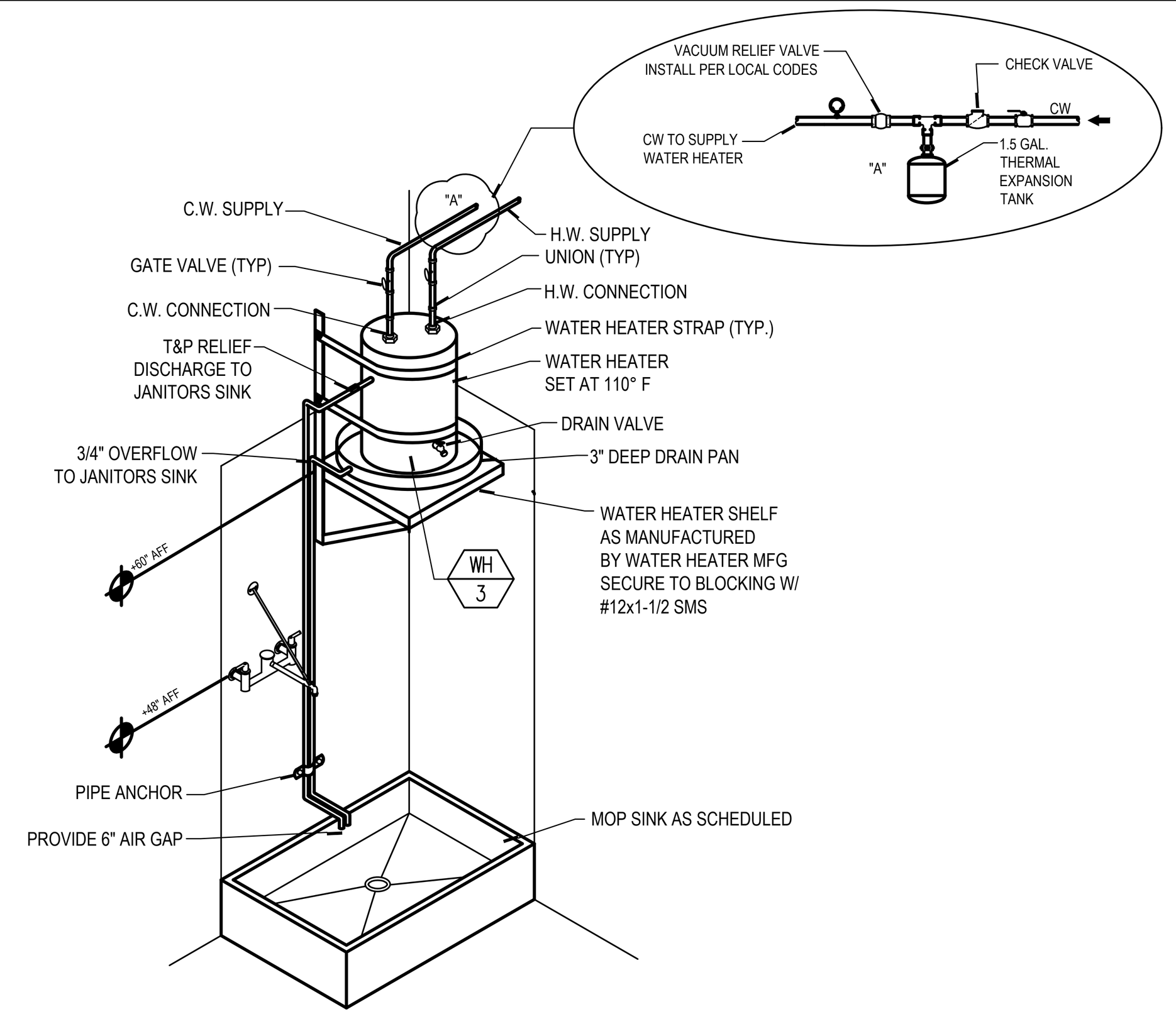

ELECTRIC TANK WATER HEATER OVER JANITOR SINK 10

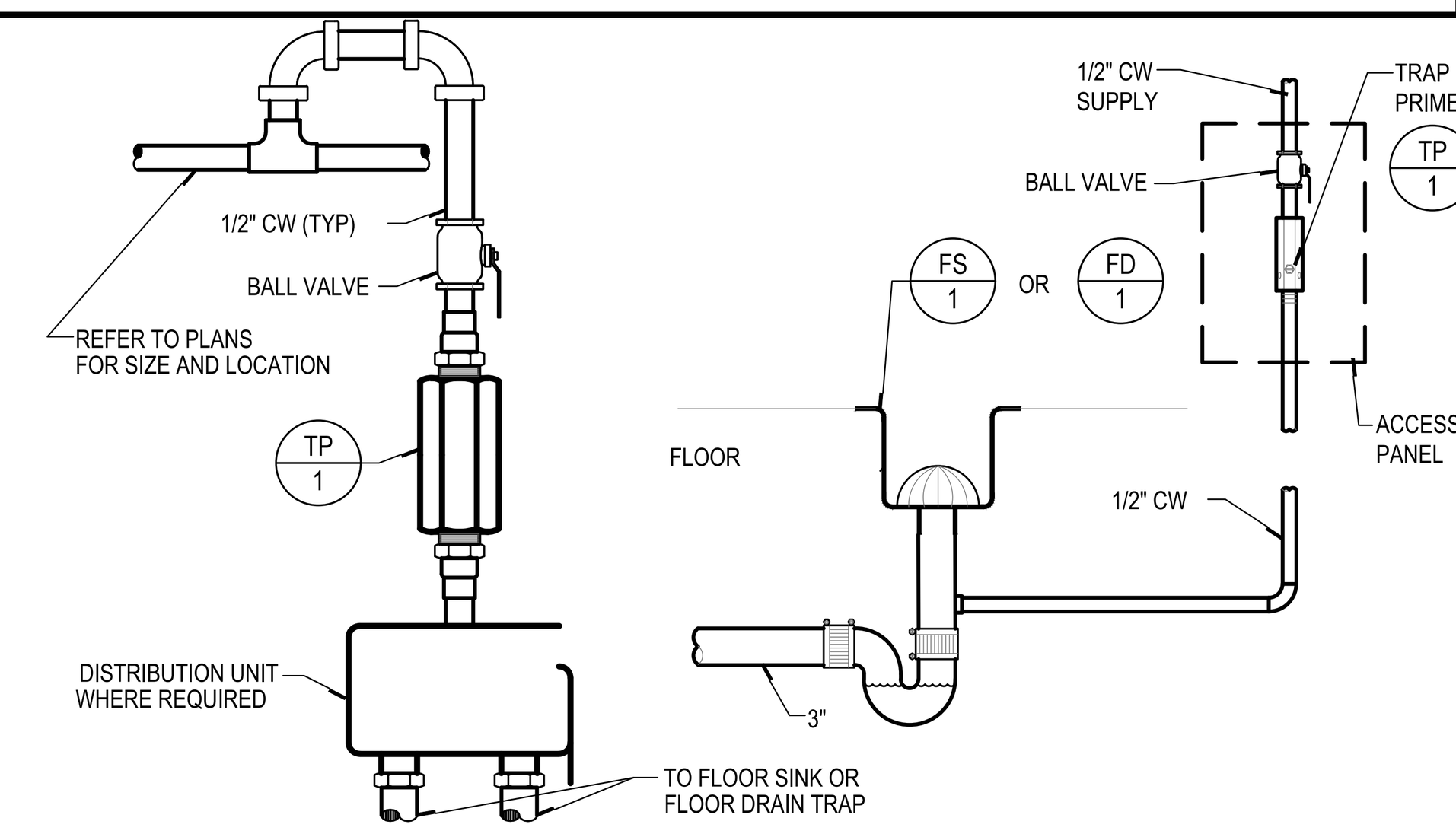

FLOOR DRAIN TRAP PRIMER DISTRIBUTION CHART				
NO. OF DRAINS	DISTRIBUTION UNIT MODEL	MAX. WATER DEL. ON 15 SEC. PRESS. DROP.	USE STAND PIPE STYLE	DISTRIBUTION UNIT IS
1	N/A	2 OZ.	STRAIGHT	NOT REQUIRED
2	DU-2	2 OZ.	STRAIGHT	2 OPENING
3	DU-3	5 OZ.	STRAIGHT	3 OPENING
4	DU-4	5 OZ.	STRAIGHT	4 OPENING

NOTE:
ACCESS PANEL SHALL NOT BE INSTALLED BEHIND GRAB BARS.

TRAP PRIMER CONNECTION 6

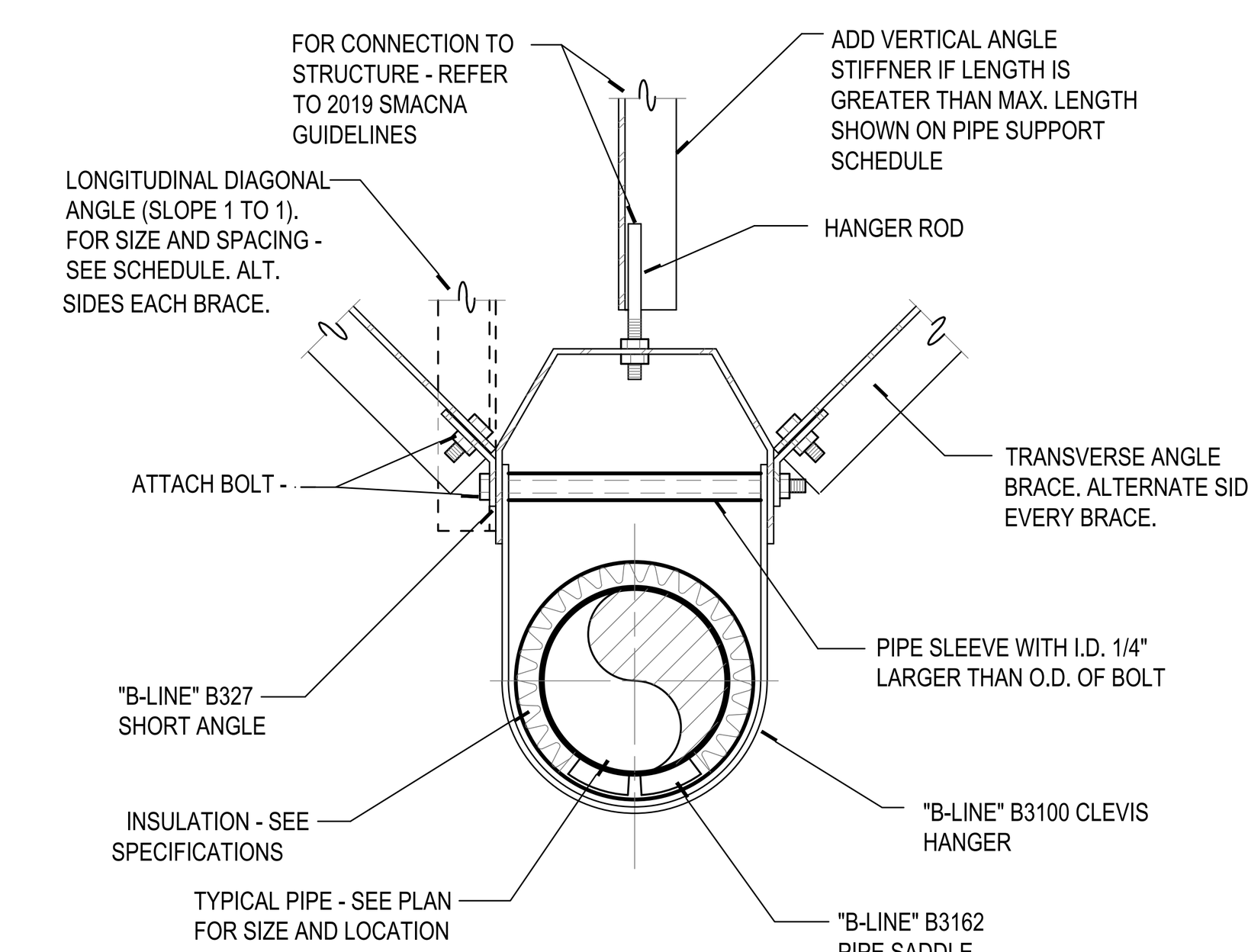

NOTE:

1. DETAIL APPLIES TO PIPES 2-1/2" I.D. AND LARGER.

PIPE SUPPORT - LARGE 2

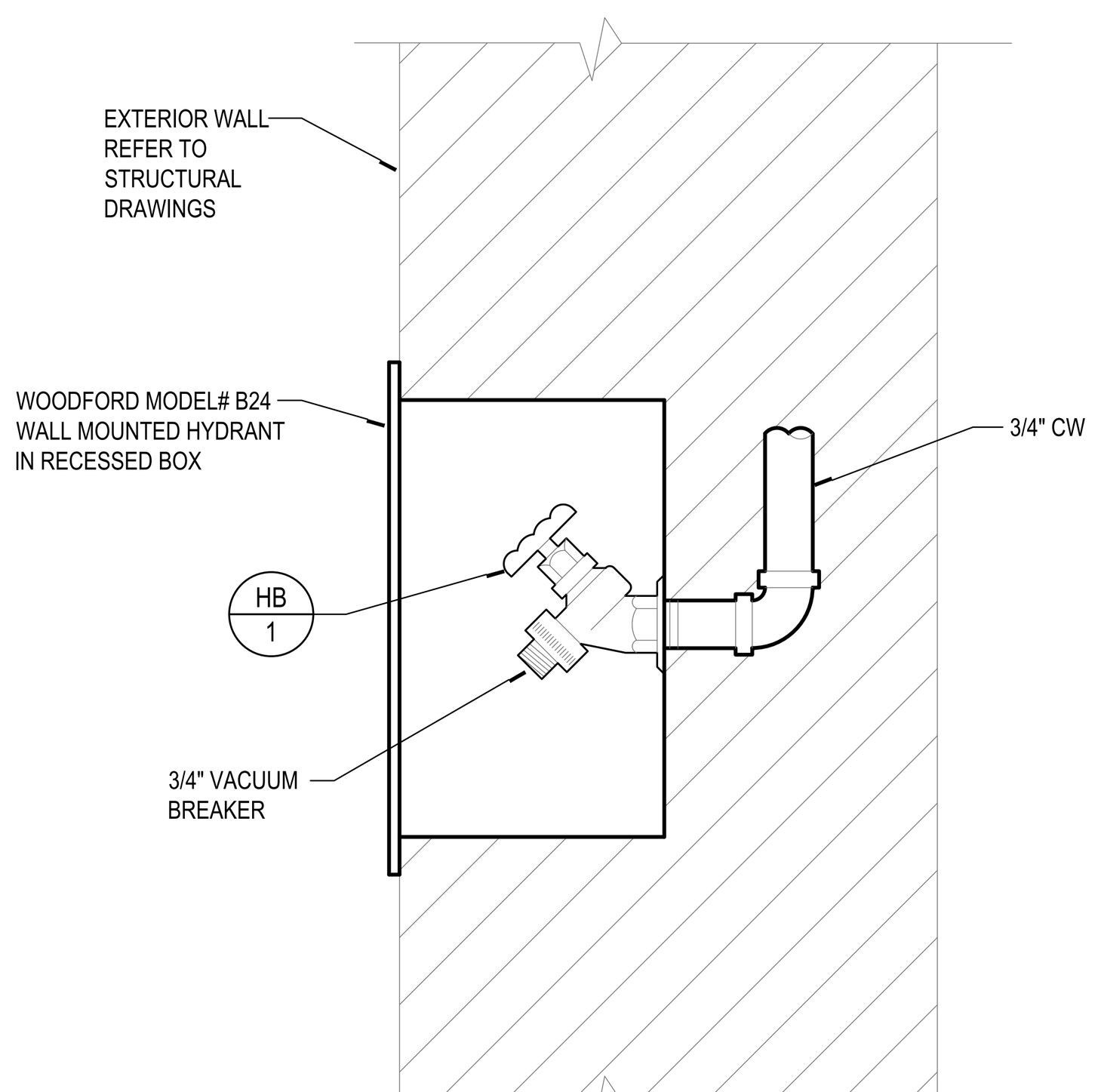

HOSE BIBB 15

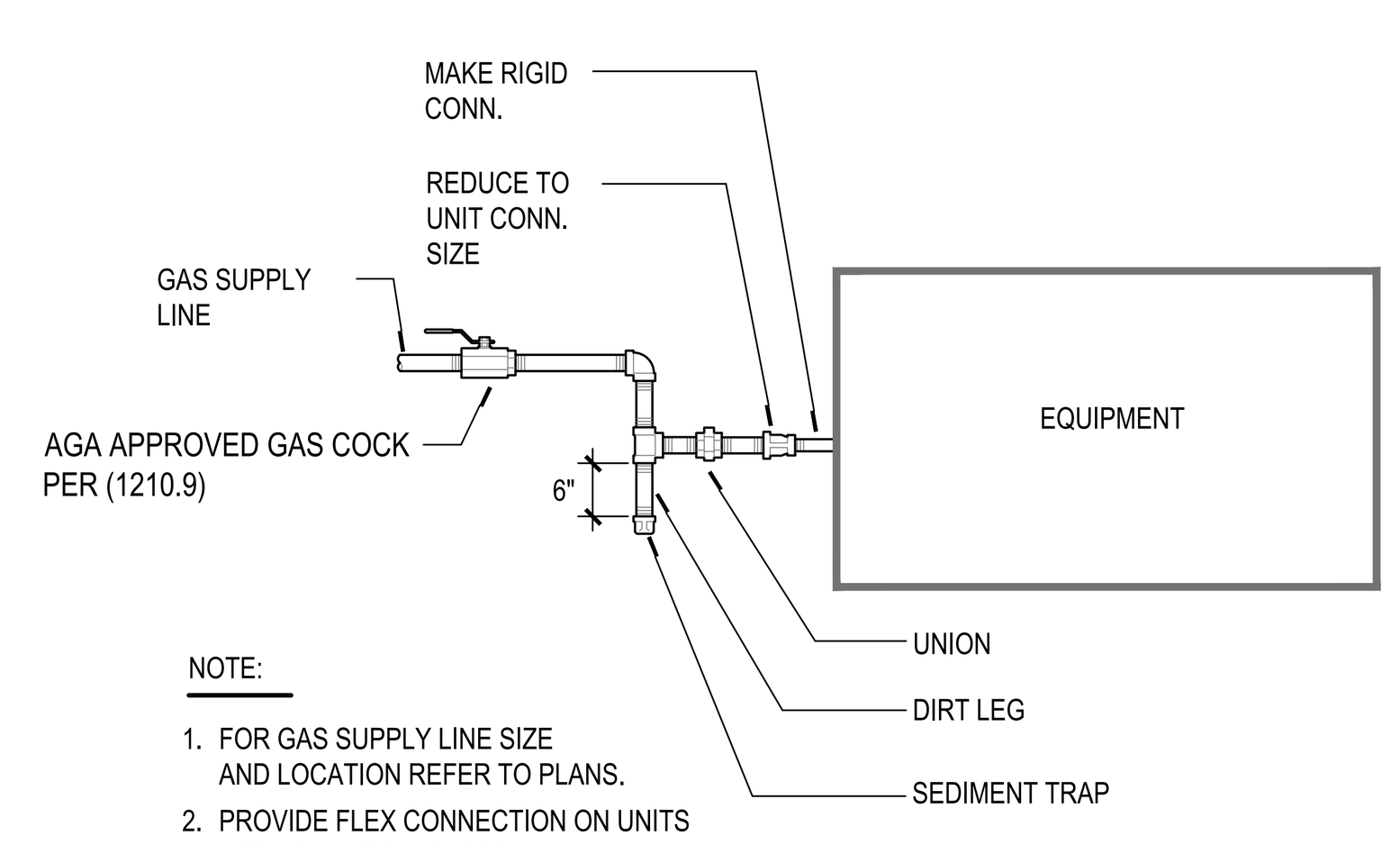

NOTE:

1. FOR GAS SUPPLY LINE SIZE AND LOCATION REFER TO PLANS.
2. PROVIDE FLEX CONNECTION ON UNITS WITH ISOLATION CURBS

GAS/PROPANE CONNECTION 11

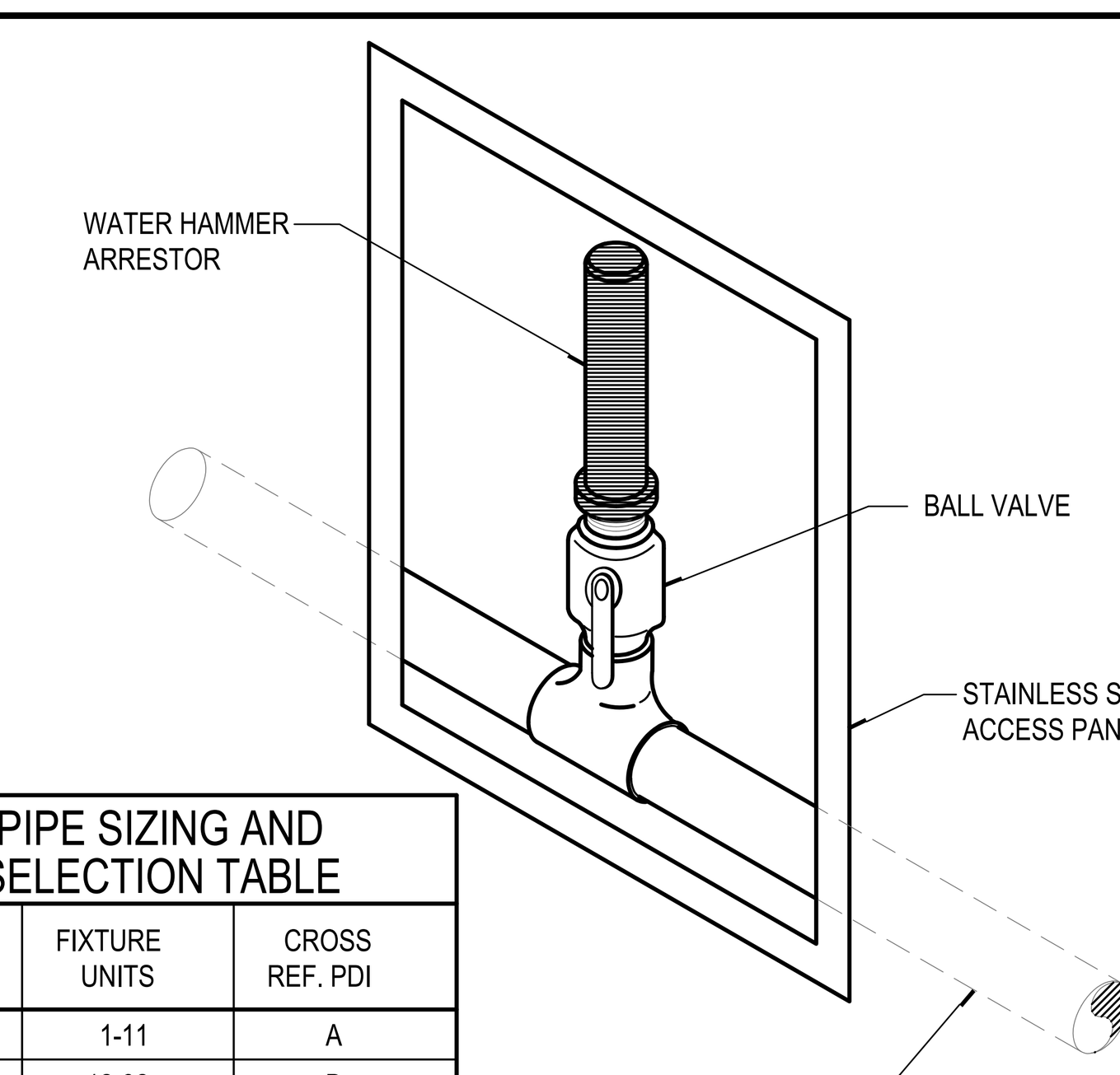

PIPE SIZING AND SELECTION TABLE		
PIPE SIZE	FIXTURE UNITS	CROSS REF. PDI
1/2"	1-11	A
3/4"	12-32	B
1"	33-60	C
1 1/4"	61-113	D
1 1/2"	114-154	E
2"	155-330	F

NOTE:
ACCESS PANEL SHALL NOT BE INSTALLED BEHIND GRAB BARS.

WATER HAMMER ARRESTOR 7

PIPE SIZE IN INCHES	MAXIMUM SPAN BETWEEN SUPPORT HANGERS O.C. HORIZ.	MAXIMUM SPAN BETWEEN SUPPORT HANGERS O.C. VERT.	HANGER ROD DIAMETER SIZE	MAX ROD LENGTH, NO STIFFENER	MAX ROD LENGTH, WITH STIFFENER	LONGITUDINAL ANGLE BRACE (2)	VERTICAL HANGER ANGLE (STIFFNER) (1)	TRANSVERSE ANGLE BRACE (2)	BOLT SIZE
COPPER TUBE & PIPE									
1/2 & 3/4	6'-0"	10'-0"	3/8"	16"	37"	1-1/2 x 1-1/2 x 18 ga @ 80'-0" O.C.	1 x 1 x 18ga	1-1/2 x 1-1/2 x 18 ga @ 40'-0" O.C.	3/8"
1 thru 1-1/2	6'-0"	10'-0"	3/8"	16"	37"	1-1/2 x 1-1/2 x 18 ga @ 80'-0" O.C.	1 x 1 x 18ga	1-1/2 x 1-1/2 x 18 ga @ 40'-0" O.C.	3/8"
2	10'-0"	10'-0"	3/8"	16"	37"	1-1/2 x 1-1/2 x 18 ga @ 80'-0" O.C.	1 x 1 x 18ga	2-1/2 x 2-1/2 x 16 ga @ 40'-0" O.C.	3/8"
STEEL PIPE FOR GAS									
1/2 & 3/4	6'-0"	6'-0"	3/8"	16"	37"	1-1/2 x 1-1/2 x 18 ga @ 80'-0" O.C.	1 x 1 x 18ga	1-1/2 x 1-1/2 x 18 ga @ 40'-0" O.C.	3/8"
1	8'-0"	8'-0"	3/8"	16"	37"	1-1/2 x 1-1/2 x 18 ga @ 80'-0" O.C.	1 x 1 x 18ga	1-1/2 x 1-1/2 x 18 ga @ 40'-0" O.C.	3/8"
SCHEDULE 40 PVC & ABS DWV (3)									
1/2 & 3/4	4'-0"	10'-0"	3/8"	16"	37"	1-1/2 x 1-1/2 x 18 ga @ 80'-0" O.C.	1 x 1 x 18ga	1-1/2 x 1-1/2 x 18 ga @ 40'-0" O.C.	3/8"
1 thru 2	4'-0"	10'-0"	3/8"	16"	37"	1-1/2 x 1-1/2 x 18 ga @ 80'-0" O.C.	1 x 1 x 18ga	1-1/2 x 1-1/2 x 18 ga @ 40'-0" O.C.	3/8"
CAST IRON HUBLESS (NO HUB)									
1-1/2 & 2	(A)	15'-0"	3/8"	16"	37"	1-1/2 x 1-1/2 x 18 ga @ 80'-0" O.C.	1 x 1 x 18ga	1-1/2 x 1-1/2 x 18 ga @ 40'-0" O.C.	3/8"
(A) SUPPORT EVERY JOINT. SUPPORT SHALL BE WITHIN 18 INCHES OF JOINT ON BOTH SIDES. (SUPPORT ALSO REQUIRED AT EACH HORIZONTAL JOINT CONNECTION.)									
ALL PIPING 2-1/2" AND LARGER PER THE FOLLOWING SMACNA GUIDELINES									
2-1/2	10'-0"	10'-0"	1/2"	18"	37"	2-1/2 x 2-1/2 x 16 ga @ 80'-0" O.C.	2 x 2 x 16ga	2-1/2 x 2-1/2 x 16 ga @ 40'-0" O.C.	3/8"
3	10'-0"	10'-0"	1/2"	18"	37"	2-1/2 x 2-1/2 x 16 ga @ 80'-0" O.C.	2 x 2 x 16ga	2-1/2 x 2-1/2 x 16 ga @ 40'-0" O.C.	3/8"
4	10'-0"	10'-0"	3/8"	18"	37"	2-1/2 x 2-1/2 x 16 ga @ 80'-0" O.C.	2 x 2 x 16ga	2-1/2 x 2-1/2 x 16 ga @ 40'-0" O.C.	1/2"

NOTES:
1. VERTICAL ANGLE ONLY REQUIRED WHEN ROD MAXIMUM LENGTH IS EXCEEDED.
2. BRACING MAY BE OMITTED WHERE TOP OF PIPE IS 12" OR LESS FROM BOTTOM OF HANGER SUPPORT CONNECTED TO STRUCTURE
3. ALLOW FOR EXPANSION EVERY 30'-0".

PIPE SUPPORT SCHEDULE 3

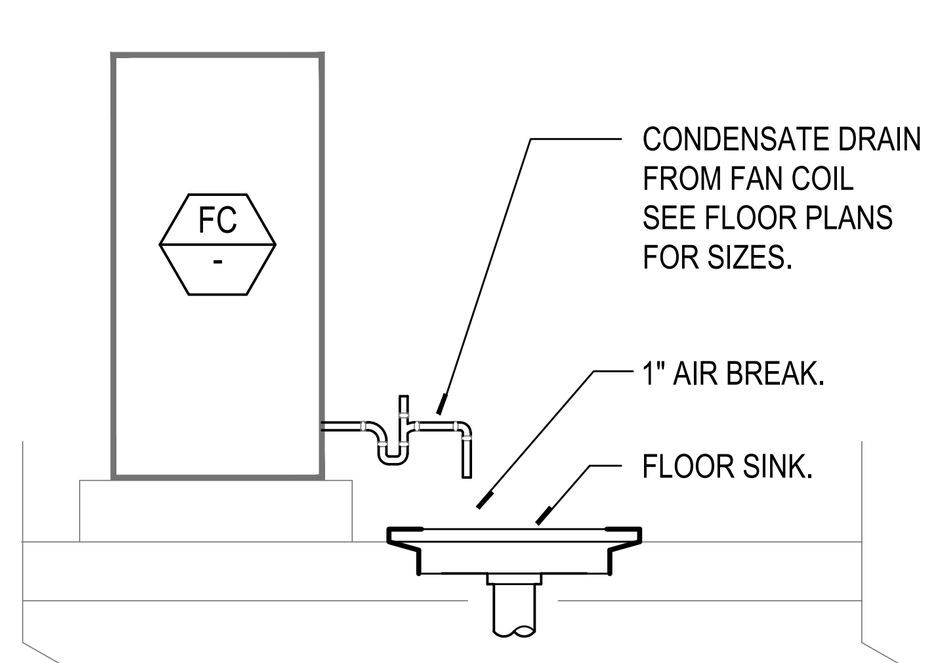

CONDENSATE TO FLOOR SINK 16

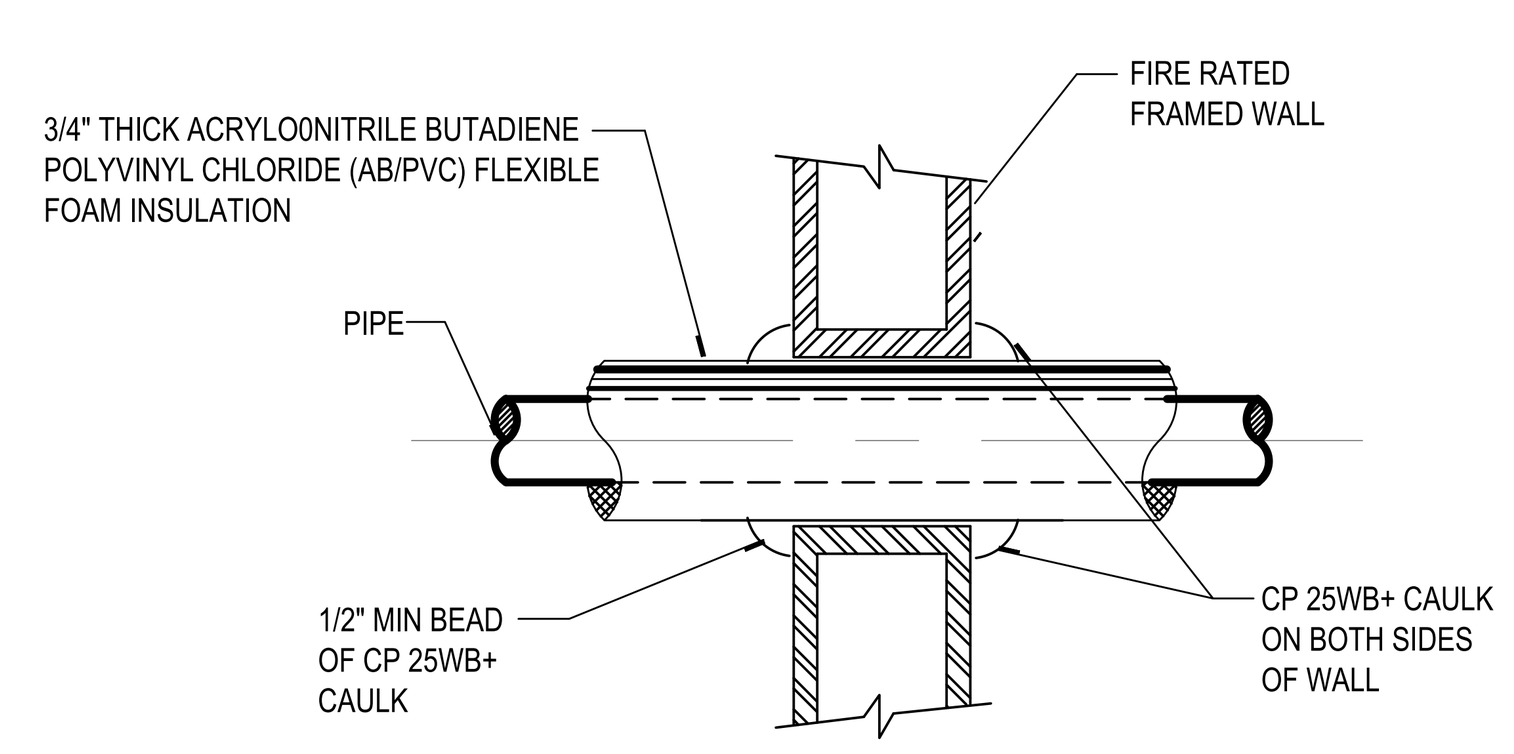

SPECIFICATIONS:

PENETRATIONS IN FIRE RESTRICTIVE WALLS, PARTITIONS AND FLOORS WHERE PROTECTED OPENINGS ARE REQUIRED SHALL BE FIRE STOPPED USING APPROVED MATERIALS, SUCURELY INSTALLED AND CAPABLE OF MAINTAINING THIER INTREGRITY AND PREVENTING THE MOVEMENT OF FLAMES AND/OR GASES THROUGH THE VOID SPACES BETWEEN PENETRATING MATERIALS AND WALLS, PARTITIONS AND FLOORS WHEN TESTED IN ACCORDANCE WITH ASTM STANDARD E-814 OR UL STANDARD 1479 (UBC SECTIONS 4304(e), 4305(a) & 4305(b)).

PROVIDE DESIGN DETAILS ON DRAWINGS DEPICTING APPROVED (LISTED) METHODS AND MATERIALS USED TO PROTECT PENETRATINGS WALLS, PARTITIONS AND FLOORS.

DESIGNS ARE LISTED BY UNDERWRITER'S LABORATORIES (FIRE RESISTANCE DIRECTORY) AND THE CALIFORNIA STATE FIRE MARSHALL (BUILDING MATERIAL LISTINGS). SPECIFIC DESIGN INFORMATION IS AVAILABLE FROM U.L. CSFM OR THE PRODUCT MANUFACTURER.

NOTES:

3M FIRE BARRIER PRODUCTS: CP 25WB+ CALIFORNIA STATE FIRE MARSHALL LISTING No. 4485-941:100

INSULATED PIPE:
U.L. DESIGN No. W-L-5040 (1-HOUR STUD WALL)
U.L. DESIGN No. W-L-5040 (2-HOUR STUD WALL)

PIPE THRU RATED WALL 12

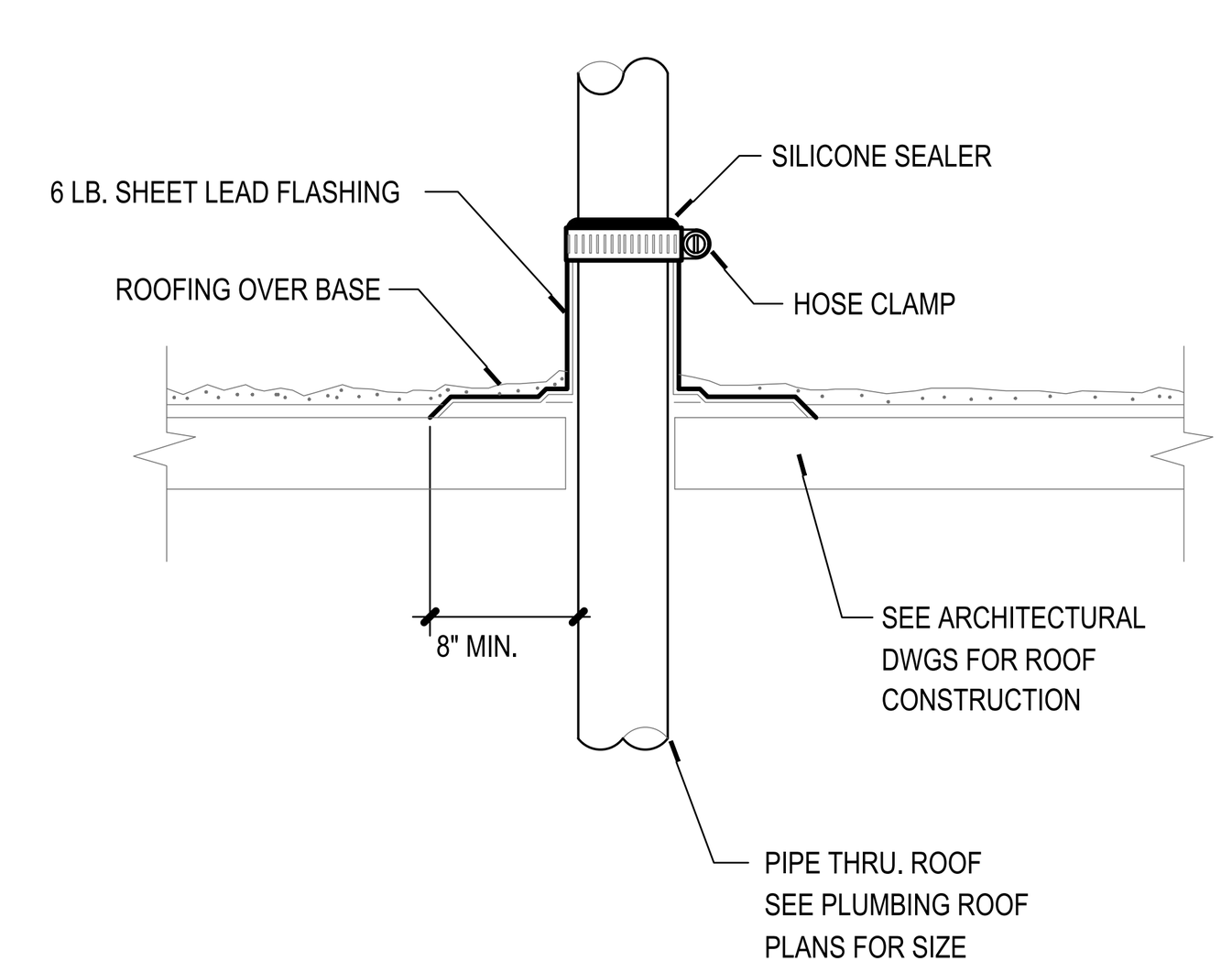

PIPE THRU ROOF 8

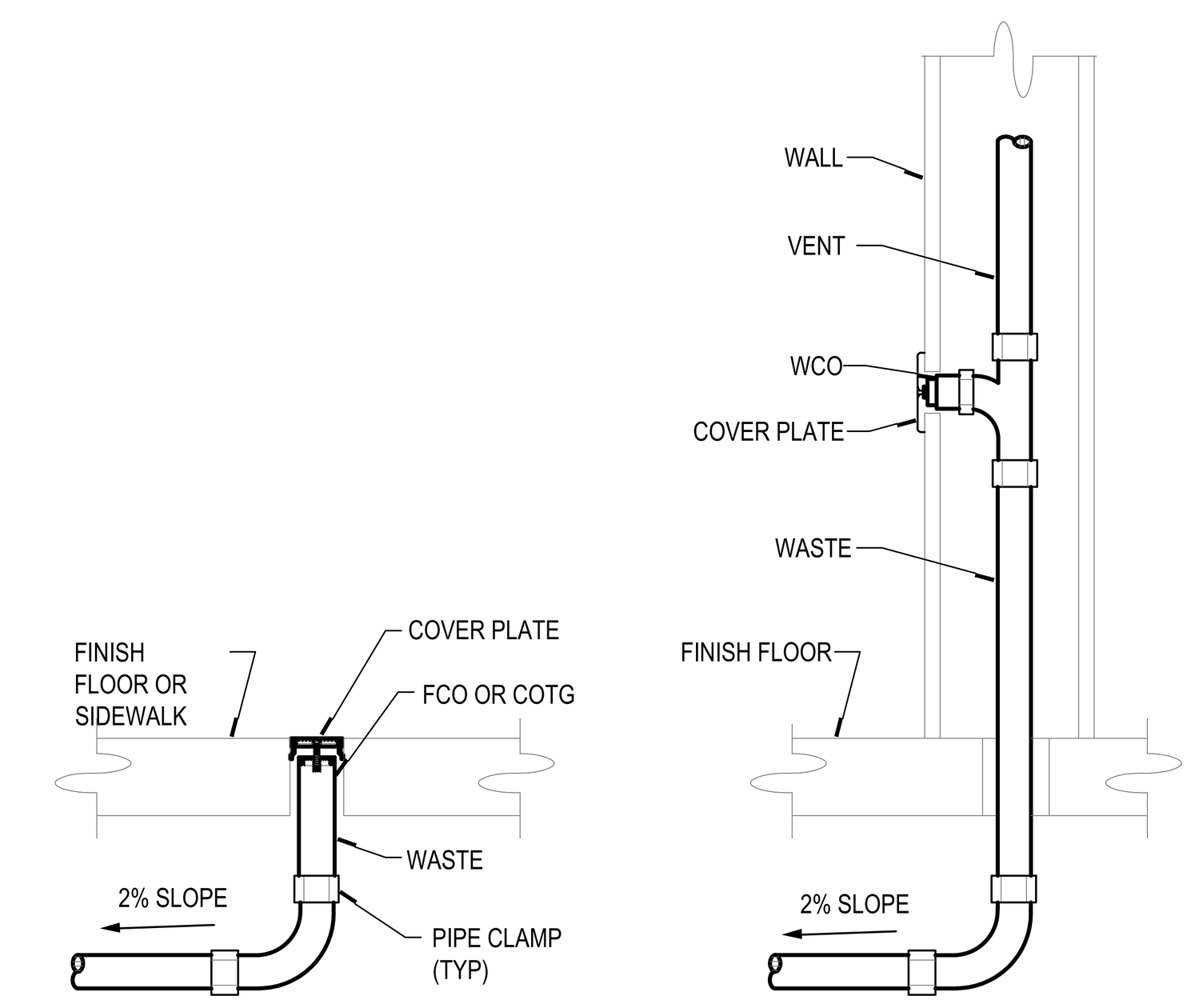

WASTE CLEANOUT 4

STK ARCHITECTURE, INC.
42095 ZEVO DR., TEMECULA, CALIFORNIA 92590-3780
Phone: 951.296.9110 Fax: 951.296.6079 Email: stk@stkinc.com

CONSULTANT:

REVIEWED FOR CODE COMPLIANCE

BUILDING BUREAU SOLUTIONS INC.

DESIGN WEST ENGINEERING
MECHANICAL • ELECTRICAL • ENERGY CONSULTANTS

REGISTERED PROFESSIONAL ENGINEER STEVEN M. JOHNSON No. 33209 SIGNED:04/14/2026 MECHANICAL STATE OF CALIFORNIA

PROJECT ADMINISTERED BY:
CITY OF PERRIS

101 NORTH "D" STREET
PERRIS, CA 92570

PROJECT NAME:
SOUTH FIRE STATION AND ADMINISTRATIVE BUILDING

PROJECT CIP: F077

2495 MURRIETA ROAD
PERRIS, CA 92585

ISSUE INFORMATION:

DATE:	INFORMATION:
11-26-25	95% CD SUBMITTAL
02-05-26	△1 1st PC RESPONSE
02-19-26	△2 2nd PC RESPONSE

SHEET INFORMATION:
STK PROJECT NO.: 365-03-25
SCALE: AS NOTED
DATE: NOVEMBER 2025
PLOT DATE: –
DRAWN BY: JG / JW

SEAL:

SHEET TITLE:
PLUMBING DETAILS

SHEET NO.:
P4.1

04/14/2026 6:38PM R:_PROJECT\2025\25-114 Perris Fire Station_CAD\25-114 P-Details.dwg

25-114

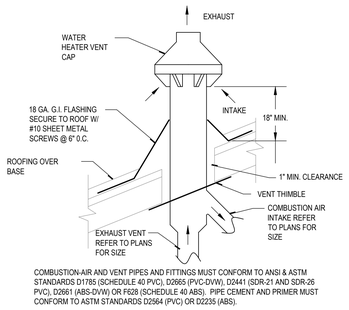

COMBUSTION-AIR AND VENT PIPES AND FITTINGS MUST CONFORM TO ANSI & ASTM STANDARDS D1785 (SCHEDULE 40 PVC), D2665 (PVC-DVW), D2441 (SDR-21 AND SDR-26 PVC), D2661 (ABS-DVW) OR F628 (SCHEDULE 40 ABS). PIPE CEMENT AND PRIMER MUST CONFORM TO ASTM STANDARDS D2564 (PVC) OR D2235 (ABS).

WH VENT THRU ROOF

-	13

WH-1 & WH-2 VENT | 9

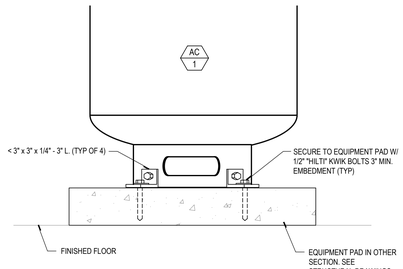

AIR COMPRESSOR MOUNTING | 5

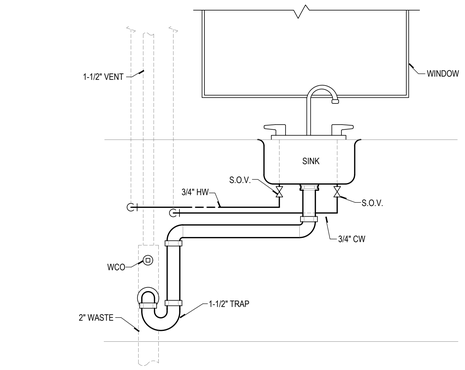

SINK CONNECTION | 1

-	14

-	10

COMPRESSED AIR CONNECTION | 6

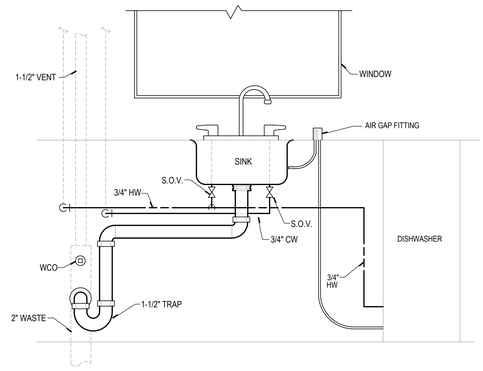

SINK CONNECTION W/ DISHWASHER | 2

-	15

-	11

WATER HEATER MOUNTING | 7

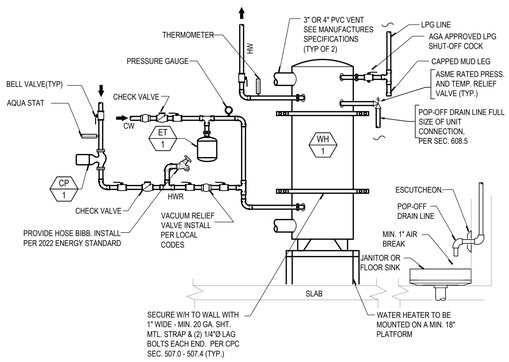

WASHING MACHINE BOX | 3

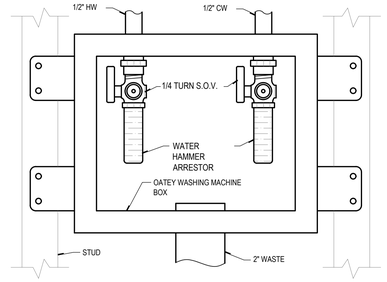

-	16

-	12

WATER HEATER MOUNTING | 8

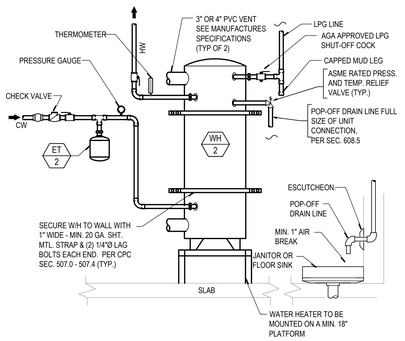

SEISMIC FLEX PIPE | 4

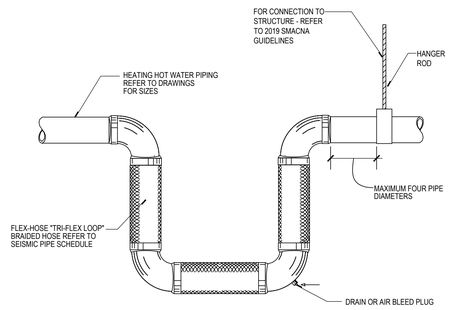

STK ARCHITECTURE, INC.
42095 ZEVO DR., TEMECULA, CALIFORNIA 92590-3780
Phone: 951.296.9110 Fax: 951.296.6079 Email: stk@stkinc.com

CONSULTANT:

REVIEWED FOR CODE COMPLIANCE

THESE PLANS AND CODE DOCUMENTS HAVE BEEN REVIEWED AND FOUND TO BE IN COMPLIANCE WITH THE 2022 CALIFORNIA BUILDING CODES. THIS REVIEW IS SUBJECT TO ALL CONDITIONS WRITTEN IN THE CORRESPONDENCE LETTER. THE CONTRACTOR IS RESPONSIBLE FOR THE CONSTRUCTION OF THE PROJECT IN ACCORDANCE WITH THE APPROVED PLANS AND ALL APPLICABLE CODES. THE CONTRACTOR SHALL NOTIFY THE BUILDING OFFICIAL OF ANY CHANGES MADE DURING CONSTRUCTION THAT ARE NOT IN COMPLIANCE WITH THE APPROVED PLANS. A COPY OF THE APPROVED PLANS MUST BE KEPT ON THE JOB SITE AT ALL TIMES DURING CONSTRUCTION.

BUILDING DEPARTMENT
Date: 02/19/2026

DESIGN WEST ENGINEERING
MECHANICAL / ELECTRICAL / ENERGY CONSULTANTS
DEPARTMENT: EUREKA, BERGET CONSULTANTS SOLUTIONS INC.

REGISTERED PROFESSIONAL ENGINEER
No. 33209
SIGNED 04/14/2026
MECHANICAL
STATE OF CALIFORNIA

PROJECT ADMINISTERED BY:
CITY OF PERRIS

101 NORTH "D" STREET
PERRIS, CA 92570

PROJECT NAME:
SOUTH FIRE STATION AND ADMINISTRATIVE BUILDING

PROJECT CIP: F077

2495 MURRIETA ROAD
PERRIS, CA 92585

ISSUE INFORMATION:

DATE:	INFORMATION:
11-26-25	95% CD SUBMITTAL
02-05-26	1st PC RESPONSE
02-19-26	2nd PC RESPONSE

SHEET INFORMATION:

STK PROJECT NO.: 365-03-25
SCALE: AS NOTED
DATE: NOVEMBER 2025
PLOT DATE: –
DRAWN BY: JG / JW

SEAL:

SHEET TITLE:
PLUMBING DETAILS CONT.

SHEET NO.:
P4.2

25-114

R:_PROJECT\2025\25-114 Home Fire Station_CAD\25-114 P-Details.dwg
4/14/2026 2:38PM

FIRE STATION - COLD WATER DIAGRAM

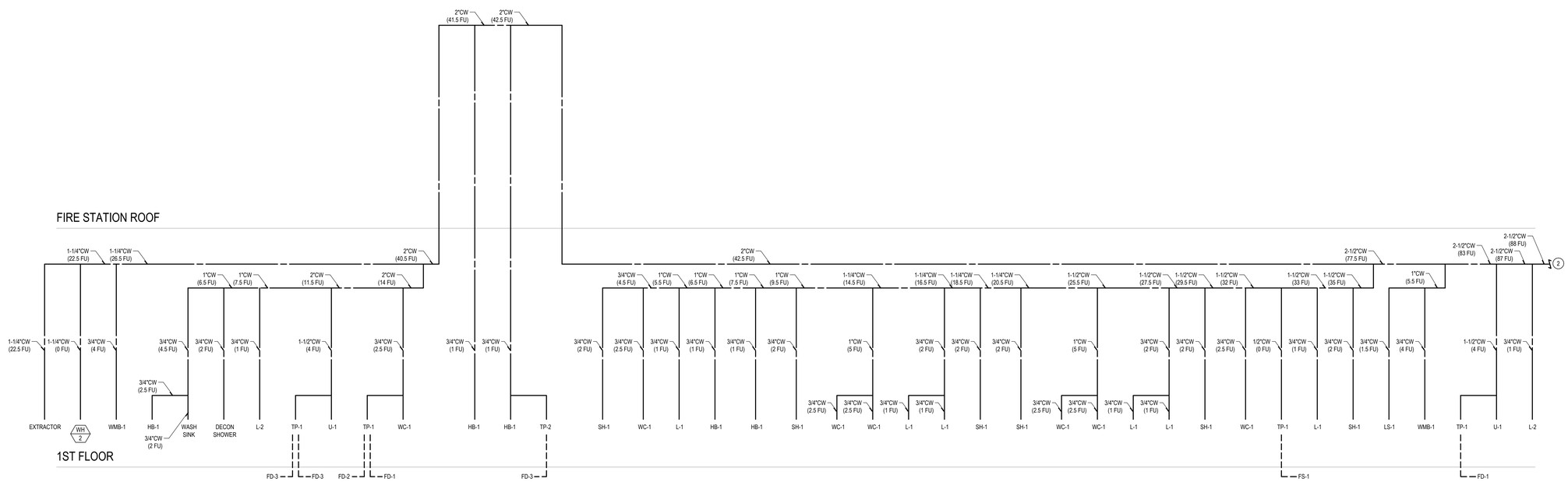

FIRE STATION - COLD WATER DIAGRAM CONT.

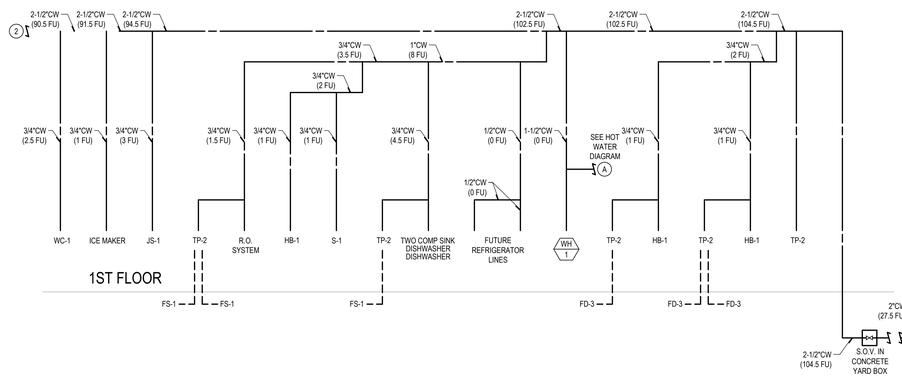

ADMIN BUILDING - COLD WATER DIAGRAM

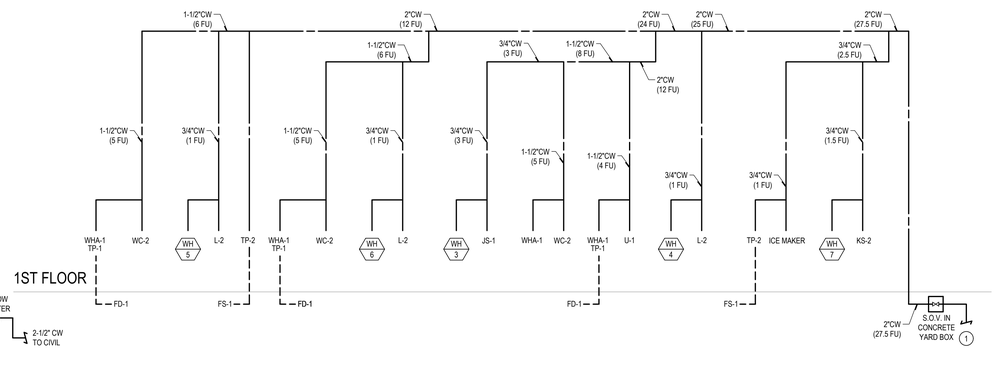

STK ARCHITECTURE, INC.
42095 ZEVO DR., TEMECULA, CALIFORNIA 92590-3780
Phone: 951.296.9110 Fax: 951.296.6079 Email: stk@stkinc.com

CONSULTANT:

REVIEWED FOR CODE COMPLIANCE

THESE DRAWINGS AND DOCUMENTS HAVE BEEN REVIEWED AND FOUND TO BE IN COMPLIANCE WITH THE 2022 CALIFORNIA BUILDING CODES. THIS REVIEW IS SUBJECT TO ALL CONDITIONS AND LIMITATIONS NOTED IN THE PLANS AND SPECIFICATIONS. THE BUILDING OFFICIAL AND THE DESIGN PROFESSIONAL IN RESPONSIBLE CHARGE RETAIN THE RIGHT TO REQUIRE ADDITIONAL INFORMATION AND TO IMPOSE ADDITIONAL REQUIREMENTS DEEMED NECESSARY DURING CONSTRUCTION TO SECURE COMPLIANCE WITH THE APPLICABLE CODES. THIS REVIEW DOES NOT AUTHORIZE VIOLATION OF ANY CODE REGULATION. CONTRACTOR OF RECORD IS RESPONSIBLE FOR CONSTRUCTION IN COMPLIANCE WITH APPROVED PLANS AND ALL APPLICABLE CODES. BUILDING OFFICIAL OR DESIGNATED REPRESENTATIVE MUST BE NOTIFIED FOR ALL REQUIRED INSPECTIONS.

BUILDING SAFETY DEPARTMENT

DESIGN WEST ENGINEERING
MECHANICAL / ELECTRICAL / ENERGY CONSULTANTS
BUILDING SERVICES SOLUTIONS INC.

REGISTERED PROFESSIONAL ENGINEER
No. 33209
SIGNED 04/14/2026
MECHANICAL
STATE OF CALIFORNIA

PROJECT ADMINISTERED BY:

CITY OF PERRIS

101 NORTH "D" STREET
PERRIS, CA 92570

PROJECT NAME:

SOUTH FIRE STATION AND ADMINISTRATIVE BUILDING

PROJECT CIP: F077

2495 MURRIETA ROAD
PERRIS, CA 92585

ISSUE INFORMATION:

DATE:	INFORMATION:
11–26–25	95% CD SUBMITTAL
02–05–26	1st PC RESPONSE
02–19–26	2nd PC RESPONSE

SHEET INFORMATION:

STK PROJECT NO.: 365–03–25
SCALE: AS NOTED
DATE: NOVEMBER 2025
PLOT DATE: --
DRAWN BY: JG / JW

SEAL:

SHEET TITLE:

PLUMBING RISER DIAGRAM - DOMESTIC COLD WATER

SHEET NO.:

P4.3

25-114

M:\PROJECTS\2025\25-114 Perris Fire Station_CAD\25-114 Fixtures.dwg
3/4/2026 3:38PM

WATER HEATER 1 - HOT WATER DIAGRAM

FIRE STATION ROOF

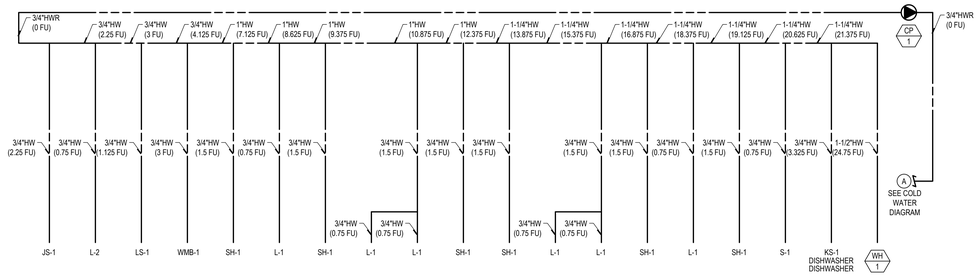

1ST FLOOR

WATER HEATER 2 HOT WATER DIAGRAM

FIRE STATION ROOF

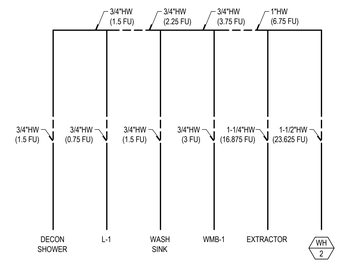

1ST FLOOR

WATER HEATER 3 HOT WATER DIAGRAM

ADMIN BUILDING ROOF

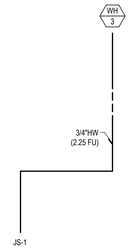

1ST FLOOR

WATER HEATER 4 HOT WATER DIAGRAM

ADMIN BUILDING ROOF

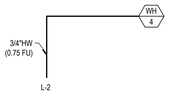

1ST FLOOR

WATER HEATER 5 HOT WATER DIAGRAM

ADMIN BUILDING ROOF

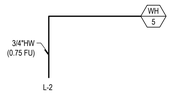

1ST FLOOR

WATER HEATER 6 HOT WATER DIAGRAM

ADMIN BUILDING ROOF

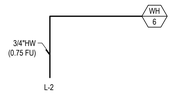

1ST FLOOR

WATER HEATER 7 HOT WATER DIAGRAM

ADMIN BUILDING ROOF

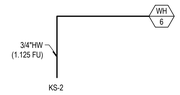

1ST FLOOR

STK ARCHITECTURE, INC.
42095 ZEVO DR., TEMECULA, CALIFORNIA 92590-3780
Phone: 951.296.9110 Fax: 951.296.6079 Email: stk@stkinc.com

CONSULTANT:

REVIEWED FOR CODE COMPLIANCE

THESE DESIGNS AND DOCUMENTS HAVE BEEN REVIEWED AND FOUND TO BE IN SUBSTANTIAL COMPLIANCE WITH THE 2025 CALIFORNIA BUILDING CODE. THIS REVIEW DOES NOT AUTHORIZE ANY VIOLATION OF THE 2025 CALIFORNIA BUILDING CODE OR ANY OTHER LAWS OR REGULATIONS. THE BUILDING OFFICIAL RETAINS THE RIGHT TO REQUIRE ADDITIONAL INFORMATION AND TO REQUIRE CORRECTIONS. YOUR CONTRACTOR OF RECORD IS RESPONSIBLE FOR CONSTRUCTION IN ACCORDANCE WITH THE APPROVED PLANS AND ALL APPLICABLE CODES. THE APPROVAL OF THESE PLANS DOES NOT PERMIT THE CONTRACTOR TO DEVIATE FROM THE APPROVED PLANS WITHOUT OBTAINING APPROVAL FOR THE CHANGES. IT IS THE CONTRACTOR'S RESPONSIBILITY TO OBTAIN ALL NECESSARY APPROVALS BEFORE PERFORMING ANY WORK THAT DEVIATES FROM THE APPROVED PLANS.

DESIGN WEST ENGINEERING
MECHANICAL/ELECTRICAL/ENERGY CONSULTANTS
DEPARTMENT: BUILDING ENERGY SOLUTIONS INC.

REGISTERED PROFESSIONAL ENGINEER
Stephen W. Jacobsen
No. 33209
SIGNED:04/14/2026
MECHANICAL
STATE OF CALIFORNIA

PROJECT ADMINISTERED BY:
CITY OF PERRIS

101 NORTH "D" STREET
PERRIS, CA 92570

PROJECT NAME:
SOUTH FIRE STATION AND ADMINISTRATIVE BUILDING

PROJECT CIP: F077

2495 MURRIETA ROAD
PERRIS, CA 92585

ISSUE INFORMATION:

DATE:	INFORMATION:
11-26-25	95% CD SUBMITTAL
02-05-26	1 1st PC RESPONSE
02-19-26	2 2nd PC RESPONSE

SHEET INFORMATION:

STK PROJECT NO.: 365-03-25
SCALE: AS NOTED
DATE: NOVEMBER 2025
PLOT DATE: --
DRAWN BY: JG / JW

SEAL:

SHEET TITLE:
PLUMBING RISER DIAGRAM - DOMESTIC HOT WATER

SHEET NO.:
P4.4

25-114

M:\PROJECTS\2025\25-114 Perris Fire Station_CAD\25-114 P Details.dwg
04/13/2026 3:08PM

FIRE STATION - WASTE AND VENT DIAGRAM

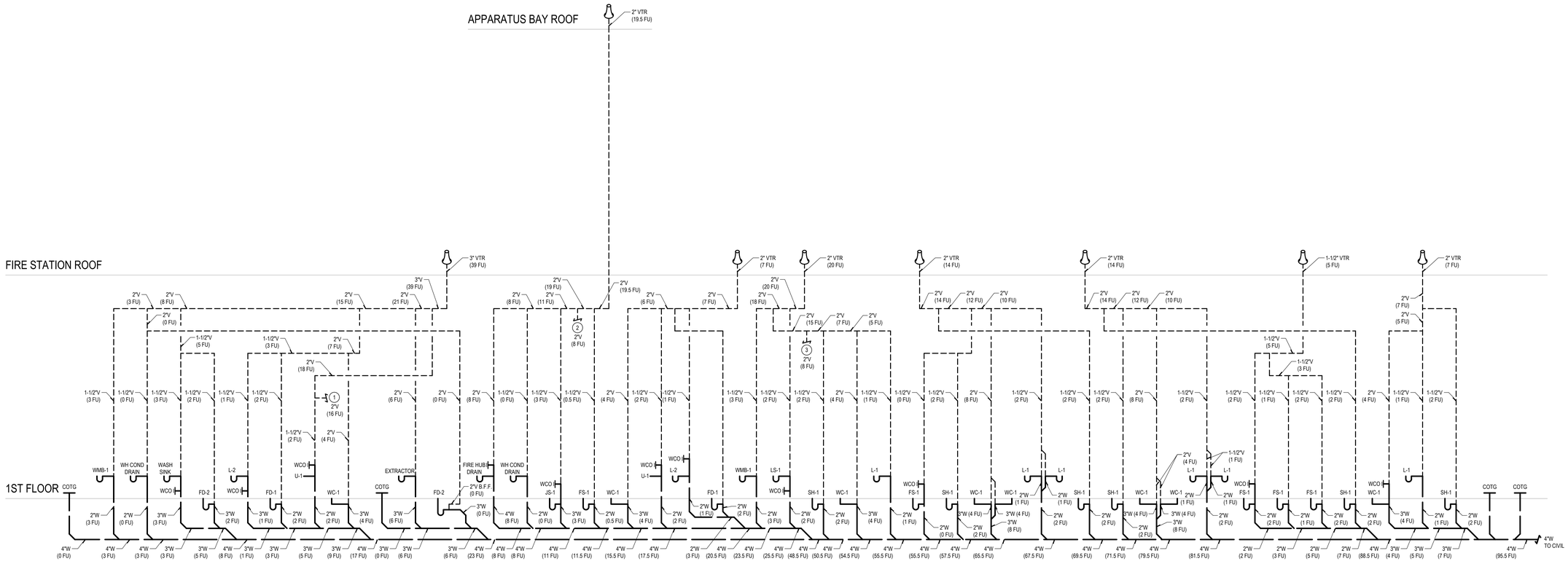

APPARATUS BAY - WASTE AND VENT DIAGRAM

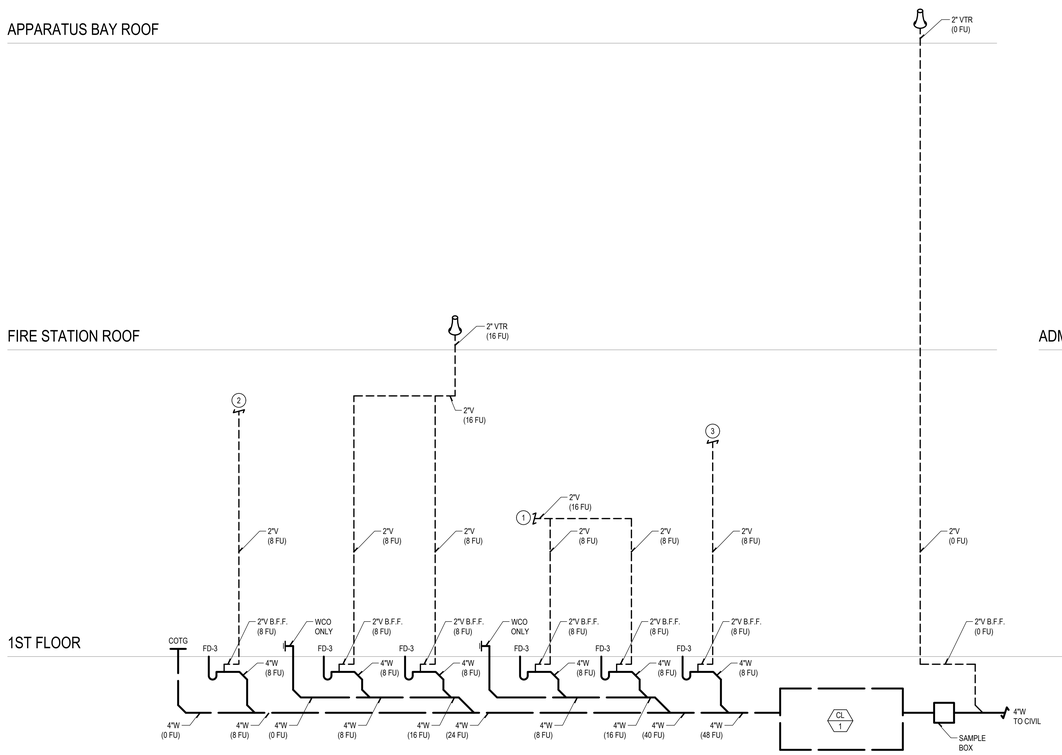

ADMIN BUILDING - WASTE AND VENT DIAGRAM

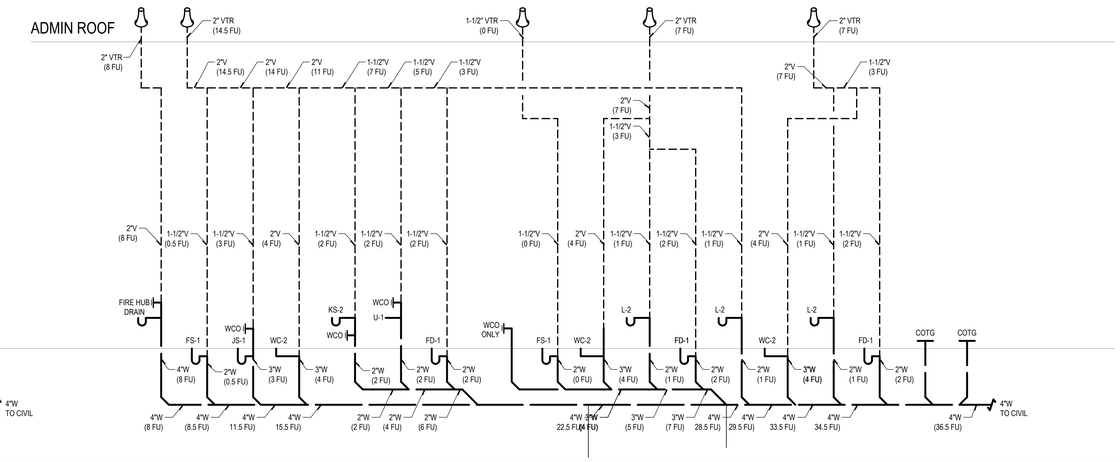

STK ARCHITECTURE, INC.
42095 ZEVO DR., TEMECULA, CALIFORNIA 92590-3780
Phone: 951.296.9110 Fax: 951.296.6079 Email: stk@stkinc.com

CONSULTANT:

REVIEWED FOR CODE COMPLIANCE

DESIGN WEST ENGINEERING
MECHANICAL • ELECTRICAL • ENERGY CONSULTANTS
SOLUTIONS INC.

REGISTERED PROFESSIONAL ENGINEER
No. 33209
SIGNED 04/14/2026
MECHANICAL
STATE OF CALIFORNIA

PROJECT ADMINISTERED BY:

CITY OF PERRIS

101 NORTH "D" STREET
PERRIS, CA 92570

PROJECT NAME:

SOUTH FIRE STATION AND ADMINISTRATIVE BUILDING

PROJECT CIP: F077

2495 MURRIETA ROAD
PERRIS, CA 92585

ISSUE INFORMATION:

DATE:	INFORMATION:
11-26-25	95% CD SUBMITTAL
02-05-26	1st PC RESPONSE
02-19-26	2nd PC RESPONSE

SHEET INFORMATION:

STK PROJECT NO.: 365-03-25
SCALE: AS NOTED
DATE: NOVEMBER 2025
PLOT DATE: –
DRAWN BY: JG / JW

SEAL:

SHEET TITLE:

PLUMBING RISER DIAGRAM - WASTE & VENT

SHEET NO.:

P4.5

25-114

STATE OF CALIFORNIA

Domestic Water Heating System

CALIFORNIA ENERGY COMMISSION

CERTIFICATE OF COMPLIANCE			NRCC-PLB-E
This document is used to demonstrate compliance for nonresidential occupancies with requirements in 110.1, 110.3, 120.3, and 140.5, and with requirements in 141.0 for additions and alterations, for domestic water heating scopes using the prescriptive path. For high-rise residential and hotel/motel occupancies compliance is demonstrated with requirements in 110.1, 110.3, 160.4 and 170.2(d), and with requirements 180.1 for additions and 180.2 for alterations.			
Project Name: Perris Fire Station		**Report Page:**	**(Page 1 of 9)**
Project Address:	101 North D Street	**Date Prepared:**	11/25/2025

A. GENERAL INFORMATION

01	Project Location (city)	Perris	02	Climate Zone	10
03	Occupancy Types Within Project (select all that apply):				
• Gymnasium • Hotel/Motel • Office • Parking Garage • Support Areas					

B. PROJECT SCOPE

This table includes domestic water heating systems that are within the scope of the permit application and are demonstrating compliance using the prescriptive paths outlined in 140./ 170.2(d) and 141.0(a)/ 180.1, or 141.0(b)2N / 180.2 for additions or alterations. Solar water heating systems are documented on the NRCC-SAB compliance document. Combined hydronic water heating systems are documented on the NRCC-MCH compliance document.

01	02	03		
My project consists of (check all that apply):	System Type[1,2]	System Components		
☒ New system (DHW system being installed for the first time)	Individual System (serving nonresidential spaces)	☒ Equipment	☒ Distribution	☒ Controls
☒ New system (DHW system being installed for the first time)	Individual Dwelling Units System(s)	☒ Equipment	☒ Distribution	☒ Controls
☒ New system (DHW system being installed for the first time)	Individual System (serving nonresidential spaces)	☒ Equipment	☒ Distribution	☒ Controls
☒ New system (DHW system being installed for the first time)	Individual System (serving nonresidential spaces)	☒ Equipment	☒ Distribution	☒ Controls
☐ System Alteration (equipment, distribution or controls)		☐ Equipment	☐ Distribution	☐ Controls

[1]FOOTNOTES: Point of use water heaters, or other non-central systems used to serve nonresidential spaces, are considered individual systems.
[2] Dwelling units refers to hotel/motel guest rooms and units in a multifamily residential occupancy.
[3] DHW systems serving 2 or more dwelling units are considered "Central Systems" for multifamily occupancies

C. COMPLIANCE RESULTS

Table C will indicate if the project data input into the compliance document is compliant with water heating requirements. If this table says "DOES NOT COMPLY" or "COMPLIES with Exceptional Conditions" refer to Table D. or the table indicated as not compliant for guidance.

01	02	03	04
Domestic Hot Water Equipment	Distribution Systems	Controls	**Compliance Results**
Table F	Table G	Table H	
Yes	Yes	Yes	COMPLIES

STATE OF CALIFORNIA

Domestic Water Heating System

CALIFORNIA ENERGY COMMISSION

CERTIFICATE OF COMPLIANCE		NRCC-PLB-E
Project Name: Perris Fire Station	**Report Page:**	**(Page 2 of 9)**
	Date Prepared:	11/25/2025

D. EXCEPTIONAL CONDITIONS

This table is auto-filled with uneditable comments because of selections made or data entered in tables throughout the form.

E. ADDITIONAL REMARKS

This table includes remarks made by the permit applicant to the Authority Having Jurisdiction.

STATE OF CALIFORNIA

Domestic Water Heating System

CALIFORNIA ENERGY COMMISSION

CERTIFICATE OF COMPLIANCE		NRCC-PLB-E
Project Name: Perris Fire Station	**Report Page:**	**(Page 3 of 9)**
	Date Prepared:	11/25/2025

F. DOMESTIC HOT WATER EQUIPMENT

This table is used to demonstrate compliance with mandatory equipment requirements in 110.1 and 110.3. Compliance with prescriptive requirements in 140.5(c) / 170.2(d) must also be demonstrated and with 141.0 / 180.1/ 180.2 for addition and alteration scopes.

Equipment Schedule: Water Heating Efficiency and Standby Loss

03		04		05		06		
System Name	AO Smith BTH 150	Exception to 140.5(c)/ 170.2(d)3		☐	Gas Service Water Heating System >= 1MMBtu/h[1]	Capacity-weighted Average Efficiency %		

07	08	09	10		11	12	13	14	15
Name or Item Tag	Equipment Type	Volume (gal)	Rated Input Capacity (Btu/h)	Max GPM/ First Hour Rating (FHR)	Rated Efficiency	Minimum Efficiency Required	Efficiency Unit	Designed Standby Loss	Maximum Standby Loss
AO Smith BTH 150	Commercial Package Gas Hot Water Supply Boilers (300k - <1MMBtu/h)	100	150,000	FHR >=75	0.62	0.57	UEF		

03		04		05		06		
System Name	CM-20L & 40L	Exception to 140.5(c)/ 170.2(d)3		☐	Gas Service Water Heating System >= 1MMBtu/h[1]	Capacity-weighted Average Efficiency %		

07	08	09	10		11	12	13	14	15
Name or Item Tag	Equipment Type	Volume (gal)	Rated Input Capacity (Btu/h)	Max GPM/ First Hour Rating (FHR)	Rated Efficiency	Minimum Efficiency Required	Efficiency Unit	Designed Standby Loss	Maximum Standby Loss
CM-20L & 40L	Consumer Rated Electric Instantaneous (<=12kW)	0	17,743	FHR >=75	0.99	0.91	UEF		

STATE OF CALIFORNIA

Domestic Water Heating System

CALIFORNIA ENERGY COMMISSION

CERTIFICATE OF COMPLIANCE		NRCC-PLB-E
Project Name: Perris Fire Station	**Report Page:**	**(Page 4 of 9)**
	Date Prepared:	11/25/2025

F. DOMESTIC HOT WATER EQUIPMENT

03		04		05		06		
System Name	AO SMITH EJC-6	Exception to 140.5(c)/ 170.2(d)3		☐	Gas Service Water Heating System >= 1MMBtu/h[1]	Capacity-weighted Average Efficiency %		

07	08	09	10		11	12	13	14	15
Name or Item Tag	Equipment Type	Volume (gal)	Rated Input Capacity (Btu/h)	Max GPM/ First Hour Rating (FHR)	Rated Efficiency	Minimum Efficiency Required	Efficiency Unit	Designed Standby Loss	Maximum Standby Loss
AO SMITH EJC-6	Consumer Rated Electric Storage	6	10,237	0 <= FHR <18	0.93	0.93	UEF		

[1]FOOTNOTE: In systems >= 1MMBtu/h with multiple units, gas water heaters with input capacity > 100,000 Btu/h may meet 90% Et requirements via an input capacity-weighted average.

Water Heating Equipment in Individual Dwelling Units[1]

Equipment Type (select all that apply):

16	☐	Gas/propane instantaneous water heater with input rating <= 200,000 BTUH and no storage tank. Note: Can not comply using the prescriptive path with a storage tank per 170.2(d)1C (New Construction and Additions Only)
	☐	A single 240 volt heat pump water heater serving the dwelling unit. (New Construction and Additions only)
	☐	A single heat pump water heater that meets the requirements of NEEA Advanced Water Heater Specification Tier 3 or higher.
	☐	A single heat pump water heater with storage tank located in the garage or conditioned space and be placed on an incompressible, rigid insulated surface with minimum R-10. The water heater shall be installed with a communication interface that meets either the requirements of 110.12(a) or has a ANSI/CTA-2045-B communication port (Alterations Only)
	☐	If the existing water heater is an electric resistance water heater, a consumer electric water heater (Alterations Only)
	☐	Replacement or altered gas or propane water heater (Alterations Only)

	Yes	No	Not Applicable	Requirement
17				

[1]FOOTNOTE: Dwelling Units refers to hotel/motel guest rooms and units in a multifamily residential occupancy.

STATE OF CALIFORNIA

Domestic Water Heating System

CALIFORNIA ENERGY COMMISSION

CERTIFICATE OF COMPLIANCE		NRCC-PLB-E
Project Name: Perris Fire Station	**Report Page:**	**(Page 5 of 9)**
	Date Prepared:	11/25/2025

F. DOMESTIC HOT WATER EQUIPMENT

Water Heating Equipment All Occupancies

	Yes	No	Not Applicable	Requirement
18	☐	☐	☒	Unfired storage tank insulation shall have Internal + External >=R-16 OR External >=R-3.5. Label required per 110.3(c)3
19	☐	☐	☒	New state buildings 60% of energy for service water heating from site solar energy or recovered energy per 110.3(c)5
20	☒	☐	☐	Isolation valves for instantaneous water heater with input rating >6.8 kBTUH or 2 kW has been specified per 110.3(c)6
21	☐	☐	☒	School buildings < 25,000 ft^2 and < 4 stories must install a heat pump water heating system per 140.5(a)1. Water heating systems serving an individual bathroom space may be an instantaneous electric water heater.

G. DOMESTIC HOT WATER DISTRIBUTION SYSTEM

This table is used to demonstrate compliance for nonresidential occupancies with distribution requirements in 120.3 and 140.5. For multifamily and hotel/motel occupancies, compliance is demonstrated with requirements 110.3(c), 160.4, 170.2(d).

Distribution of Individual System(s) Serving Dwelling Units

	Yes	No	Not Applicable	Requirement
10	○	○	●	Single 240 volt heat pump water heaters serving dwelling units must also include systems with: • Compact hot water distribution system as specified in Reference Appendix RA4.4.16 in climate zones 1 and 16; AND • A drain water heat recovery system that is field verified by a HERS rater per Reference Appendix RA3.6.9 in climate zone 16
11	●	○	○	A drain water heat recovery system that is field verified by a HERS rater per Reference Appendix RA3.6.9 in climate zone 16
12	●	○	○	For recirculation distribution systems serving individual dwelling units, only Demand Recirculation Systems with manual on/off control as specified in the Reference Appendix RA4.4.9 shall be used.

STATE OF CALIFORNIA

Domestic Water Heating System

CALIFORNIA ENERGY COMMISSION

CERTIFICATE OF COMPLIANCE		NRCC-PLB-E
Project Name: Perris Fire Station	**Report Page:**	**(Page 6 of 9)**
	Date Prepared:	11/25/2025

G. DOMESTIC HOT WATER DISTRIBUTION SYSTEM

Mandatory Pipe Insulation All Occupancies

13	☒	For systems serving dwelling units, pipe insulation must meet the minimum insulation requirements in Table 160.4-A (see blow) except: • Piping that penetrates framing members shall not be required to have pipe insulation for the distance of the framing penetration. Piping that penetrates metal framing shall use grommets, plugs, wrapping or other insulating material to assure that no contact is made with the metal framing. Insulation shall abut securely against all framing members • Piping installed in interior or exterior walls shall not be required to have pipe insulation if all of the requirements are met for compliance with Quality Insulation Installation (QII) as specified in the Reference Residential Appendix RA3.5. • Piping surrounded with a minimum of 1 inch of wall insulation, 2 inches of crawlspace insulation, or 4 inches of attic insulation, shall not be required to have pipe insulation.
14	☒	For systems serving nonresidential spaces, pipe insulation for the following applications is specified to comply with Table 120.3-A (see below) per 120.3: • Recirculating system piping, including supply and return piping of the water heater • The first 8 ft of hot and cold outlet piping, including between storage tank and heat trap, for a nonrecirculating storage system • Pipes that are externally heated
15	☒	Insulation shall be protected from damage, including that due to sunlight, moisture, equipment maintenance, and wind. Insulation exposed to weather shall be installed with a cover suitable for outdoor service per 120.3(b) / 160.4(f). Pipe insulation buried below grade must be installed in a water proof and non-crushable casing or sleeve.

TABLE 120.3-A / 160.4-A PIPE INSULATION THICKNESS

Fluid Temperature Range (°F)	Conductivity Range (Btu-in per hour per ft^2 per °F)	Insulation Mean Rating Temp (°F)	Nominal Pipe Diameter (in)			
			< 1	1 to < 1.5	1.5 to < 4	1.5 to < 4 Multifamily & Hotel/Motel
			Minimum Insulation Required			
105-140	0.22 - 0.28	100	1.0 in or R-7.7	1.5 in or R-12.5	1.5 in or R-11	2.0 in or R-16

STATE OF CALIFORNIA

Domestic Water Heating System

CALIFORNIA ENERGY COMMISSION

CERTIFICATE OF COMPLIANCE		NRCC-PLB-E
Project Name: Perris Fire Station	**Report Page:**	**(Page 7 of 9)**
	Date Prepared:	11/25/2025

H. DOMESTIC HOT WATER CONTROLS

This table is used to demonstrate compliance with control requirements in 110.3 for all occupancies. For multifamily residential and hotel/motel occupancies, compliance is also demonstrated with requirements in 160.4(e) / 170.2(d).

	Yes	No	Not Applicable	Requirement
01	☒	☐	☐	Construction documents require manufacturer certification that service water-heating systems are equipped with automatic temperature controls capable of adjusting temperature settings per 110.3(a).
02	☐	☐	☒	Systems with capacity > 167,000 BTUH equipped with outlet temperature controls per 110.3(c)1 unless covered by California Plumbing Code 613.0.
03	☐	☐	☒	Controls for circulating pumps or electrical heat trace systems are capable of automatically turning off the system per §110.3(c)2 unless systems serves healthcare facility.
04	☐	☐	☒	For recirculation systems serving multiple dwelling units, design includes automatic pump controls per 170.2(d) or 180.1(b)3 for additions.
05	☐	☐	☒	For recirculation systems serving individual dwelling units, design includes manual on/off controls as specified in Reference Appendix RA4.4.9 per 170.2(d).
06	☐	☐	☒	Combustion air positive shut-off shall be provided per 160.4(3).on all newly installed commercial boilers as follows: • Boilers with input capacity >= 2.5 MMBtu/h, in which the boiler is designed to operate with a nonpositive vent static pressure • Boilers where one stack serves two or more boilers with a total combined input capacity per stack of 2.5 MMBtu/h.
07	☐	☐	☒	Boiler combustion air fans with motor >= 10 hp shall meet one of the following • The fan motor shall be driven by a variable speed drive OR • The fan motor shall include controls that limit the fan motor demand to <=30% of the total design wattage at 50% of the design air volume.
08	☐	☐	☒	Newly installed boilers with an input capacity {d:gte/] 5MMBtu/h and a steady state full-load combustion efficiency < 90% shall maintain excess (stack-gas) oxygen concentrations <= 5% by volume on a dry basis over firing rates of 20-100%. Combustion air volume shall be controlled with respect to firing rate or flue gas oxygen concentration. Use of a common gas and combustion air control linkage or jack shaft is prohibited.

STATE OF CALIFORNIA

Domestic Water Heating System

CALIFORNIA ENERGY COMMISSION

CERTIFICATE OF COMPLIANCE		NRCC-PLB-E
Project Name: Perris Fire Station	**Report Page:**	**(Page 8 of 9)**
	Date Prepared:	11/25/2025

I. DECLARATION OF REQUIRED CERTIFICATES OF INSTALLATION

Selections have been made based on information provided in this document. If any selection have been changed by permit applicant, an explanation should be included in Table E. Additional Remarks. These documents must be provided to the building inspector during construction and can be found online

Form/Title
NRCI-PLB-E - Must be submitted for all buildings

J. DECLARATION OF REQUIRED CERTIFICATES OF ACCEPTANCE

There are no forms required for this project.

K. DECLARATION OF REQUIRED CERTIFICATES OF VERIFICATION

There are no forms required for this project.

STATE OF CALIFORNIA

Domestic Water Heating System

CALIFORNIA ENERGY COMMISSION

CERTIFICATE OF COMPLIANCE			NRCC-PLB-E
Project Name: Perris Fire Station		**Report Page:**	**(Page 9 of 9)**
Project Address:	101 North D Street	**Date Prepared:**	11/25/2025

DOCUMENTATION AUTHOR'S DECLARATION STATEMENT

I certify that this Certificate of Compliance documentation is accurate and complete.

Documentation Author Name: Steve Johnson	Documentation Author Signature: Steven Johnson
Company: Design West Engineering	Signature Date: 2025-11-25
Address: 412 E. Vanderbilt Way	CEA/ HERS Certification Identification (if applicable): 33209
City/State/Zip: San Bernardino CA 92408	Phone: 909-890-3700

RESPONSIBLE PERSON'S DECLARATION STATEMENT

I certify the following under penalty of perjury, under the laws of the State of California:

1. The information provided on this Certificate of Compliance is true and correct.
2. I am eligible under Division 3 of the Business and Professions Code to accept responsibility for the building design or system design identified on this Certificate of Compliance (responsible designer)
3. The energy features and performance specifications, materials, components, and manufactured devices for the building design or system design identified on this Certificate of Compliance conform to the requirements of Title 24, Part 1 and Part 6 of the California Code of Regulations.
4. The building design features or system design features identified on this Certificate of Compliance are consistent with the information provided on other applicable compliance documents, worksheets, calculations, plans and specifications submitted to the enforcement agency for approval with this building permit application.
5. I will ensure that a completed signed copy of this Certificate of Compliance shall be made available with the building permit(s) issued for the building, and made available to the enforcement agency for all applicable inspections. I understand that a completed signed copy of this Certificate of Compliance is required to be included with the documentation the builder provides to the building owner at occupancy.

Responsible Designer Name: Steven Johnson	Responsible Designer Signature: Steven Johnson
Company: Design West Engineering	Date Signed: 2025-11-25
Address: 412 East Vanderbilt Way	License: 33209
City/State/Zip: San Bernardino CA 92408	Phone: 909-890-3700

STK ARCHITECTURE, INC.
42095 ZEVO DR., TEMECULA, CALIFORNIA 92590-3780
Phone: 951.296.9110 Fax: 951.296.6079 Email: stk@stkinc.com

CONSULTANT:
REVIEWED FOR CODE COMPLIANCE
BUILDING BUREAU SOLUTIONS INC.
DESIGN WEST ENGINEERING
MECHANICAL • ELECTRICAL • ENERGY CONSULTANTS
Email: code@designwesteng.com
REGISTERED PROFESSIONAL ENGINEER STEVEN M. JOHNSON No. 33209 SIGNED:04/14/2026 MECHANICAL STATE OF CALIFORNIA

PROJECT ADMINISTERED BY:
CITY OF PERRIS

101 NORTH "D" STREET
PERRIS, CA 92570

PROJECT NAME:
SOUTH FIRE STATION AND ADMINISTRATIVE BUILDING

PROJECT CIP: F077

2495 MURRIETA ROAD
PERRIS, CA 92585

ISSUE INFORMATION:

DATE:	INFORMATION:
11-26-25	95% CD SUBMITTAL
02-05-26	△1 1st PC RESPONSE
02-19-26	△2 2nd PC RESPONSE

SHEET INFORMATION:

STK PROJECT NO.:	365-03-25
SCALE:	AS NOTED
DATE:	NOVEMBER 2025
PLOT DATE:	–
DRAWN BY:	JG / JW

SEAL:

SHEET TITLE:
ENERGY COMPLIANCE DOCUMENTS

SHEET NO.:
P-4.6

25-114

04/14/2026 6:38PM R:_PROJECT\2025\25-114 Perris Fire Station_CAD\25-114 P-Details.dwg

CAL GREEN GENERAL NOTES

1. AT THE TIME OF ROUGH INSTALLATION, OR DURING STORAGE ON THE CONSTRUCTION SITE AND UNTIL FINAL STARTUP OF THE HEATING AND COOLING EQUIPMENT, ALL DUCT AND OTHER RELATED AIR DISTRIBUTION COMPONENT OPENINGS SHALL BE COVERED WITH TAPE, PLASTIC, SHEET METAL OR OTHER METHODS ACCEPTABLE TO THE ENFORCING AGENCY TO REDUCE THE AMOUNT OF DUCT OR DEBRIS WHICH MAY COLLECT IN THE SYSTEM.

2. ADHESIVES, SEALANTS, AND CAULKS USED ON THE PROJECT SHALL MEET THE REQUIREMENTS OF THE FOLLOWING STANDARDS:

   A. ADHESIVES, ADHESIVE BONDING PRIMERS, ADHESIVE PRIMERS, SEALANTS, SEALANTS PRIMERS AND CAULKS SHALL COMPLY WITH LOCAL OR REGIONAL AIR POLLUTION CONTROL OR AIR QUALITY MANAGEMENT DISTRICT RULES WHERE APPLICABLE, OR SCAQMD RULE 1168 VOC LIMITS, AS SHOWN IN TABLES 5.504.4.1 AND 5.504.4.2. SUCH PRODUCTS ALSO SHALL COMPLY WITH THE RULE 1168 PROHIBITION ON THE USE OF CERTAIN TOXIC COMPOUNDS (CHLOROFORM, ETHYLENE, DICHLORIDE, ETHYLENE CHLORIDE, PERCHLOROETHYLENE, AND TRICHLOROETHYLENE), EXCEPT FOR AEROSOL PRODUCTS AS SPECIFIED IN SUBSECTION 2 BELOW.

   B. AEROSOL ADHESIVE, AND SMALLER UNIT SIZES OF ADHESIVES, AND SEALANT OR CAULKING COMPOUNDS (IN UNITS OF PRODUCT, LESS PACKAGING, WHICH DO NOT WEIGH MORE THAN ONE POUND AND DO NOT CONSIST OF MORE THAN 16 FLUID OUNCES) SHALL COMPLY WITH STATEWIDE VOC STANDARDS AND OTHER REQUIREMENTS, INCLUDING PROHIBITIONS ON USE OF CERTAIN TOXIC COMPOUNDS, OF CALIFORNIA CODE OF REGULATIONS, TITLE 17 COMMENCING WITH SECTION 94507.

3. IN MECHANICALLY VENTILATED BUILDINGS, PROVIDE REGULARLY OCCUPIED AREAS OF THE BUILDING WITH AIR FILTRATION MEDIA FOR OUTSIDE AND RETURN AIR THAT PROVIDES AT LEAST A MINIMUM EFFICIENCY REPORTING VALUE (MERV) OF 13. MERV 13 FILTERS SHALL BE INSTALLED PRIOR TO OCCUPANCY, AND RECOMMENDATIONS FOR MAINTENANCE WITH FILTERS OF THE SAME VALUE SHALL BE INCLUDED IN THE OPERATIONS AND MAINTENANCE MANUAL.

   EXCEPTIONS:

   C. AN ASHRAE 10-PERCENT TO 15-PERCENT EFFICIENCY FILTER SHALL BE PERMITTED FOR AN HVAC UNIT MEETING THE 2022 CALIFORNIA ENERGY CODE HAVING 60,000 BTU/H OR LESS CAPACITY PER FAN COIL, IF THE ENERGY USE OF THE AIR DELIVERY SYSTEM IS 0.4 W/CFM OR LESS AT DESIGN AIR FLOW.

   D. EXISTING MECHANICAL EQUIPMENT.

   5.504.5.3.1 LABELING, INSTALLED FILTERS SHALL BE CLEARLY LABELED BY THE MANUFACTURER INDICATING MERV RATING.

4. BUILDINGS SHALL MEET OR EXCEED THE PROVISIONS OF CALIFORNIA BUILDING CODE, CCR, TITLE 24, PART 2, SECTIONS 1203 (VENTILATION) AND CHAPTER 14 (EXTERIOR WALLS). FOR CONDITIONAL MEASURES NOT APPLICABLE TO LOW RISE RESIDENTIAL OCCUPANCIES, SEE SECTION 5.407.2 OF THIS CODE.

5. FOR MECHANICALLY OR NATURALLY VENTILATED SPACES IN BUILDINGS, MEET THE MINIMUM REQUIREMENTS OF SECTION 120.1 (REQUIREMENTS FOR VENTILATION) OF THE 2022 CALIFORNIA ENERGY CODE, OR THE APPLICABLE LOCAL CODE, WHICHEVER IS MORE STRINGENT, AND THE DIVISION 1, CHAPTER 4 OF CCR, TITLE 8.

6. INSTALLATIONS OF HVAC, REFRIGERATION EQUIPMENT SHALL COMPLY WITH 5.508.1.1 AND 5.508.1.2, ADDRESSING THAT ALL REFRIGERATION IN HVAC EQUIPMENT SHALL NOT CONTAIN CFCS AND/OR HALONS.

MECHANICAL BASIS OF DESIGN

A. OUTDOOR DESIGN CONDITIONS:
   1. SUMMER: 105°F DB/68°F WB
   2. WINTER: 22°F

B. DESIGN CONDITIONS:

OCCUPANT SPACE	OCC DENSITY	LIGHTING DENSITY	COOLING TEMPERATURE	HEATING TEMPERATURE	RELATIVE HUMIDITY	VENTILATION PER OCCUPANT
OFFICE	100 SF/OCC	0.7 W/SF	74°F +/- 2°F	70°F +/- 2°F	50%	15 CFM/OCC
LOBBY	15 SF/OCC	0.85 W/SF	74°F +/- 2°F	70°F +/- 2°F	50%	15 CFM/OCC
ELECTRICAL ROOM	N/A	N/A	90°F MAX	N/A	N/A	N/A
DATA/ TELECOM	N/A	N/A	78°F MAX	N/A	N/A	N/A

C. HVAC CONTROL METHOD:
   1. PROGRAMMABLE WIFI ENABLED STAND ALONG THERMOSTAT
   2. ENERGY MANAGEMENT SYSTEM (EMS) CONTROL OF ALL EQUIPMENT.
   3. TIE-IN TO CAMPUS EMS
   4. ELECTRICAL ROOM TO HAVE TEMPERATURE MONITORING ONLY

D. CALIFORNIA VENTILATION CRITERIA:
   1. COMPLY WITH CALIFORNIA BUILDING ENERGY EFFICIENCY STANDARD.
      A. GREATER OF 15 CFM/PERSON OR 0.15 CFM/SF

E. EXHAUST TO OUTDOORS (MINIMUM RATES)
   1. RESTROOMS: 75 CFM/(WC or U)
   2. RESTROOMS: AIR CHANGE EVERY 5 MINUTES

F. BUILDING ENVELOPE:
   1. REFER TO THE ARCHITECTURAL DRAWINGS AND SPECIFICATIONS FOR ENVELOPE REQUIREMENTS
   2. ALL ENVELOPE COMPONENTS SHALL MEET CALIFORNIA ENERGY CODE MINIMUM PRESCRIPTIVE CRITERIA.

G. DUCTWORK DESIGN CRITERIA (MAXIMUM ALLOWABLE AIR PRESSURE DROPS AND AIR VELOCITIES) TO MEET HIGH EFFICIENCY OPERATION WITH MINIMAL ACOUSTICAL NOISE. DUCT STATIC PRESSURE FRICTION LOSS SHALL NOT EXCEED 0.2" PER 100 FEET IN MECHANICAL ROOMS AND SHAFTS. LOW PRESSURE SUPPLY AND EXHAUST DUCT STATIC PRESSURE FRICTION LOSS BASED ON A MAXIMUM OF 0.08" PER 100 FEET. LOW PRESSURE RETURN DUCT STATIC PRESSURE FRICTION LOSS BASED ON A MAXIMUM OF 0.05" PER 100 FEET. MEDIUM PRESSURE DUCTWORK SHALL NOT EXCEED MAXIMUM VELOCITY AS LISTED BELOW.
   1. IN ADDITION, MAXIMUM SUPPLY, RETURN AND EXHAUST DUCT AIR FLOW VELOCITIES, REGARDLESS OF PRESSURE DROP, SHALL NOT EXCEED THE FOLLOWING CRITERIA:
      A. MAINS ABOVE CEILING: 1750 FPM
      B. MAINS ABOVE OPEN OCCUPIED SPACES: 1450 FPM
      C. BRANCHES ABOVE CEILING: 1400 FPM
      D. BRANCHES ABOVE OPEN OCCUPIED SPACES: 1150 FPM
      E. RUN-OUTS TO DIFFUSERS: 725 FPM
      F. IN SHAFTS: 2500 FPM
      G. IN MECHANICAL ROOMS: 3000 FPM

H. ACOUSTICAL
   1. THE FOLLOWING NOISE NC/RC CRITERIA LEVELS WILL BE DESIGNED AS DEFINED IN THE ASHRAE HVAC APPLICATIONS HANDBOOK. THESE LEVELS ADDRESS THE MECHANICAL SYSTEMS ONLY. ACTUAL SOUND PERFORMANCE REQUIREMENTS FOR EACH SPACE MUST BE VERIFIED WITH ACOUSTICAL CONSULTANT.
      A. CORRIDORS AND LOBBIES: 40
      B. OFFICES: 30

I. SEISMIC:
   1. ANCHORAGE AND RESTRAINTS ARE A DEFERRED SUBMITTAL BY THE CONTRACTOR AND MUST BE COORDINATED WITH STRUCTURAL ENGINEER AND AUTHORITY HAVING JURISDICTION.

AIR DISTRIBUTION SCHEDULE

SYMBOL	DESCRIPTION	MANUFACTURER & MODEL NO.	FINISH	LOCATION	ACCESSORIES
CDP	CEILING DIFFUSER PERORATED COVER W/ MODULAR CORE SUPPLY	TITUS MODEL PMC	WHITE POWDER COAT	ALL ELSE	ROUND TO SQUARE ADAPTER
CD	CEILING DIFFUSER MODULAR CORE SUPPLY	TITUS MODEL MCD	WHITE POWDER COAT	ALL ELSE	
CE / CR	CEILING REGISTER PERFORATED	TITUS PAR	WHITE POWDER COAT	ALL ELSE	
SG	SUPPLY SIDEWALL GRILLE	TITUS 300	WHITE POWDER COAT	ALL	
RG / EG	RETURN SIDEWALL GRILLE	TITUS 350RL	WHITE POWDER COAT	ALL	-
STG	SIDEWALL TRANSFER GRILLE	TITUS 350RL	WHITE POWDER COAT	APPARATUS	-

NOTES:
1. AT ALL HARD LID CEILINGS, CONTRACTOR SHALL PROVIDE FOR "MAT" CABLE DRIVEN DAMPERS. MODEL RT-150. CABLE SHALL BE ROUTED BEHIND GRILLE OPENING AND INSTALLED PER MANUFACTURER'S REQUIREMENTS.
2. NO OPPOSED BLADE DAMPERS SHALL BE USED.

REFRIGERANT PIPE INSULATION SCHEDULE

REFRIGERANT CONDITION OR PHASE	FLUID TEMPERATURE RANGE (°F)	CONDUCTIVITY RANGE (IN BTU-IN/HR PER SQFT/°F)	INSULATION MEAN RATING TEMPERATURE (°F)	PIPE SIZE (IN. DIA.) 1 to < 1.5	1.5 to < 4	4 to < 8
				REQUIRED INSULATION THICKNESS (IN.)		
SPACE HEATING, HOT WATER SYSTEMS (STEAM, STEAM CONDENSATE, CONDENSATE AND HOT WATER) AND SERVICE WATER HEATING SYSTEMS						
HIGH PRESSURE VAPOR (HP GAS)	201° - 250°	0.25 - 0.29	150°	2.5	2.5	2.5
	141° - 200°		125°	1.5	1.5	2.0
LIQUID	105° - 140°	0.22 - 0.28	100°	1.0	1.5	1.5
	40°60°	0.21 - 0.27	75°	1.0	1.0	1.0
LOW PRESSURE VAPOR (GAS)	40° - 60°	0.20 - 0.26	75°	0.5	1.0	1.0
	BELOW 40°		50°	1.0	1.5	1.5

NOTE:
1. WHERE INSULATED PIPING IS EXPOSED OUTDOORS, IT SHALL BE COVERED. COVER OUTDOOR EXPOSED INSULATED PIPING WITH 0.016 INCH THICK CORRUGATED ALUMINUM JACKET
2. VERIFY REFRIGERATION FLUID OPERATING TEMPERATURE RANGES WITH EQUIPMENT MANUFACTURER.
3. THE ABOVE TABLE APPLIES TO ALL REFRIGERATION PIPING SYSTEMS. INCLUDING COOLING ONLY WITH/WITHOUT HOT GAS BYPASS. HEAT PUMP SYSTEMS INCLUDING MINI-SPLITS AND VRF/VRV HEAT PUMP AND HEAT RECOVERY SYSTEMS.
4. VRF/VRV 3-PIPE HEAT RECOVERY SYSTEMS TYPICALLY HAVE HIGH PRESSURE VAPOR PIPING (FOR HEATING THAT EXCEEDS 201°F
5. VRF 2-PIPE HEAT RECOVERY SYSTEMS TYPICALLY HAVE HIGH PRESSURE VAPOR PIPING (FOR HEATING) THAT IS LESS THAN 201°F.
6. FOR VRF/VRV HEAT RECOVERY SYSTEMS, THE ABOVE TABLE APPLIES TO PIPING BETWEEN THE OUTDOOR UNIT (HP) AND MODE SELECTION BOX (HRB) AND INDOOR UNITS (FAN COIL UNITS).
7. ALL INSULATION WALL THICKNESS GREATER THAN 1-1/2" REQUIRES DOUBLE LAYER (1" PLUS 1-1/2" OR 1-1/2" PLUS 1") TO MEET ASTM E84 (UL 723). EACH INDIVIDUAL LAYER MUST BE FULLY VAPOR PROOF, SEALED AND MEET ASTM E84 25/50 FLAME SPREADING/ SMOKE GENERATED RATINGS.
8. CONDENSATE LINES ABOVE CEILINGS TO BE ASSUMED TO HAVE TEMPERATURE IN THE 40°F-60°F RANGE AND THUS SHALL BE INSULATED PER THE TABLE ABOVE.

REFRIGERANT PIPE MATERIAL SCHEDULE

SERVICE	PIPE MATERIAL	JOINT TYPES	FITTINGS MATERIAL	PRESSURE RATING	VALVE TYPES
REFRIGERATION PIPE SIZES 1/4" TO 3/4" (OD)	NITROGENIZED ACR-ANNEALED COPPER TYPE "K"	BRAZED FLARE	COPPER TYPE "K" BRASS	700 PSI	BALL SOLENOID TXV
REFRIGERATION PIPE SIZES 7/8" TO 1-5/8" (OD)	NITROGENIZED ACR-DRAWN TEMPER COPPER TYPE "K"	BRAZED FLARE	COPPER TYPE "K" BRASS	700 PSI	BALL SOLENOID TXV

MECHANICAL GENERAL NOTES

1. THE TOTAL INSTALLATION SHALL COMPLY WITH ANY REQUIREMENTS OF THE LEGALLY CONSTITUTED AUTHORITIES HAVING JURISDICTION INCLUDING 2022 CBC (CALIFORNIA BUILDING CODE), 2022 CMC/CPC (CALIFORNIA MECHANICAL AND PLUMBING CODE), 2022 CAL GREEN REQUIREMENTS AND THE 2022 TITLE 24 ENERGY CODE.
2. INDICATED DIMENSIONS ARE APPROXIMATE AND ARE GIVEN FOR ESTIMATE PURPOSES ONLY. BEFORE PROCEEDING WITH THE WORK THIS CONTRACTOR SHALL CAREFULLY CHECK AND VERIFY DIMENSIONS, SIZES, REQUIRED CLEARANCES AND SHALL ASSUME FULL RESPONSIBILITY FOR THE FITTING OF EQUIPMENT AND MATERIALS HEREIN REQUIRED TO OTHER PARTS OF THE WORK OF OTHER TRADES. DUCT DIMENSIONS SHOWN ON PLANS ARE NET INSIDE CLEAR.
3. THE DRAWINGS ARE ESSENTIALLY DIAGRAMMATIC TO THE EXTENT THAT OFFSETS, BENDS, SPECIAL FITTINGS AND LOCATIONS ARE NOT EXACTLY LOCATED. DUCTWORK DIMENSIONS SHOWN ON THE DRAWINGS ARE NET INSIDE DIMENSIONS. DO NOT FABRICATE DUCTWORK FROM THESE DRAWINGS. THE MECHANICAL CONTRACTOR IS RESPONSIBLE FOR SUPPLYING SHOP DRAWINGS WHICH REFLECT THE PROPOSED INSTALLATION. THE SHOP DRAWINGS MUST BE APPROVED BY THE ENGINEER PRIOR TO ANY SHEET METAL FABRICATION. THE MECHANICAL CONTRACTOR IS RESPONSIBLE FOR PROVIDING ACCURATE AS-BUILT DRAWINGS AT THE COMPLETION OF THE PROJECT AND SUBMITTING THEM TO THE ENGINEER AND OWNER.
4. CONTRACTOR SHALL COMPLY WITH CONTRACT DOCUMENTS IN LAYING OUT WORK AND EQUIPMENT. COORDINATE THE WORK OF THIS SECTION WITH THE WORK OF OTHER TRADES AND JOB CONDITIONS.
5. THE INSTALLATION OF ACCESS PANELS OR OTHER INDICATING EQUIPMENT OR SPECIALTIES REQUIRING READING, ADJUSTMENT, INSPECTION, REPAIRS, REMOVAL OR REPLACEMENT SHALL BE CONVENIENTLY LOCATED WITH REFERENCE TO THE FINISHED BUILDING.
6. WHERE MATERIAL IS SHOWN ON THE DRAWINGS BUT NOT SPECIFIED, IT SHALL BE OF THE SAME TYPE AND QUALITY AS EXISTING MATERIAL.
7. PROVIDE MANUAL VOLUME DAMPERS AT UPSTREAM PORTION OF TERMINAL AIR BRANCHES. THESE SHALL BE OF THE LOCKING QUADRANT TYPE. WHERE LOCATED OVER SLOPED OR HARD CEILINGS, PROVIDE DURO-DYNE ANGLE GEAR DRIVE OR BOWDEN CABLE CONTROL SYSTEM OR PROVIDE UNITED ENERTECH POWER/BALANCE SYSTEM. REMOTE PLATE LOCATIONS TO BE LOCATED AS DETERMINED BY ARCHITECT.
8. PROVIDE MINIMUM 1" ACOUSTICAL LINING IN DUCTWORK WITHIN 10 FEET OF AIR MOVING EQUIPMENT. PROVIDE DURO-DYNE FLEXIBLE CONNECTION AT DUCT AT EQUIPMENT LOCATIONS.
9. DUCTS IN AN UNCONDITIONED SPACE OR EXTERIOR DUCT WORK SHALL HAVE A MIN. OF R-8 INSULATION. DUCTS WITHIN THE CONDITIONED ENVELOPE ABOVE A CEILING SHALL HAVE A MIN. OF R-4.2 INSULATION. EXTERIOR DUCTWORK SHALL NOT HAVE INSULATION EXPOSED TO THE ENVIRONMENT.
10. WHERE NOT SPECIFICALLY INDICATED OTHERWISE, DUCTWORK AND EQUIPMENT SHALL BE SUPPORTED PER THE SMACNA GUIDELINES FOR SEISMIC RESTRAINT AND CURRENT APPLICABLE CALIFORNIA MECHANICAL CODE.
11. WHEN A FIRE ALARM SYSTEM WITH FULL COVERAGE SMOKE DETECTORS ARE PROVIDED, DUCT SMOKE DETECTORS MAY BE ELIMINATED. FIRE ALARM CONTRACTOR SHALL WIRE SMOKE/FIRE DAMPER ACTIVATORS TO AREA SMOKE DETECTORS.
12. TESTING, ADJUSTING, AND BALANCING (TAB) OF THE AIR CONDITIONING SYSTEMS AND RELATED ANCILLARY EQUIPMENT WILL BE PERFORMED BY A CERTIFIED, INDEPENDENT THIRD PARTY, AABC AGENCY PROCURED BY THE MECHANICAL CONTRACTOR. A COMPLETE AIR BALANCE REPORT TO BE SUBMITTED TO THE ADMINISTRATIVE AUTHORITY AND TO THE MECHANICAL ENGINEER AND APPROVED PRIOR TO FINAL PAYMENT.
13. AIR HANDLING DUCT SYSTEMS SHALL BE CONSTRUCTED, INSTALLED AND INSULATED AS PROVIDED IN CHAPTER 6 OF 2022 CMC.
14. MATERIALS EXPOSED WITHIN DUCTS OR PLENUMS SHALL BE NONCOMBUSTIBLE OR SHALL HAVE FLAME SPREAD INDEX NOT GREATER THAN 25 AND A SMOKE DEVELOPED INDEX NOT GREATER THAN 50 (2022 CMC SECTION 602.2).
15. DUCTWORK SHALL BE HARD DUCT. FLEXIBLE AIR DUCTS SHALL BE NOT MORE THAN 5' IN LENGTH AND SHALL NOT BE USED IN LIEU OF RIDGED ELBOWS OR FITTINGS. FLEXIBLE AIR DUCTS SHALL BE PERMITTED TO BE USED AS AN ELBOW AT A TERMINAL DEVICE (SEC 603.4.1 CMC).
16. ANY SUBSTITUTION MADE THAT IS DIFFERENT FROM WHAT IS SPECIFIED ON THE DRAWINGS SHALL BE CLEARLY INDICATED ON THE SUBMITTAL AS TO THAT WHICH IS BEING SUBSTITUTED.
17. THERMOSTATS SHALL COMPLY WITH THE 2022 ENERGY COMMISSION AND SHALL BE WIFI ENABLED.
18. AT THE TIME OF ROUGH INSTALLATION, OR DURING STORAGE ON THE CONSTRUCTION SITE AND UNTIL FINAL STARTUP OF THE HEATING AND COOLING EQUIPMENT, DUCT AND OTHER RELATED AIR DISTRIBUTION COMPONENT OPENINGS SHALL BE COVERED WITH TAPE, PLASTIC, SHEET METAL OR OTHER METHODS ACCEPTABLE TO THE ENFORCING AGENCY TO REDUCE THE AMOUNT OF DUST OR DEBRIS WHICH MAY COLLECT IN THE SYSTEM.
19. WHERE MORE THAN ONE HEATING, COOLING, VENTILATING, OR REFRIGERATING SYSTEM IS INSTALLED ON THE ROOF OF A BUILDING OR WITHIN A BUILDING, IT SHALL BE PERMANENTLY IDENTIFIED AS TO THE AREA OR SPACE SERVED BY THE EQUIPMENT. (CMC 303.6) PROVIDE PERMANENT LABELING AND IDENTIFICATION FOR HVAC UNIT (SINGLE SYSTEM OR MULTIPLE) AND THERMOSTATS. IDENTIFICATION FOR THE THERMOSTATS SHALL CORRELATE TO THE HVAC UNIT THAT IT SERVES.
20. AIR CONDITIONING REFRIGERATION SERVICE PORTS LOCATED OUTDOORS SHALL BE FITTED WITH LOCKING TYPE TAMPER RESISTANT CAP OR SHALL BE PROTECTED FROM UNAUTHORIZED ACCESS BY A MEANS ACCEPTABLE TO THE BUILDING DEPARTMENT PER CMC SECTION 1105.11.

ANCHORAGE AND BRACING NOTES

1. PIPES, DUCTS AND CONDUITS SHALL BE SUPPORTED AND BRACED PER THE 2024 SMACNA "GUIDELINES FOR SEISMIC RESTRAINTS OF MECHANICAL SYSTEMS AND PLUMBING SYSTEMS", THE "SUPERSTRUT SEISMIC RESTRAINT SYSTEM" FOR PIPES AND CONDUITS ONLY.

APPLICABLE CODES

1. 2022 BUILDING STANDARDS ADMINISTRATIVE CODE, PART 1, TITLE 24 C.C.R.
2. 2022 CALIFORNIA BUILDING CODE (CBC),PART 2, TITLE 24 C.C.R. (IBC WITH AMENDMENTS)
3. 2022 CALIFORNIA ELECTRICAL CODE (CEC), PART 3, TITLE 24 C.C.R. (NEC WITH AMENDMENTS)
4. 2022 CALIFORNIA MECHANICAL CODE (CMC), PART 4, TITLE 24 C.C.R. (UMC WITH AMENDMENTS)
5. 2022 CALIFORNIA PLUMBING CODE (CPC), PART 5, TITLE 24 C.C.R. (UPC WITH AMENDMENTS)
6. 2022 CALIFORNIA FIRE CODE, PART 9, TITLE 24 C.C.R. (IFC WITH AMENDMENTS)
7. 2022 CALIFORNIA REFERENCED STANDARDS, PART 12, TITLE 24 C.C.R.
8. TITLE 19 C.C.R., PUBLIC SAFETY, STATE FIRE MARSHAL REGULATIONS.
9. 2022 CALIFORNIA ENERGY CODE (PART 6, TITLE 24 C.C.R.)
10. 2022 CALIFORNIA GREEN BUILDING STANDARDS CODE (CGBSG), PART 11, TITLE 24 C.C.R.
11. 2021 INTERNATIONAL BUILDING CODE (IBC)
12. 2021 INTERNATIONAL MECHANICAL CODE (IMC)
13. 2021 INTERNATIONAL PLUMBING CODE (IPC)

HVAC LEGEND

SYMBOL	ABBREVIATIONS	DESCRIPTION
		SQ., RECT. OR ROUND DUCT AS NOTED
		DUCT WITH ACOUSTICAL LINER
		EXIST. DUCT OR EQUIP. TO REMAIN
		EXIST. DUCT OR EQUIP. TO BE REMOVED
		FLEXIBLE DUCT
	CD	CEILING DIFFUSER, SUPPLY
	CR / CE	CEILING REGISTER, RETURN & EXHAUST
	SD / SR	SIDE WALL DIFFUSER & SIDE WALL REGISTER
		SECTION THROUGH DUCT
		DUCT DOWN
		SQUARE TO ROUND TRANSITION
		DUCT ACCESS DOOR
		DUCT WITH TURNING VANES
DETAIL No. / SHEET No.		DETAIL REFERENCE
A / M-1		SECTION REFERENCE
EQUIPMENT / ID. No.		EQUIPMENT REFERENCE
	SFD	COMBINATION SMOKE / FIRE DAMPER
	MVD	MANUAL VOLUME DAMPER
	OBD	OPPOSED BLADE DAMPER
		PARALLEL DAMPER
T	T'STAT	THERMOSTAT
CO2	CO2 SENSOR	CO2 SENSOR
T*	T'STAT & CO2 SENSOR	THERMOSTAT & CO2 SENSOR
H		HUMIDISTAT
BD		BACK DRAFT DAMPER
S		SWITCH
TC		TIME CLOCK
DD		DUCT MOUNTED SMOKE DETECTOR
RS		REMOTE SENSOR
	A.F.F.	ABOVE FINISHED FLOOR
	CFM	CUBIC FEET OF AIR PER MINUTE
	CFMS	CFM SUPPLY
	CFMR	CFM RETURN
	CFME	CFM EXHAUST
	O.S.A.	OUTSIDE AIR
	(N)	NEW
	30X10	INDICATES SQUARE DUCT (INCHES)
	10ø	INDICATES ROUND DUCT (INCHES)
	P.O.C	POINT OF CONNECTION
	P.O.D.	POINT OF DEMOLITION
M		MOTORIZED DAMPER
———DX———	REFR.	REFRIGERANT LINES

Sheet List Table

Sheet Number	Sheet Title
M0.1	MECHANICAL LEGENDS & NOTES
M0.2	MECHANICAL SCHEDULES
M1.0	MECHANICAL OVERALL PLAN
M2.1	MECHANICAL FLOOR PLAN - ADMIN BUILDING
M2.2	MECHANICAL ROOF PLAN - ADMIN BUILDING
M3.1A	MECHANICAL FLOOR PLAN - ENLARGED FLOOR PLAN - FIRE STATION
M3.1B	MECHANICAL FLOOR PLAN - ENLARGED FLOOR PLAN - APPARATUS BAY
M3.2	MECHANICAL ROOF PLAN - FIRE STATION
M4.1	MECHANICAL DETAILS
M4.2	MECHANICAL DETAILS CONT.
M4.3	MECHANICAL DETAILS CONT.
M5.1	ENERGY COMPLIANCE DOCUMENTS
M5.2	ENERGY COMPLIANCE DOCUMENTS
M5.3	ENERGY COMPLIANCE DOCUMENTS
M5.4	ENERGY COMPLIANCE DOCUMENTS
M5.5	ENERGY COMPLIANCE DOCUMENTS
M5.6	ENERGY COMPLIANCE DOCUMENTS
M5.7	ENERGY COMPLIANCE DOCUMENTS
M5.8	ENERGY COMPLIANCE DOCUMENTS
M5.9	ENERGY COMPLIANCE DOCUMENTS
M5.10	ENERGY COMPLIANCE DOCUMENTS
M5.11	ENERGY COMPLIANCE DOCUMENTS
M5.12	ENERGY COMPLIANCE DOCUMENTS NRCC CX

STK ARCHITECTURE, INC.
42095 ZEVO DR., TEMECULA, CALIFORNIA 92590-3780
Phone: 951.296.9110 Fax: 951.296.6079 Email: stk@stkinc.com

CONSULTANT:
412 E. Vanderbilt Way
San Bernardino, CA 92408
Phone: 909.890.3700
Fax: 909.890.3770
Email: cadd@designwesteng.com
DESIGN WEST ENGINEERING
MECHANICAL • ELECTRICAL • ENERGY CONSULTANTS

REVIEWED FOR CODE COMPLIANCE

THESE PLANS AND DOCUMENTS HAVE BEEN REVIEWED AND FOUND TO BE IN COMPLIANCE WITH THE APPLICABLE CODE REQUIREMENTS OF THE JURISDICTION. ISSUANCE OF A PERMIT IS RECOMMENDED, SUBJECT TO APPROVAL BY OTHER DEPARTMENTS AND ANY NOTED CONDITIONS. THE STAMPING OF THESE PLANS SHALL NOT BE HELD TO PERMIT OR BE AN APPROVAL OF ANY VIOLATION OF APPLICABLE CODES AND STANDARDS, NOR RELIEVE THE OWNER, DESIGN PROFESSIONAL OF RECORD, OR CONTRACTOR OF COMPLIANCE WITH THE APPLICABLE CODES AND STANDARDS. PLAN REVIEW OF DOCUMENTS DOES NOT AUTHORIZE CONSTRUCTION TO PROCEED IN VIOLATION OF ANY FEDERAL, STATE, OR LOCAL REGULATION.

BUILDING BUREAU SOLUTIONS, INC.
REVIEWED BY: STEVE KIM, PE, CASp

THIS SET OF THE PLANS AND SPECIFICATIONS MUST BE KEPT ON THE JOB SITE AT ALL TIMES AND IT IS UNLAWFUL TO MAKE ANY CHANGES OR ALTERATIONS WITHOUT PERMISSION FROM THE CITY. OCCUPANCY OF STRUCTURE(S) IS NOT PERMITTED UNTIL FINAL APPROVAL IS GRANTED BY ALL APPLICABLE DEPARTMENTS.

BUILDING BUREAU SOLUTIONS INC.

REGISTERED PROFESSIONAL ENGINEER
STEVEN M. JOHNSON
No. 33209
SIGNED:04/15/2026
MECHANICAL
STATE OF CALIFORNIA

PROJECT ADMINISTERED BY:
CITY OF PERRIS

101 NORTH "D" STREET
PERRIS, CA 92570

PROJECT NAME:
SOUTH FIRE STATION AND ADMINISTRATIVE BUILDING

PROJECT CIP: F077

2495 MURRIETA ROAD
PERRIS, CA 92585

ISSUE INFORMATION:

DATE:	INFORMATION:
11-26-25	95% CD SUBMITTAL
02-05-26	1 1st PC RESPONSE
02-19-26	2 2nd PC RESPONSE

SHEET INFORMATION:
STK PROJECT NO.: 365-03-25
SCALE: AS NOTED
DATE: NOVEMBER 2025
PLOT DATE: —
DRAWN BY: JG / JW

SEAL:

SHEET TITLE:
MECHANICAL LEGENDS & NOTES

SHEET NO.:
M0.1

EXHAUST FAN SCHEDULE

TAG	MFR. & MODEL NO.	AREA SERVED	FAN SYSTEM CFM	ESP	RPM	SONES	ELECTRICAL V-PH-HZ	AMPS	OPR.WT WITH ACCESSORIES (LBS)	ANCHORAGE DETAIL REFERENCE	REMARKS (SEE EQUIPMENT NOTES BELOW)	EXHAUST FAN INTERLOCKED
EF 1	PANASONIC FV-0510VSC1	BATH 1	100	0.25	1197	1.3	120-1-60	0.39	10	6/M4.1	3 4	
EF 2	PANASONIC FV-0510VSC1	BATH 2	100	0.25	1197	1.3	120-1-60	0.39	10	6/M4.1	3 4	
EF 3	PANASONIC FV-0510VSC1	BATH 3	100	0.25	1197	1.3	120-1-60	0.39	10	6/M4.1	3 4	
EF 4	PANASONIC FV-0510VSC1	BATH 4	100	0.25	1197	1.3	120-1-60	0.39	10	6/M4.1	3 4	
EF 5	PANASONIC FV-0510VSC1	BATH 5	100	0.25	1197	1.3	120-1-60	0.39	10	6/M4.1	3 4	
EF 6	PANASONIC FV-0510VSC1	ADA R.R.	100	0.25	1197	1.3	120-1-60	0.39	10	6/M4.1	3 4	
EF 7	PANASONIC FV-0510VSC1	R.R.	100	0.25	1197	1.3	120-1-60	0.39	10	6/M4.1	3 4	
EF 8	COOK GN-542	COMM	350	.25	1600	5.5	120-1-60	1.2	30	6/M4.1	1 2 5 8 9	
EF 9	PLYMOVENT TEV-585-60	VEHICLE EXHAUST	3250	6.0	3450	69	480-3-60	30	190	14/M4.1	6 7 8	
EF 10	PANASONIC FV-0510VSC1	ICE	50	0.25	1050	0.5	120-1-60	0.39	10	6/M4.1	3 5	
EF 11	PANASONIC FV-0510VSC1	JANITOR	50	0.25	1050	0.5	120-1-60	0.39	10	6/M4.1	3 4	
EF 12	PANASONIC FV-0510VSC1	BC'S BATH	100	0.25	1197	1.3	120-1-60	0.39	10	6/M4.1	3 4	
EF 13	PANASONIC FV-30VQ3	DECON	250	0.25	990	-	120-1-60	0.52	19	6/M4.1	3 4	
EF 14	COOK 135SQN10D	ELEC	1000	0.35	1050	6.3	120-1-60	1/6 HP	70	6/M4.1	1 2 5 8 9	
EF 1A	PANASONIC FV-0510VSC1	ADMIN JANITOR	100	0.25	1197	1.3	120-1-60	0.39	10	6/M4.1	3 4	
EF 2A	PANASONIC FV-0510VSC1	ADMIN MEN'S RR	100	0.25	1197	1.3	120-1-60	0.39	10	6/M4.1	3 4	FC 4A
EF 3A	PANASONIC FV-0510VSC1	ADMIN WOMEN'S RR	100	0.25	1197	1.3	120-1-60	0.39	10	6/M4.1	3 4	FC 5A
EF 4A	PANASONIC FV-0510VSC1	ADMIN LOBBY RR	100	0.25	1197	1.3	120-1-60	0.39	10	6/M4.1	3 4	FC 5A
EF 5A	COOK 120SQN10D	ADMIN ELEC	600	0.35	1050	4.9	120-1-60	1/6 HP	70	6/M4.1	1 2 5 8 9	
EF 6A	COOK GN-542	ADMIN COMM	350	.25	1600	5.5	120-1-60	1.2	30	6/M4.1	1 2 5 8 9	

EQUIPMENT NOTES:

1. PROVIDE W/ SPRING TYPE VIBRATION ISOLATION HARDWARE, SILENCER, FLEXIBLE CONNECTIONS, MOTOR GUARD AND BACKDRAFT RAIN CAP.
2. PROVIDE W/ BACKDRAFT DAMPER.
3. INTEGRAL BACKDRAFT DAMPER, PROVIDE W/ CEILING GRILLE, AND MOISTURE SENSOR.
4. TO BE CONTROLLED BY AND INTERLOCKED W/ WALL SWITCH.
5. INTERLOCK W/ THERMOSTAT SET AT 85°F.
6. PROVIDE W/ CONTROL PANEL (PLMOVENT ?). FAN IS RADIAL, CAST ALMAG WHEEL, CAST ALUMINUM HOUSING W/ FLEXIBLE CONNECTIONS AND VAN SILENCER. ENTIRE FAN ASSEMBLY SHALL BE INSTALLED INDOORS.
7. INSTALL PER MANUFACTURER INSTRUCTION W/ VIBRATION ISOLATERS/DAMPERS, MOUNTING BRACKET, AND SOFT CONNECTIONS INCLUDED
8. MECHANICAL CONTRACTOR SHALL PROVIDE FUSED DISCONNECT AND MOTOR STARTER (COORDINATE W/ EXHAUST REMOVAL SYSTEM SUPPLIER)
9. PROVIDE THERMAL OVERLOAD PROTECTION ON FAN MOTOR.

FAN COIL SCHEDULE

TAG	MANUFACTURER & MODEL NO.	AREA SERVED	COOLING CONDITION EAT DB/WB (°F)	COOLING LAT DB (°F)	HEATING CONDITION EAT (°F)	HEATING LAT DB/WB (°F)	CFM	E.S.P.	AIRFLOW VOLUME	REFRIG. TYPE	ELECTRICAL MCA	MOCP	V-PH-HZ	MIN OSA	OPER. WT. (LBS)	ANCHORAGE DETAIL REFERENCE	SMOKE DUCT DETECTOR	REMARKS (SEE EQUIPMENT NOTES BELOW)
FC 1	SAMSUNG AR09DXDABWKNCV	SLEEP QTR. 1	75.9/62.8	54.7	61	97.2	357	-	HIGH	R-32	SEE CONDENSING UNIT - CU 1			20	23.1	11/M4.1	NO	1 3 4
FC 2	SAMSUNG AR09DXDABWKNCV	SLEEP QTR. 2	75.9/62.8	54.7	61	97.2	357	-	HIGH	R-32	SEE CONDENSING UNIT - CU 2			20	23.1	11/M4.1	NO	1 3 4
FC 3	SAMSUNG AR09DXDABWKNCV	SLEEP QTR. 3	75.9/62.8	54.7	61	97.2	357	-	HIGH	R-32	SEE CONDENSING UNIT - CU 3			20	23.1	11/M4.1	NO	1 3 4
FC 4	SAMSUNG AR09DXDABWKNCV	SLEEP QTR. 4	75.9/62.8	54.7	61	97.2	357	-	HIGH	R-32	SEE CONDENSING UNIT - CU 4			20	23.1	11/M4.1	NO	1 3 4
FC 5	SAMSUNG AR09DXDABWKNCV	SLEEP QTR. 5	75.9/62.8	54.7	61	97.2	357	-	HIGH	R-32	SEE CONDENSING UNIT - CU 5			20	23.1	11/M4.1	NO	1 3 4
FC 6	SAMSUNG AR09DXDABWKNCV	SLEEP QTR. 6	75.9/62.8	54.7	61	97.2	357	-	HIGH	R-32	SEE CONDENSING UNIT - CU 6			20	23.1	11/M4.1	NO	1 3 4
FC 7	SAMSUNG AR09DXDABWKNCV	SLEEP QTR. 7	75.9/62.8	54.7	61	97.2	357	-	HIGH	R-32	SEE CONDENSING UNIT - CU 7			20	23.1	11/M4.1	NO	1 3 4
FC 8	SAMSUNG AR09DXDABWKNCV	SLEEP QTR. 8	75.9/62.8	54.7	61	97.2	357	-	HIGH	R-32	SEE CONDENSING UNIT - CU 8			20	23.1	11/M4.1	NO	1 3 4
FC 9	SAMSUNG AR09DXDABWKNCV	SLEEP QTR. 9	75.9/62.8	54.7	61	97.2	357	-	HIGH	R-32	SEE CONDENSING UNIT - CU 9			20	23.1	11/M4.1	NO	1 3 4
FC 10	SAMSUNG AR09DXDABWKNCV	BC QTR.	75.9/62.8	54.7	61	97.2	357	-	HIGH	R-32	SEE CONDENSING UNIT - CU 10			20	23.1	11/M4.1	NO	1 3 4
FC 11	SAMSUNG AM048FEZDCG/AA	OFFICE / LOBBY	80.2/66.9	56.4	61	99.3	1400	1.0	HIGH	R-32	7.5	15	208V-1Ø-60Hz	300	168	11/M4.1	NO	2 5
FC 12	SAMSUNG AM048FEZDCG/AA	KITCHEN	80.2/66.9	58.5	61	99.6	1400	1.0	HIGH	R-32	7.5	15	208V-1Ø-60Hz	350	168	11/M4.1	NO	2 5
FC 13	SAMSUNG AM048FEZDCG/AA	EXERCISE / RESTROOMS	82.4/64.8	58.5	61	92.3	1400	1.0	HIGH	R-32	7.5	15	208V-1Ø-60Hz	670	168	11/M4.1	NO	2 5
FC 1A	SAMSUNG AM048FEZDCG/AA	ADMIN OPEN OFFICE	77.3/63.3	59.2	61	92.3	1400	1.0	HIGH	R-32	7.5	15	208V-1Ø-60Hz	200	168	11/M4.1	NO	2 5
FC 2A	SAMSUNG AM036FEZDCG/AA	ADMIN TRAINING	78.6/63.7	60.7	61	90.5	1050	1.0	HIGH	R-32	5.13	15	208V-1Ø-60Hz	320	124	11/M4.1	YES	2 5
FC 3A	SAMSUNG AM048FEZDCG/AA	ADMIN TRAINING	78.5/63.7	60.3	61	96.3	1400	1.0	HIGH	R-32	7.5	15	208V-1Ø-60Hz	440	168	11/M4.1	YES	2 5
FC 4A	SAMSUNG AM048FEZDCG/AA	ADMIN OFF/KITCH	80.4/64.8	58.6	61	92.3	1400	1.0	HIGH	R-32	7.5	15	208V-1Ø-60Hz	580	168	11/M4.1	NO	2 5
FC 5A	SAMSUNG AM048FEZDCG/AA	ADMIN OFF/LOBBY	79.5/64.1	58.5	61	96.3	1400	1.0	HIGH	R-32	7.5	15	208V-1Ø-60Hz	460	168	11/M4.1	NO	2 5

EQUIPMENT NOTES:

1. HIGH WALL STYLE FAN COIL
2. VERTICAL DUCTED MODEL
3. POWER TO FAN COIL IS FEED FROM CONDENSING UNIT
4. PROVIDE CONDENSATE PUMP
5. PROVIDE WITH SAMSUNG REMOTE THERMOSTAT

CONDENSING UNIT (HEAT PUMP) SCHEDULE

TAG	MANUFACTURER & MODEL NO.	DESIGN COOLING CONDITION AMBIENT DB/WB °F	TOTAL (BTU/h)	SENSIBLE (BTU/h)	EFF.	HEATING CAPACITY AMBIENT TEMP °F	OUTPUT (MBH)	EFF.	ELECTRICAL MCA	MOCP	V-PH-HZ	OPER. WT. (LBS)	ANCHORAGE DETAIL REFERENCE	REMARKS (SEE EQUIPMENT NOTES BELOW)
CU 1	SAMSUNG AR09DXDABWKXCV	105/69	10,198	8,163	25 SEER2 16.35 EER2	30	16,023	16.4 5°F COP 10.50 HSPF2	12	20	208V-1Ø-60Hz	69.2	11/M-4.1	1 2
CU 2	SAMSUNG AR09DXDABWKXCV	105/69	10,198	8,163	25 SEER2 16.35 EER2	30	16,023	16.4 5°F COP 10.50 HSPF2	12	20	208V-1Ø-60Hz	69.2	11/M-4.1	1 2
CU 3	SAMSUNG AR09DXDABWKXCV	105/69	10,198	8,163	25 SEER2 16.35 EER2	30	16,023	16.4 5°F COP 10.50 HSPF2	12	20	208V-1Ø-60Hz	69.2	11/M-4.1	1 2
CU 4	SAMSUNG AR09DXDABWKXCV	105/69	10,198	8,163	25 SEER2 16.35 EER2	30	16,023	16.4 5°F COP 10.50 HSPF2	12	20	208V-1Ø-60Hz	69.2	11/M-4.1	1 2
CU 5	SAMSUNG AR09DXDABWKXCV	105/69	10,198	8,163	25 SEER2 16.35 EER2	30	16,023	16.4 5°F COP 10.50 HSPF2	12	20	208V-1Ø-60Hz	69.2	11/M-4.1	1 2
CU 6	SAMSUNG AR09DXDABWKXCV	105/69	10,198	8,163	25 SEER2 16.35 EER2	30	16,023	16.4 5°F COP 10.50 HSPF2	12	20	208V-1Ø-60Hz	69.2	11/M-4.1	1 2
CU 7	SAMSUNG AR09DXDABWKXCV	105/69	10,198	8,163	25 SEER2 16.35 EER2	30	16,023	16.4 5°F COP 10.50 HSPF2	12	20	208V-1Ø-60Hz	69.2	11/M-4.1	1 2
CU 8	SAMSUNG AR09DXDABWKXCV	105/69	10,198	8,163	25 SEER2 16.35 EER2	30	16,023	16.4 5°F COP 10.50 HSPF2	12	20	208V-1Ø-60Hz	69.2	11/M-4.1	1 2
CU 9	SAMSUNG AR09DXDABWKXCV	105/69	10,198	8,163	25 SEER2 16.35 EER2	30	16,023	16.4 5°F COP 10.50 HSPF2	12	20	208V-1Ø-60Hz	69.2	11/M-4.1	1 2
CU 10	SAMSUNG AR09DXDABWKXCV	105/69	10,198	8,163	25 SEER2 16.35 EER2	30	16,023	16.4 5°F COP 10.50 HSPF2	12	20	208V-1Ø-60Hz	69.2	11/M-4.1	1 2
CU 11	SAMSUNG AM048FCMDCG/AA	105/69	40,527	29,306	19 SEER2 11.7 EER2	30	54,900	10 HSPF2	MCA 24	MOCP 30	208V-1Ø-60Hz	243.6	11/M-4.1	1
CU 12	SAMSUNG AM048FCMDCG/AA	105/69	42,873	31,398	19 SEER2 11.7 EER2	30	53,802	10 HSPF2	24	30	208V-1Ø-60Hz	243.6	11/M-4.1	1
CU 13	SAMSUNG AM048FCMDCG/AA	105/69	44,193	36,362	19 SEER2 11.7 EER2	30	55,700	10 HSPF2	24	30	208V-1Ø-60Hz	243.6	11/M-4.1	1
CU 1A	SAMSUNG AM036FCMDCG/AA	105/69	38,130	27,494	19 SEER2 12 EER2	30	55,700	10 HSPF2	22	30	208V-1Ø-60Hz	243.6	11/M-4.1	1
CU 2A	SAMSUNG AM036FCMDCG/AA	105/69	32,027	23,281	19 SEER2 12 EER2	30	41,300	10 HSPF2	22	30	208V-1Ø-60Hz	243.6	11/M-4.1	1
CU 3A	SAMSUNG AM036FCMDCG/AA	105/69	38,398	27,695	19 SEER2 12 EER2	30	55,700	10 HSPF2	22	30	208V-1Ø-60Hz	243.6	11/M-4.1	1
CU 4A	SAMSUNG AM048FCMDCG/AA	105/69	44,193	33,106	19 SEER2 11.7 EER2	30	55,700	10 HSPF2	24	30	208V-1Ø-60Hz	243.6	11/M-4.1	1
CU 5A	SAMSUNG AM048FCMDCG/AA	105/69	43,412	32,021	19 SEER2 11.7 EER2	30	55,700	10 HSPF2	24	30	208V-1Ø-60Hz	243.6	11/M-4.1	1

EQUIPMENT NOTES:

1. MOUNT CONDENSING UNIT ON A LEVEL PAD ON GROUND LEVEL. REFER TO STRUCTURAL DRAWINGS FOR CONDENSING UNIT PAD.
2. CONDENSING UNIT TO FEED POWER TO FAN COIL

SUPPLY FAN SCHEDULE

TAG	MFR. & MODEL NO.	AREA SERVED	FAN SYSTEM CFM	ESP	RPM	SONES	ELECTRICAL V-PH-HZ	HP	OPR.WT WITH ACCESSORIES (LBS)	ANCHORAGE DETAIL REFERENCE	REMARKS (SEE EQUIPMENT NOTES BELOW)
SF 1	COOK 120SQN10D	TURN OUT GEAR	600	0.36	1050	4.9	120-1-60	1/6	70	6/M4.1	1 2 3 4 5

EQUIPMENT NOTES:

1. PROVIDE W/ BACKDRAFT DAMPER
2. PROVIDE ALL MOUNTING HARDWARE INCLUDING VIBRATION ISOLATION AND SEISMIC BRACING.
3. INTERLOCK W/ WALL SWITCH.
4. INLINE FAN
5. PROVIDE ALL CONTROL WIRING IN CONDUIT AND ALL ACCESSORIES REQUIRED BY MANUFACTURER FOR A COMPLETE AND OPERATIONAL SYSTEM.
5. PROVIDE W/ FILTER BOX

HIGH-VOLUME LOW SPEED FAN SCHEDULE

TAG	MFR. & MODEL NO.	AREA SERVED	ELECTRICAL MAX RPM	HP	V-PH-HZ	AMPS	OPR.WT WITH ACCESSORIES (LBS)	ANCHORAGE DETAIL REFERENCE	REMARKS (SEE EQUIPMENT NOTES BELOW)
F 1	MACRO AIR	APP BAY	129	1	208-3-60	2.88	189	REFER TO STRUCTURAL DRAWINGS	1
F 2	MACRO AIR	APP BAY	129	1	208-3-60	2.88	189	REFER TO STRUCTURAL DRAWINGS	1

EQUIPMENT NOTES:

1. WITH VARIABLE FREQUENCY DRIVE
2. ALL BLACK FINISH
3. WITH DIGITAL NETWORK CONTROLLER - CONTROLLER 4 #30-04007-00
4. PROVIDE FAN EXTENDERS AS REQUIRED. REFER TO ARCHITECTURAL PLANS FOR MOUNTING HEIGHT
5. GLULAM HARDWARE KIT (FOR UNIVERSAL MOUNT)

HIGH VELOCITY FAN NOTES:

THE INSTALLATION OF HIGH VOLUME LOW SPEED (HVLS) FANS SHALL COMPLY WITH NFPA 13, SECTION 11.1.7 BUILDINGS EQUIPPED WITH AN AUTOMATIC FIRE SPRINKLER SYSTEM SHALL COMPLY WITH THE FOLLOWING.

1. THE MAXIMUM FAN DIAMETER SHALL BE 24 FEET
2. THE HVLS FAN SHALL BE CENTERED APPROXIMATELY BETWEEN FOUR ADJACENT SPRINKLERS.
3. THE VERTICAL CLEARANCE FROM THE HVLS FAN TO SPRINKLER DEFECTOR SHALL BE A MINIMUM OF 3 FEET.
4. ALL HVLS FANS SHALL BE INTERLOCKED TO SHUT DOWN IMMEDIATELY UPON RECEIVING A WATERFLOW SIGNAL FROM THE ALARM SYSTEM IN ACCORDANCE WITH THE REQUIREMENTS OF NFPA 72.

ENERGY RECOVERY VENTILATOR SCHEDULE

TAG	MANUFACTURER & MODEL NO.	AREA SERVED	SUPPLY FAN AIRFLOW (CFM)	ESP (IN WG)	MOTOR HP	RPM	EXHAUST FAN AIRFLOW (CFM)	ESP (IN WG)	MOTOR HP	RPM
ERV 1	ALDES E1800L-Fi-EC	FIRE STATION	1600	.35	1.34	1705	1000	.35	1.34	1305
ERV 2	ALDES PE20	ADMIN BUILDING	2000	.35	2.55	2715	1600	.35	2.55	2256

TAG	ERV PERFORMANCE SUPPLY SUMMER (DB) EAT (°F)	SUPPLY SUMMER LAT (°F)	SUPPLY WINTER (DB) EAT (°F)	SUPPLY WINTER LAT (°F)	EXHAUST SUMMER (DB) EAT (°F)	EXHAUST SUMMER LAT (°F)	EXHAUST WINTER (DB) EAT (°F)	EXHAUST WINTER LAT (°F)	WINTER SENSIBLE ENERGY EFF.	SUMMER SENSIBLE ENERGY EFF.
ERV 1	105	91.5	30	45.7	75	96.4	65	40.1	71.9	71.9
ERV 2	105	88.9	30	48.8	75	95	65	41.8	67.1	67.1

TAG	ELECTRICAL DATA FLA	MCA	MOP	V-PH-HZ	PHYSICAL DATA LxWxH (IN)	WEIGHT (LBS)	REMARKS (SEE EQUIPMENT NOTES BELOW)
ERV 1	9.1	-	-	208V-1Ø-60Hz	49x46x30	258	1
ERV 2	9.8	11	15	208V-3Ø-60Hz	100x46x45	826	1

1. PROVIDE UNIT WITH FACTORY INSTALLED CONDENSATE PUMP.

DRYER FAN SCHEDULE

TAG	MFR. & MODEL NO.	AREA SERVED	FAN PERFORMANCE CFM	ESP.	ELECTRICAL WATTS	W-PH-HZ	OPR.WT WITH ACCESSORIES (LBS)	ANCHORAGE DETAIL REFERENCE	REMARKS (SEE EQUIPMENT NOTES BELOW)
DF 1	FANTECH DBF110	LAUNDRY FIRE STATION	72	1.22"	66	120V -1ø-60	189	REFER TO STRUCTURAL DRAWINGS	1

EQUIPMENT NOTES:

1. W/ LINT TRAP BOX

STK ARCHITECTURE, INC.
42095 ZEVO DR., TEMECULA, CALIFORNIA 92590-3780
Phone: 951.296.9110 Fax: 951.296.6079 Email: stk@stkinc.com

CONSULTANT:

REVIEWED FOR CODE COMPLIANCE

BUILDING BUREAU SOLUTIONS INC.

DESIGN WEST ENGINEERING
MECHANICAL • ELECTRICAL • ENERGY CONSULTANTS
Email: code@designwesteng.com

REGISTERED PROFESSIONAL ENGINEER STEVEN M. JOHNSON No. 33209 SIGNED:04/15/2026 MECHANICAL STATE OF CALIFORNIA

PROJECT ADMINISTERED BY:

CITY OF PERRIS

101 NORTH "D" STREET
PERRIS, CA 92570

PROJECT NAME:

SOUTH FIRE STATION AND ADMINISTRATIVE BUILDING

PROJECT CIP: F077

2495 MURRIETA ROAD
PERRIS, CA 92585

ISSUE INFORMATION:

DATE:	INFORMATION:
11-26-25	95% CD SUBMITTAL
02-05-26	△1 1st PC RESPONSE
02-19-26	△2 2nd PC RESPONSE

SHEET INFORMATION:

STK PROJECT NO.: 365-03-25
SCALE: AS NOTED
DATE: NOVEMBER 2025
PLOT DATE: –
DRAWN BY: JG / JW

SEAL:

SHEET TITLE:

MECHANICAL SCHEDULES

SHEET NO.:

M0.2

04/14/2026 6:47PM R:_PROJECT\2025\25-114 Perris Fire Station_CAD\25-114 M-Front.dwg

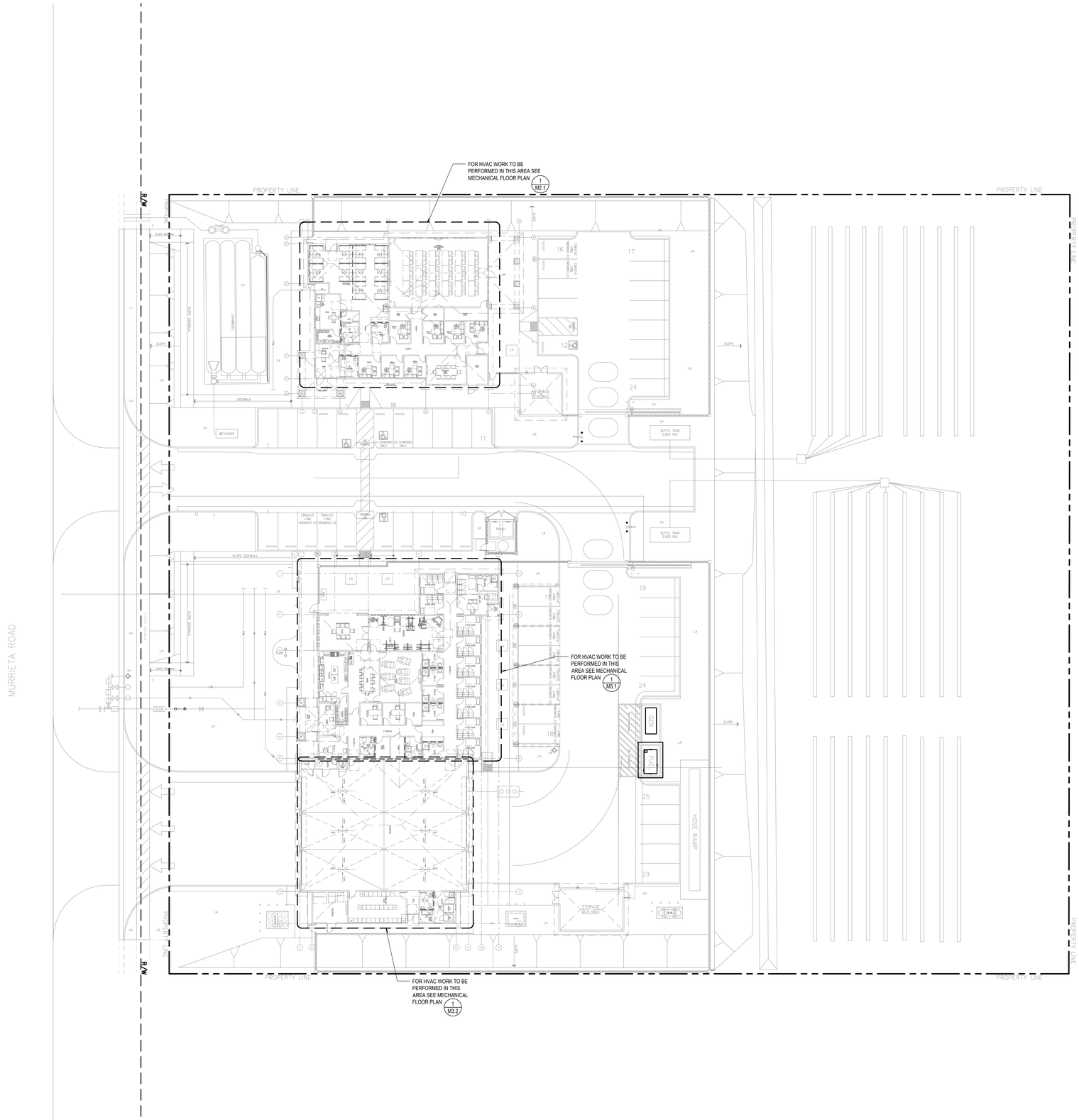

STK ARCHITECTURE, INC.
42095 ZEVO DR., TEMECULA, CALIFORNIA 92590-3780
Phone: 951.296.9110 Fax: 951.296.6079 Email: stk@stknc.com

CONSULTANT:

REVIEWED FOR CODE COMPLIANCE

DESIGN WEST ENGINEERING
MECHANICAL • ELECTRICAL • ENERGY CONSULTANTS
BUILDING BUREAU SOLUTIONS INC.

REGISTERED PROFESSIONAL ENGINEER
No. 33209
SIGNED 04/15/2026
MECHANICAL
STATE OF CALIFORNIA

PROJECT ADMINISTERED BY:

CITY OF PERRIS

101 NORTH "D" STREET
PERRIS, CA 92570

PROJECT NAME:

SOUTH FIRE STATION AND ADMINISTRATIVE BUILDING

PROJECT CIP: F077

2495 MURRIETA ROAD
PERRIS, CA 92585

ISSUE INFORMATION:

DATE:	INFORMATION:
11-26-25	95% CD SUBMITTAL
02-05-26	1st PC RESPONSE
02-19-26	2nd PC RESPONSE

SHEET INFORMATION:

STK PROJECT NO.: 365-03-25
SCALE: AS NOTED
DATE: NOVEMBER 2025
PLOT DATE: –
DRAWN BY: JG / JW

SEAL:

SHEET TITLE:

MECHANICAL OVERALL PLAN

SHEET NO.:

M1.0

MECHANICAL SITE PLAN | SCALE: 1"=20'-0" | 1

25-114

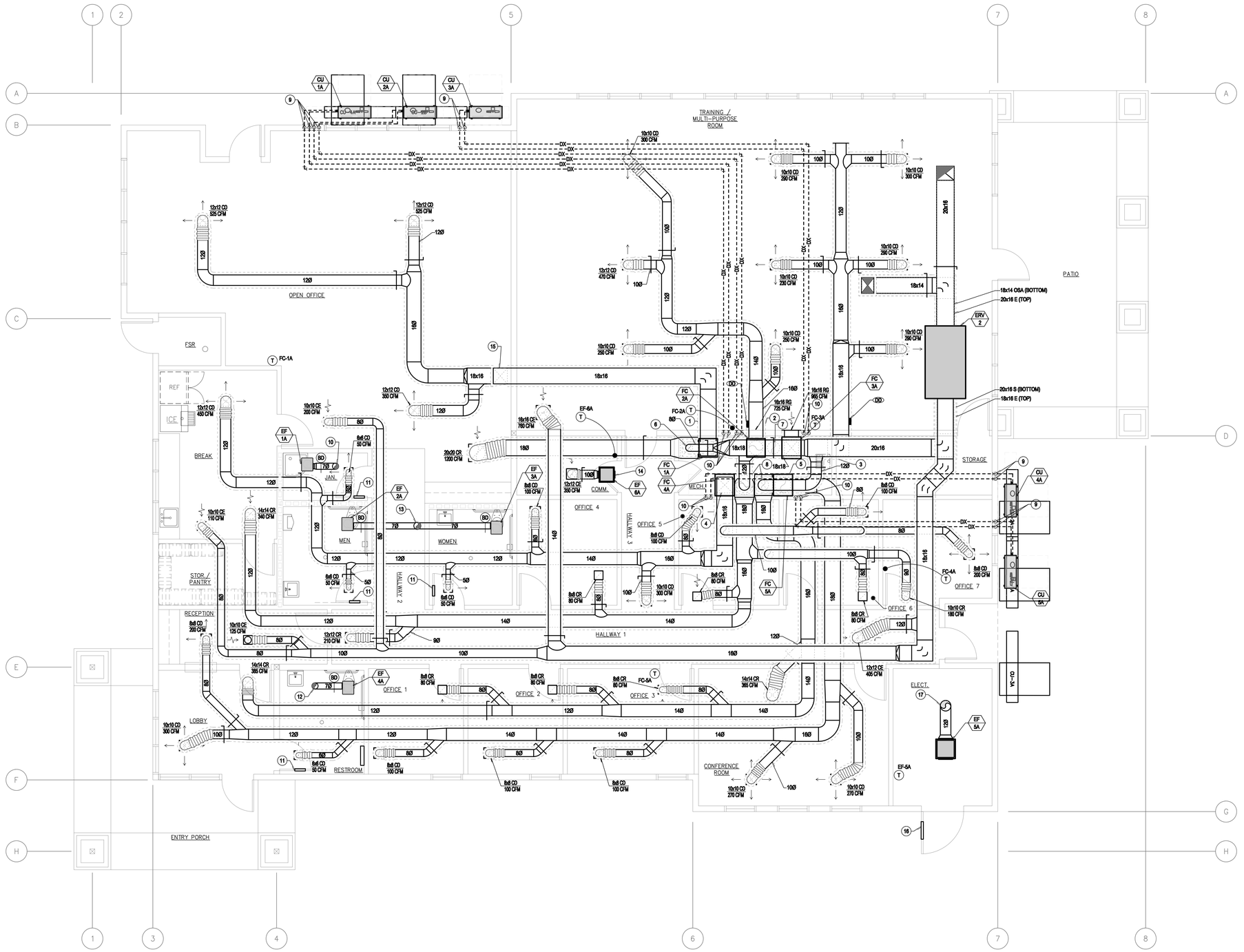

GENERAL NOTES

1. FOR LINE TYPES, SYMBOLS & ABBREVIATIONS SEE LEGEND ON SHEET M0.1.
2. ALL SPIN-IN OR TAP TYPE DUCT CONNECTIONS SHALL BE PROVIDED WITH AN EXTRACTOR.
3. T-STATS SHALL NOT BE MOUNTED IN DIRECT LINE OF ANY SUPPLY DIFFUSER OR NEAR ANY HEAT REJECTION EQUIPMENT.
4. DUCT DIMENSIONS ARE INSIDE CLEAR, ADD AN ADDITIONAL 3" MINIMUM FOR R-8 DUCT INSULATION. SIZES MAY CHANGE PER MANUFACTURER
5. ALL DUCTWORK SHALL BE HARD DUCT. FLEX DUCT MAY BE USED ONLY AT SUPPLY & RETURN OUTLETS AT A MAX. LENGTH OF 5'-0".
6. ENVIRONMENT AIR DUCT EXHAUST SHALL TERMINATE NOT LESS THAN 3 FEET (914 MM) FROM A PROPERTY LINE, 10 FEET (3048 MM) FROM A FORCED AIR INLET, AND 3 FEET (914 MM) FROM OPENINGS INTO THE BUILDING. ENVIRONMENTAL EXHAUST DUCTS SHALL NOT DISCHARGE ONTO A PUBLIC WALKWAY. (502 CMC).
7. ALL DUCTWORK SHALL BE MOUNTED HIGH AND TIGHT TO ROOF STRUCTURE AS POSSIBLE.
8. ALL THERMOSTATS SHALL BE PROGRAMMED TO RUN IN FAN MODE DURING OCCUPIED HOURS AND SHALL COORDINATE HOURS WITH OWNER. COOLING/ HEATING MODE SHALL RUN AS NEED, PER TEMPERATURE SET POINT AND OCCUPANT LOAD.
9. ALL RESTROOM DOORS SHALL HAVE A 1" UNDERCUT.
10. AT ALL HARD LID CEILINGS, CONTRACTOR SHALL PROVIDE FOR "MAT" CABLE DRIVEN DAMPERS. MODEL RT-150. CABLE SHALL BE ROUTED BEHIND GRILLE OPENING AND INSTALLED PER MANUFACTURER'S REQUIREMENTS.
11. ALL HVAC UNITS OR SYSTEMS SERVING A COMMON AIR SPACE WITH A COMBINED AIRFLOW EXCEEDING 2,000 CFM MUST BE INTERCONNECTED TO SHUT DOWN IMMEDIATELY UPON ALARM CONDITION FROM DUCT DETECTORS WITHOUT INTERFERENCE FROM EMS OR ANY OTHER SYSTEMS. ALL CONTROL RELAYS USED FOR SHUT DOWN MUST BE CALIFORNIA STATE FIRE MARSHAL LISTED FOR RELEASING SERVICE.

CONSTRUCTION NOTES

1. 18"x16" SUPPLY DUCT DN TO FC-1A
2. 16"ø SUPPLY DUCT DN TO FC-2A
3. 18"x16" SUPPLY DUCT DN TO FC-3A
4. 18"x16" SUPPLY DUCT DN TO FC-4A
5. 18"ø SUPPLY DUCT DN TO FC-5A
6. 8"ø OSA DUCT DN TO RETURN PLENUM, MVD TO BE SET AT MIN OSA TO 200 CFM
7. 14"ø OSA DUCT DN TO RETURN PLENUM, MVD TO BE SET AT MIN OSA TO 320 CFM FOR FC-2A, SET MIN OSA TO 440 CFM FOR FC-3A
8. 12"ø OSA DUCT DN TO RETURN PLENUM, MVD TO BE SET AT MIN OSA TO 580 CFM FOR FC-4A, SET MIN OSA TO 460 CFM FOR FC-5A
9. DX PIPING DN IN WALL TO CONDENSING UNIT
10. DX PIPING DN IN WALL TO FAN COIL
11. 6"x24" LOUVER LOW ON DOOR WITH 50% FREE AREA. FOR MOUNTING SEE ARCHITECTURAL DRAWINGS
12. 7"ø EXHAUST DUCT UP TO APPROVED ROOF CAP WITH WEATHER HOOD AND CORROSION RESISTANT SCREEN HAVING NOT LESS THAN 1/4 OF AN INCH AND NOT MORE THAN 1/2 OF AN INCH OPENINGS TO PROTECT THE EXHAUST DUCT IN ACCORDANCE WITH CMC 502.1
13. 8"ø EXHAUST DUCT UP TO APPROVED ROOF CAP WITH WEATHER HOOD AND CORROSION RESISTANT SCREEN HAVING NOT LESS THAN 1/4 OF AN INCH AND NOT MORE THAN 1/2 OF AN INCH OPENINGS TO PROTECT THE EXHAUST DUCT IN ACCORDANCE WITH CMC 502.1
14. EXHAUST FAN TO DISCHARGE INTO CEILING AREA
15. 18"x16" SUPPLY DUCT DN TO LOW CEILING SPACE
16. 24"x5'-6" LOUVER LOW ON DOOR WITH 50% FREE AREA. FOR MOUNTING SEE ARCHITECTURAL DRAWINGS
17. 12"ø EXHAUST DUCT UP TO APPROVED ROOF CAP WITH WEATHER HOOD AND CORROSION RESISTANT SCREEN HAVING NOT LESS THAN 1/4 OF AN INCH AND NOT MORE THAN 1/2 OF AN INCH OPENINGS TO PROTECT THE EXHAUST DUCT IN ACCORDANCE WITH CMC 502.1

MECHANICAL FLOOR PLAN - ADMIN BUILDING

SCALE: 1/4" = 1'-0" | 1

STK ARCHITECTS, INC.
42095 ZEVO DR., TEMECULA, CALIFORNIA 92590-3780
Phone: 951.296.9110 Fax: 951.296.6079 Email: stk@stkinc.com

CONSULTANT:

REVIEWED FOR CODE COMPLIANCE

THESE DRAWINGS AND DOCUMENTS HAVE BEEN REVIEWED AND FOUND TO BE IN SUBSTANTIAL COMPLIANCE WITH THE APPLICABLE CODES. THIS REVIEW IS SUBJECT TO ALL LIMITATIONS AND CONDITIONS SET FORTH IN THE AGREEMENT BETWEEN THE OWNER AND THE BUILDING DEPARTMENT. THE CONTRACTOR IS RESPONSIBLE FOR THE CONSTRUCTION OF THE PROJECT IN COMPLIANCE WITH THE APPROVED PLANS AND ALL APPLICABLE CODES. THE CONTRACTOR SHALL NOT DEVIATE FROM THE APPROVED PLANS WITHOUT THE APPROVAL OF THE BUILDING DEPARTMENT. THE CONTRACTOR SHALL NOTIFY THE BUILDING DEPARTMENT OF ANY DEVIATIONS FROM THE APPROVED PLANS.

BY: DESIGN WEST ENGINEERING, INC.
DATE: 12/3/2025

DESIGN WEST ENGINEERING
MECHANICAL ELECTRICAL PLUMBING CONSULTANTS
BUILDING ENERGY SOLUTIONS INC.

REGISTERED PROFESSIONAL ENGINEER
STEPHEN M. WOODSON
No. 33209
SIGNED 04/15/2026
MECHANICAL
STATE OF CALIFORNIA

PROJECT ADMINISTERED BY:
CITY OF PERRIS

101 NORTH "D" STREET
PERRIS, CA 92570

PROJECT NAME:
SOUTH FIRE STATION AND ADMINISTRATIVE BUILDING

PROJECT CIP: F077

2495 MURRIETA ROAD
PERRIS, CA 92585

ISSUE INFORMATION:

DATE:	INFORMATION:
11-26-25	95% CD SUBMITTAL
02-05-26	△ 1st PC RESPONSE
02-19-26	△ 2nd PC RESPONSE

SHEET INFORMATION:

STK PROJECT NO.: 365-03-25
SCALE: AS NOTED
DATE: NOVEMBER 2025
PLOT DATE: –
DRAWN BY: JG / JW

SEAL:

SHEET TITLE:
MECHANICAL FLOOR PLAN - ADMIN BUILDING

SHEET NO.:
M2.1

25-114

R:_PROJECT\2025\25-114 Perris Fire Station_CA\CAD\25-114 Mech_ADMIN.dwg
Jan 12,2026 4:47PM

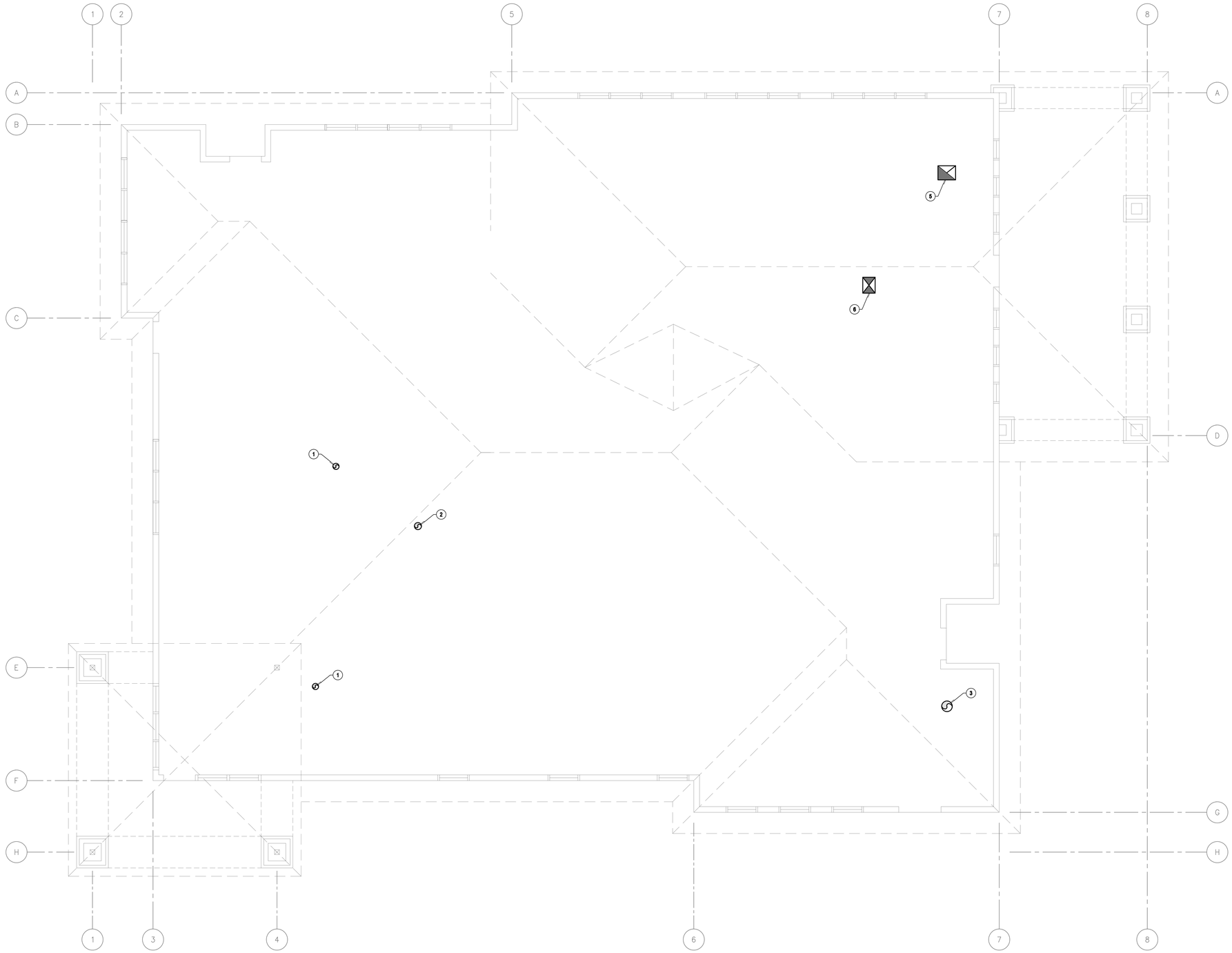

GENERAL NOTES

1. FOR LINE TYPES, SYMBOLS & ABBREVIATIONS SEE LEGEND ON SHEET M0.1.
2. ENVIRONMENT AIR DUCT EXHAUST SHALL TERMINATE NOT LESS THAN 3 FEET (914 MM) FROM A PROPERTY LINE, 10 FEET (3048 MM) FROM A FORCED AIR INLET, AND 3 FEET (914 MM) FROM OPENINGS INTO THE BUILDING. ENVIRONMENTAL EXHAUST DUCTS SHALL NOT DISCHARGE ONTO A PUBLIC WALKWAY. (502 CMC).

CONSTRUCTION NOTES

1. 7Ø EXHAUST DUCT UP TO APPROVED ROOF CAP WITH WEATHER HOOD AND CORROSION RESISTANT SCREEN HAVING NOT LESS THAN 1/4 OF AN INCH AND NOT MORE THAN 1/2 OF AN INCH OPENINGS TO PROTECT THE EXHAUST DUCT IN ACCORDANCE WITH CMC 502.1
2. 8Ø EXHAUST DUCT UP TO APPROVED ROOF CAP WITH WEATHER HOOD AND CORROSION RESISTANT SCREEN HAVING NOT LESS THAN 1/4 OF AN INCH AND NOT MORE THAN 1/2 OF AN INCH OPENINGS TO PROTECT THE EXHAUST DUCT IN ACCORDANCE WITH CMC 502.1
3. 12Ø EXHAUST DUCT UP TO APPROVED ROOF CAP WITH WEATHER HOOD AND CORROSION RESISTANT SCREEN HAVING NOT LESS THAN 1/4 OF AN INCH AND NOT MORE THAN 1/2 OF AN INCH OPENINGS TO PROTECT THE EXHAUST DUCT IN ACCORDANCE WITH CMC 502.1
4. 20"x16" EXHAUST DUCT UP TO APPROVED ROOF CAP WITH WEATHER HOOD AND CORROSION RESISTANT SCREEN HAVING NOT LESS THAN 1/4 OF AN INCH AND NOT MORE THAN 1/2 OF AN INCH OPENINGS TO PROTECT THE EXHAUST DUCT IN ACCORDANCE WITH CMC 502.1
5. 18"x14" OSA DUCT UP TO APPROVED ROOF CAP WITH WEATHER HOOD AND CORROSION RESISTANT SCREEN HAVING NOT LESS THAN 1/4 OF AN INCH AND NOT MORE THAN 1/2 OF AN INCH OPENINGS TO PROTECT THE EXHAUST DUCT IN ACCORDANCE WITH CMC 502.1

MECHANICAL ROOF PLAN - ADMIN BUILDING | SCALE: 1/4" = 1'-0" | 1

STK ARCHITECTS, INC.
42095 ZEVO DR., TEMECULA, CALIFORNIA 92590-3780
Phone: 951.296.9110 Fax: 951.296.6079 Email: stk@stkinc.com

CONSULTANT:
DESIGN WEST ENGINEERING
MECHANICAL ELECTRICAL ENERGY CONSULTANTS

REVIEWED FOR CODE COMPLIANCE
BUILDING SERVICES & SOLUTIONS INC.

REGISTERED PROFESSIONAL ENGINEER
No. 33209
SIGNED 04/15/2026
MECHANICAL
STATE OF CALIFORNIA

PROJECT ADMINISTERED BY:
CITY OF PERRIS

101 NORTH "D" STREET
PERRIS, CA 92570

PROJECT NAME:
SOUTH FIRE STATION AND ADMINISTRATIVE BUILDING

PROJECT CIP: F077

2495 MURRIETA ROAD
PERRIS, CA 92585

ISSUE INFORMATION:

DATE:	INFORMATION:
11-26-25	95% CD SUBMITTAL
02-05-26	1st PC RESPONSE
02-19-26	2nd PC RESPONSE

SHEET INFORMATION:

STK PROJECT NO.: 365-03-25
SCALE: AS NOTED
DATE: NOVEMBER 2025
PLOT DATE: –
DRAWN BY: JG / JW

SEAL:

SHEET TITLE:
MECHANICAL ROOF PLAN - ADMIN BUILDING

SHEET NO.:
M2.2

25-114

04/14/2026 4:47PM R:_PROJECTS\2025\25-114 Perris Fire Station_CAD\25-114 M-MPL_ADMIN.dwg

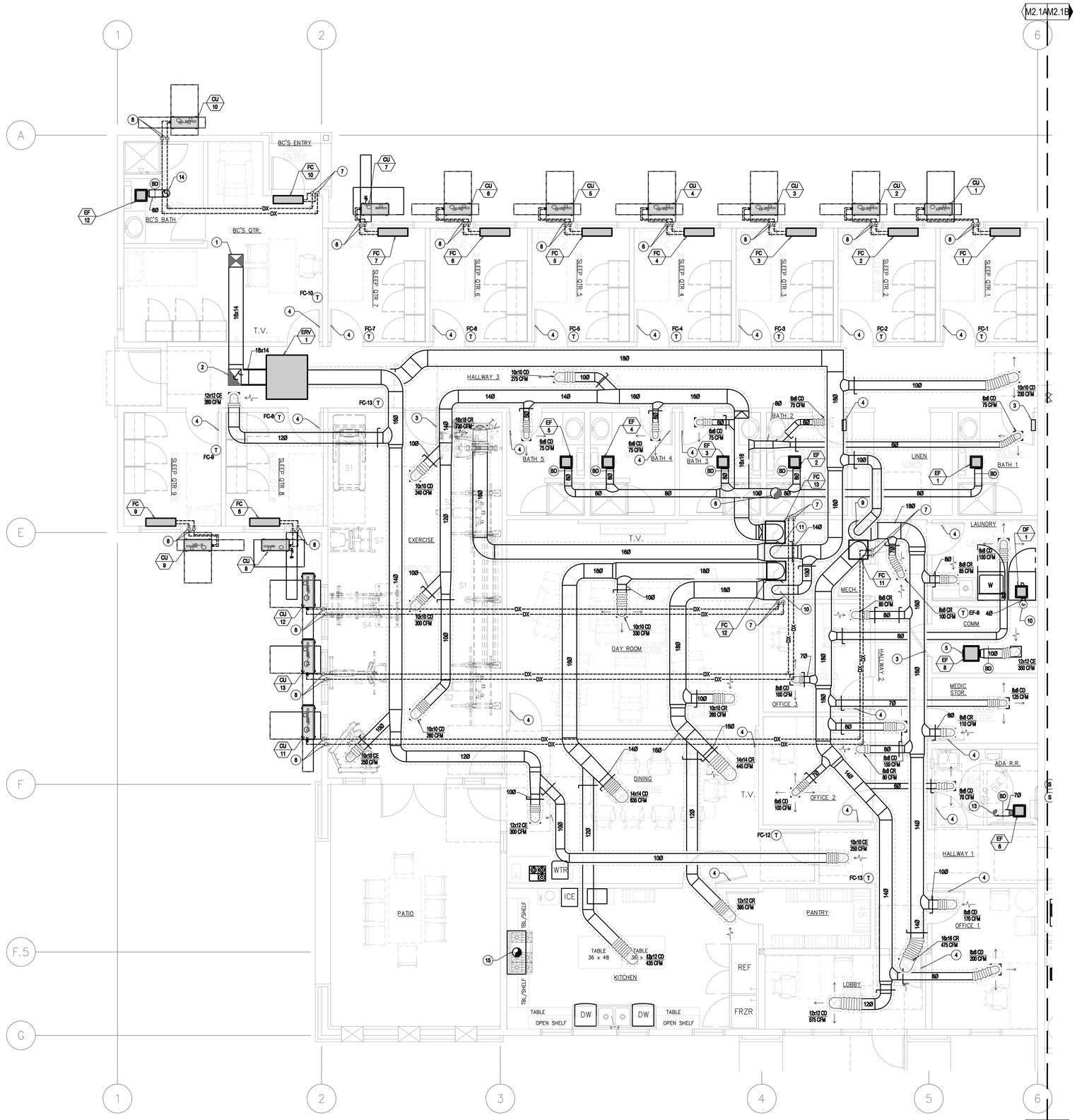

GENERAL NOTES

1. FOR LINE TYPES, SYMBOLS & ABBREVIATIONS SEE LEGEND ON SHEET M0.1.
2. ALL SPIN-IN OR TAP TYPE DUCT CONNECTIONS SHALL BE PROVIDED WITH AN EXTRACTOR.
3. T-STATS SHALL NOT BE MOUNTED IN DIRECT LINE OF ANY SUPPLY DIFFUSER OR NEAR ANY HEAT REJECTION EQUIPMENT.
4. DUCT DIMENSIONS ARE INSIDE CLEAR, ADD AN ADDITIONAL 3" MINIMUM FOR R-8 DUCT INSULATION. SIZES MAY CHANGE PER MANUFACTURER
5. ALL DUCTWORK SHALL BE HARD DUCT. FLEX DUCT MAY BE USED ONLY AT SUPPLY & RETURN OUTLETS AT A MAX. LENGTH OF 5'-0".
6. ENVIRONMENTAL AIR DUCT EXHAUST SHALL TERMINATE NOT LESS THAN 3 FEET (914 MM) FROM A PROPERTY LINE, 10 FEET (3048 MM) FROM A FORCED AIR INLET, AND 3 FEET (914 MM) FROM OPENINGS INTO THE BUILDING. ENVIRONMENTAL EXHAUST DUCTS SHALL NOT DISCHARGE ONTO A PUBLIC WALKWAY. (502 CMC).
7. ALL DUCTWORK SHALL BE MOUNTED HIGH AND TIGHT TO ROOF STRUCTURE AS POSSIBLE.
8. ALL THERMOSTATS SHALL BE PROGRAMMED TO RUN IN FAN MODE DURING OCCUPIED HOURS AND SHALL COORDINATE HOURS WITH OWNER. COOLING/ HEATING MODE SHALL RUN AS NEED, PER TEMPERATURE SET POINT AND OCCUPANT LOAD.
9. ALL RESTROOM DOORS SHALL HAVE A 1" UNDERCUT.
10. AT ALL HARD LID CEILINGS, CONTRACTOR SHALL PROVIDE FOR "MAT" CABLE DRIVEN DAMPERS. MODEL RT-150. CABLE SHALL BE ROUTED BEHIND GRILLE OPENING AND INSTALLED PER MANUFACTURER'S REQUIREMENTS.
11. 1/2 HOUR RATED WALL & CEILING ASSEMBLY AT ALL SLEEP QUARTERS - TYP. FIRE PARTITION CONTINUITY SHALL EXTEND FROM THE TOP OF THE FOUNDATION OR FLOOR / CEILING ASSEMBLY BELOW & BE SECURELY ATTACHED TO THE UNDERSIDE OF THE FLOOR OR SHEATHING, DECK OR SLAB ABOVE OR THE UNDERSIDE OF A FLOOR / CEILING OR ROOF / CEILING ASSEMBLY HAVING A FIRE-RESISTANCE RATING OF NOT LESS THAN 1/2 HOUR.

CONSTRUCTION NOTES

1. 18"X14" EXHAUST DUCT UP TO APPROVED ROOF CAP WITH WEATHER HOOD AND CORROSION RESISTANT SCREEN HAVING NOT LESS THAN 1/4 OF AN INCH AND NOT MORE THAN 1/2 OF AN INCH OPENINGS TO PROTECT THE EXHAUST DUCT IN ACCORDANCE WITH CMC 502.1
2. 16"x14" OSA DUCT UP TO APPROVED ROOF CAP WITH WEATHER HOOD AND CORROSION RESISTANT SCREEN HAVING NOT LESS THAN 1/4 OF AN INCH AND NOT MORE THAN 1/2 OF AN INCH OPENINGS TO PROTECT THE EXHAUST DUCT IN ACCORDANCE WITH CMC 502.1
3. 12"x18" LOUVER LOW ON DOOR WITH 50% FREE AREA. MOUNT DOOR LOUVER 18" A.F.F.
4. PROVIDE 1" UNDERCUT BELOW DOOR
5. EXHAUST FAN TO DISCHARGE INTO CEILING SPACE
6. 10"Ø EXHAUST DUCT UP TO APPROVED ROOF CAP WITH WEATHER HOOD AND CORROSION RESISTANT SCREEN HAVING NOT LESS THAN 1/4 OF AN INCH AND NOT MORE THAN 1/2 OF AN INCH OPENINGS TO PROTECT THE EXHAUST DUCT IN ACCORDANCE WITH CMC 502.1
7. DX PIPING DN IN WALL TO FAN COIL
8. DX PIPING DN IN WALL AND ROUTE OUT TO CONDENSING UNIT
9. 10"ø OSA DUCT DN TO RETURN PLENUM, MVD TO BE SET AT MIN OSA TO 300 CFM FOR FC-11
10. 10"ø OSA DUCT DN TO RETURN PLENUM, MVD TO BE SET AT MIN OSA TO 350 CFM FOR FC-12
11. 14"ø OSA DUCT DN TO RETURN PLENUM, MVD TO BE SET AT MIN OSA TO 650 CFM FOR FC-13
12. 30"x24" LOUVER CENTER BELOW WINDOW WITH 50% FREE AREA TO ALLOW 1050 CFM INTO UTILITY ROOM
13. 8"Ø EXHAUST DUCT UP TO APPROVED ROOF CAP WITH WEATHER HOOD AND CORROSION RESISTANT SCREEN HAVING NOT LESS THAN 1/4 OF AN INCH AND NOT MORE THAN 1/2 OF AN INCH OPENINGS TO PROTECT THE EXHAUST DUCT IN ACCORDANCE WITH CMC 502.1
14. 4"Ø EXHAUST DUCT DN TO DRYER. ROUTE 4"Ø EXHAUST DUCT UP FROM DRYER FAN TO APPROVED ROOF CAP WITH WEATHER HOOD AND CORROSION RESISTANT SCREEN HAVING NOT LESS THAN 1/4 OF AN INCH AND NOT MORE THAN 1/2 OF AN INCH OPENINGS TO PROTECT THE EXHAUST DUCT IN ACCORDANCE WITH CMC 502.1
15. 8"Ø RANGE VENT DUCT UP THRU ROOF TO ROOF CAP. 600 CFM KITCHEN HOOD. VERIFY EXACT SIZE WITH HOOD MANUFACTURER PRIOR TO START OF WORK

MECHANICAL ENLARGED FLOOR PLAN - FIRE STATION

SCALE: 1/4" = 1'-0" | 1

STK ARCHITECTS, INC.
42095 ZEVO DR., TEMECULA, CALIFORNIA 92590-3780
Phone: 951.296.9110 Fax: 951.296.6079 Email: stk@stkinc.com

CONSULTANT:

DESIGN WEST ENGINEERING
MECHANICAL | ELECTRICAL | ENERGY CONSULTANTS
FIRE/LIFE SAFETY CONSULTANTS
SOLUTIONS INC.

REVIEWED FOR CODE COMPLIANCE

THESE PLANS AND CODE DOCUMENTS HAVE BEEN REVIEWED AND FOUND TO BE IN COMPLIANCE WITH THE 2022 CALIFORNIA CODES. THIS REVIEW IS SUBJECT TO ALL CONDITIONS AND LIMITATIONS NOTED IN THE LETTER DATED [illegible]. THE CONTRACTOR SHALL KEEP A COPY OF THESE PLANS ON THE JOB SITE AT ALL TIMES. CONTRACTOR IS RESPONSIBLE FOR THE CONSTRUCTION OF THE PROJECT IN ACCORDANCE WITH THE APPROVED PLANS AND ALL APPLICABLE CODES. THE APPROVAL OF THESE PLANS DOES NOT PERMIT THE CONTRACTOR TO VIOLATE ANY CODE, EVEN IF SUCH VIOLATION IS NOT SPECIFICALLY INDICATED ON THE PLANS. CITY OF PERRIS BUILDING & SAFETY DEPARTMENT

PROJECT ADMINISTERED BY:
CITY OF PERRIS

101 NORTH "D" STREET
PERRIS, CA 92570

PROJECT NAME:
SOUTH FIRE STATION AND ADMINISTRATIVE BUILDING

PROJECT CIP: F077

2495 MURRIETA ROAD
PERRIS, CA 92585

ISSUE INFORMATION:

DATE:	INFORMATION:
11-25-25	95% CD SUBMITTAL
02-05-26	1st PC RESPONSE
02-19-26	2nd PC RESPONSE

SHEET INFORMATION:

STK PROJECT NO.: 365-03-25
SCALE: AS NOTED
DATE: NOVEMBER 2025
PLOT DATE: –
DRAWN BY: JG / JW

SEAL:

SHEET TITLE:
MECHANICAL FLOOR PLAN - ENLARGED FLOOR PLAN - FIRE STATION

SHEET NO.:
M3.1A

M:\PROJECTS\2025\25-114 Perris Fire Station_CADD\25-114 M3.1APH.dwg
24/7/2025 4:47PM

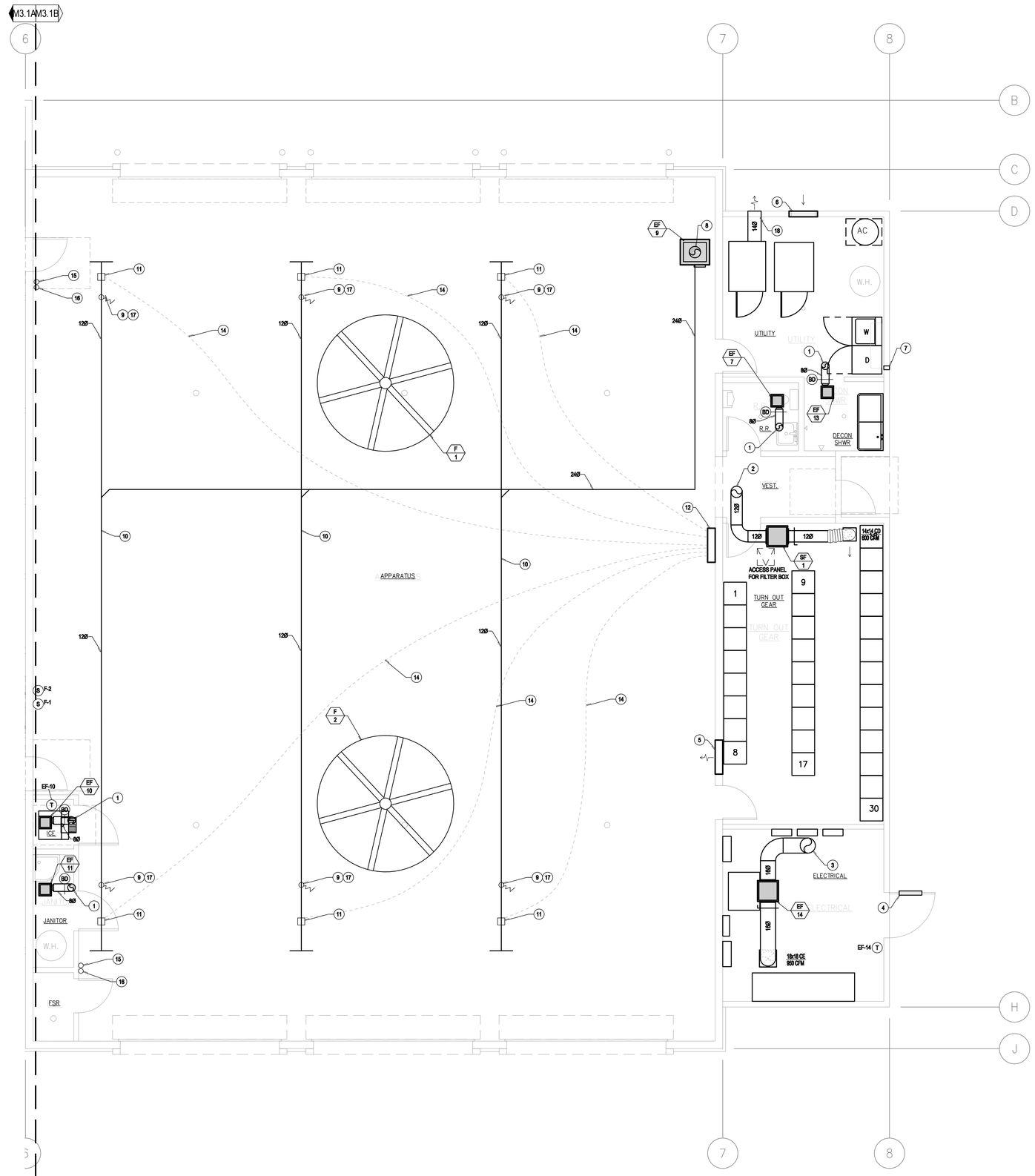

GENERAL NOTES

1. FOR LINE TYPES, SYMBOLS & ABBREVIATIONS SEE LEGEND ON SHEET M0.1.
2. ALL SPIN-IN OR TAP TYPE DUCT CONNECTIONS SHALL BE PROVIDED WITH AN EXTRACTOR.
3. T-STATS SHALL NOT BE MOUNTED IN DIRECT LINE OF ANY SUPPLY DIFFUSER OR NEAR ANY HEAT REJECTION EQUIPMENT.
4. DUCT DIMENSIONS ARE INSIDE CLEAR, ADD AN ADDITIONAL 3" MINIMUM FOR R-8 DUCT INSULATION. SIZES MAY CHANGE PER MANUFACTURER
5. ALL DUCTWORK SHALL BE HARD DUCT. FLEX DUCT MAY BE USED ONLY AT SUPPLY & RETURN OUTLETS AT A MAX. LENGTH OF 5'-0".
6. ENVIRONMENTAL AIR DUCT EXHAUST SHALL TERMINATE NOT LESS THAN 3 FEET (914 MM) FROM A PROPERTY LINE, 10 FEET (3048 MM) FROM A FORCED AIR INLET, AND 3 FEET (914 MM) FROM OPENINGS INTO THE BUILDING. ENVIRONMENTAL EXHAUST DUCTS SHALL NOT DISCHARGE ONTO A PUBLIC WALKWAY. (502 CMC).
7.
8. ALL DUCTWORK SHALL BE MOUNTED HIGH AND TIGHT TO ROOF STRUCTURE AS POSSIBLE.
9. ALL THERMOSTATS SHALL BE PROGRAMMED TO RUN IN FAN MODE DURING OCCUPIED HOURS AND SHALL COORDINATE HOURS WITH OWNER. COOLING/ HEATING MODE SHALL RUN AS NEED, PER TEMPERATURE SET POINT AND OCCUPANT LOAD.
10. ALL RESTROOM DOORS SHALL HAVE A 1" UNDERCUT.
11. AT ALL HARD LID CEILINGS, CONTRACTOR SHALL PROVIDE FOR "MAT" CABLE DRIVEN DAMPERS. MODEL RT-150. CABLE SHALL BE ROUTED BEHIND GRILLE OPENING AND INSTALLED PER MANUFACTURER'S REQUIREMENTS.

CONSTRUCTION NOTES

1. 8'Ø EXHAUST DUCT UP TO APPROVED ROOF CAP WITH WEATHER HOOD AND CORROSION RESISTANT SCREEN HAVING NOT LESS THAN 1/4 OF AN INCH AND NOT MORE THAN 1/2 OF AN INCH OPENINGS TO PROTECT THE EXHAUST DUCT IN ACCORDANCE WITH CMC 502.1
2. 12"Ø SUPPLY DUCT UP TO APPROVED ROOF CAP WITH WEATHER HOOD AND CORROSION RESISTANT SCREEN HAVING NOT LESS THAN 1/4 OF AN INCH AND NOT MORE THAN 1/2 OF AN INCH OPENINGS TO PROTECT THE EXHAUST DUCT IN ACCORDANCE WITH CMC 502.1
3. 16"Ø EXHAUST DUCT UP TO APPROVED ROOF CAP WITH WEATHER HOOD AND CORROSION RESISTANT SCREEN HAVING NOT LESS THAN 1/4 OF AN INCH AND NOT MORE THAN 1/2 OF AN INCH OPENINGS TO PROTECT THE EXHAUST DUCT IN ACCORDANCE WITH CMC 502.1
4. 24"x24" LOUVER LOW ON DOOR WITH 50% FREE AREA. MOUNT DOOR LOUVER 18" A.F.F.
5. 20"x18" LOUVER HIGH IN WALL WITH MIN 50% FREE AREA
6. 36"x18" LOUVER HIGH IN WALL WITH MIN 50% FREE AREA
7. 4"Ø FLEX EXHAUST DUCT FROM DRYER TO EXTERIOR WALL
8. 12" ROUND VEHICLE EXHAUST DUCT UP THROUGH ROOF TO APPROVED ROOF CAP WITH WEATHER HOOD AND CORROSION-RESISTANT SCREEN HAVING NOT LESS THAN 1/4" AND NOT MORE THAN 1/2" OPENINGS TO PROTECT THE EXHAUST DUCT IN ACCORDANCE WITH CMC 502.1. TERMINATE MINIMUM 3'-0" ABOVE FINISHED ROOF. MAINTAIN DUCT 3'-0" AWAY FROM EXTERIOR WALLS AND 10'-0" FROM BUILDING OPENINGS.
9. (PLYMOVENT) FLEXIBLE EXHAUST HOSE WITH FITTINGS AND CONNECTION AS SPECIFIED AND PER MANUFACTURER'S RECOMMENDATIONS.
10. (PLYMOVENT) STRAIGHT RAIL SYSTEM. MOUNTING SHALL BE FIELD VERIFIED BY A MANUFACTURER REPRESENTATIVE. SEE ARCHITECTURAL DRAWINGS FOR SUPPORT. MOUNT BOTTOM OF RAIL AT 14'-0" A.F.F. CONTRACTOR SHALL PROVIDE STRUCTURAL CROSS MEMBER AS REQUIRED BY THE MANUFACTURER'S INSTALLATION REQUIREMENTS.
11. SENSOR LOCATION FOR AUTO START. LOCATION SHALL BE WITHIN 5'-0" OF FRONT AND BACK OF RAIL. PROVIDE COMPRESSED AIR FITTING (SEE PLUMBING DRAWINGS). REFER TO MANUFACTURER'S INSTALLATION REQUIREMENTS.
12. (PLYMOVENT) "CONTROLPRO" VEHICLE EXHAUST REMOVAL SYSTEM CONTROL PANEL. VERIFY EXACT LOCATION WITH OWNER PRIOR TO START OF WORK. INSTALL PER MANUFACTURER'S INSTRUCTIONS.
13. 7" DIA. VEHICLE EXHAUST DUCT. SEE MANUFACTURER'S SPECIFICATIONS FOR INSTALLATION AND MATERIAL REQUIREMENTS.
14. ROUTE LOW VOLTAGE CONTROL WIRING IN CONDUIT TO SENSOR CONNECTION LOCATION ON EACH RAIL. CONCEAL ALL WIRING AND INSTALL PER MANUFACTURER'S INSTRUCTIONS.
15. (PLYMOVENT) VEHICLE EXHAUST CRAB CRAWL RETURN SYSTEM EMERGENCY START SWITCH. COORDINATE FINAL LOCATION WITH END USER BEFORE START OF WORK. MOUNT PER MANUFACTURER'S INSTRUCTIONS AND PROVIDE ALL CONTROL WIRING IN CONDUIT.
16. (PLYMOVENT) VEHICLE EXHAUST CRAB CRAWL RETURN SYSTEM EMERGENCY STOP SWITCH. COORDINATE FINAL LOCATION WITH END USER BEFORE START OF WORK. MOUNT PER MANUFACTURER'S INSTRUCTIONS AND PROVIDE ALL CONTROL WIRING IN CONDUIT.
17. (PLYMOVENT) VEHICLE EXHAUST CRAB CRAWL SYSTEM. PROVIDE ALL CONTROL WIRING IN CONDUIT. SEE ELECTRICAL PLANS FOR POWER REQUIREMENTS.
18. 14"Ø EXHAUST DUCT FROM COMMERCIAL DRYER TO EXTERIOR WALL

MECHANICAL ENLARGED FLOOR PLAN - APPARATUS BAY

SCALE: 1/4" = 1'-0" | 1

STK ARCHITECTS, INC.
42095 ZEVO DR., TEMECULA, CALIFORNIA 92590-3780
Phone: 951.296.9110 Fax: 951.296.6079 Email: stk@stkinc.com

CONSULTANT:
DESIGN WEST ENGINEERING
MECHANICAL / ELECTRICAL / ENERGY CONSULTANTS
BUILDING ENERGY SOLUTIONS INC.

REVIEWED FOR CODE COMPLIANCE

THESE PLANS AND DOCUMENTS HAVE BEEN REVIEWED AND FOUND TO BE IN SUBSTANTIAL COMPLIANCE WITH THE 2022 CALIFORNIA BUILDING CODE. THE CONTRACTOR IS RESPONSIBLE FOR THE CONSTRUCTION OF THE BUILDING IN ACCORDANCE WITH THE 2022 CBC. THE CONTRACTOR SHALL ALSO BE RESPONSIBLE FOR ALL CONSTRUCTION, WORK, MATERIALS, EQUIPMENT, APPLIANCES OR ARRANGEMENTS NOT REGULATED BY THE 2022 CBC. THE CONTRACTOR SHALL COMPLY WITH ALL CONDITIONS SPECIFIED IN THIS ACTION. BUILDING DEPARTMENT APPROVAL

Reviewed for Code Compliance
Date: 11/26/2025
By: Building Department

REGISTERED PROFESSIONAL ENGINEER
Stephen Wiedenbeck
No. 33209
SIGNED:04/15/2026
MECHANICAL
STATE OF CALIFORNIA

PROJECT ADMINISTERED BY:
CITY OF PERRIS

101 NORTH "D" STREET
PERRIS, CA 92570

PROJECT NAME:
SOUTH FIRE STATION AND ADMINISTRATIVE BUILDING

PROJECT CIP: F077

2495 MURRIETA ROAD
PERRIS, CA 92585

ISSUE INFORMATION:

DATE:	INFORMATION:
11-26-25	95% CD SUBMITTAL
02-05-26	1st PC RESPONSE
02-19-26	2nd PC RESPONSE

SHEET INFORMATION:

STK PROJECT NO.: 365-03-25
SCALE: AS NOTED
DATE: NOVEMBER 2025
PLOT DATE: –
DRAWN BY: JG / JW

SEAL:

SHEET TITLE:
MECHANICAL FLOOR PLAN - ENLARGED FLOOR PLAN - APPARATUS BAY

SHEET NO.:
M3.1B

M:\PROJECTS\2025\25-114 Perris Fire Station_CA\25-114 M.rvt 11/26/2025 4:47 PM

25-114

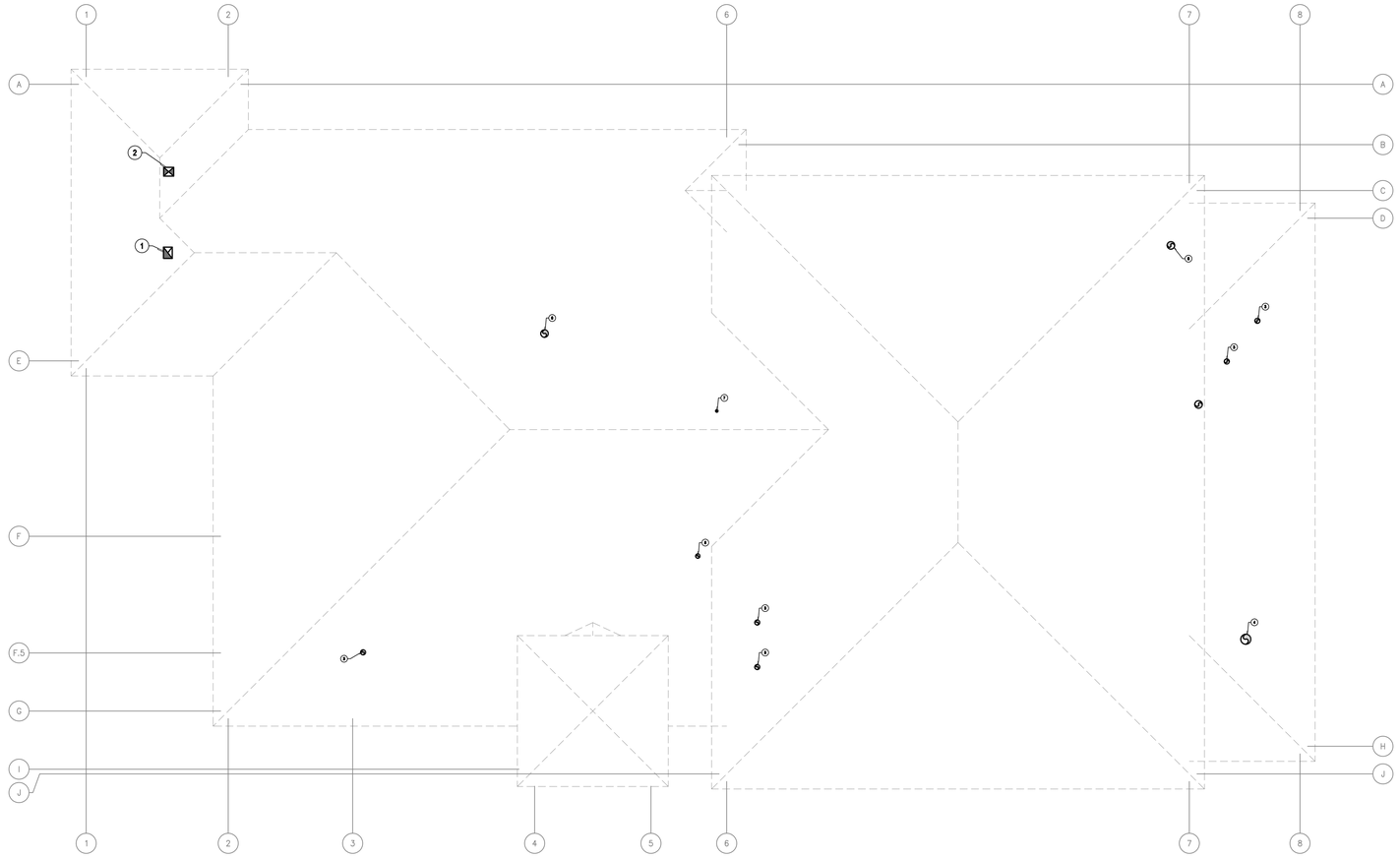

MECHANICAL ENLARGED FLOOR PLAN - FIRE STATION

SCALE: 1/8" = 1'-0"

1

GENERAL NOTES

1. FOR LINE TYPES, SYMBOLS & ABBREVIATIONS SEE LEGEND ON SHEET M0.1.
2. ENVIRONMENT AIR DUCT EXHAUST SHALL TERMINATE NOT LESS THAN 3 FEET (914 MM) FROM A PROPERTY LINE, 10 FEET (3048 MM) FROM A FORCED AIR INLET, AND 3 FEET (914 MM) FROM OPENINGS INTO THE BUILDING. ENVIRONMENTAL EXHAUST DUCTS SHALL NOT DISCHARGE ONTO A PUBLIC WALKWAY. (502 CMC).

CONSTRUCTION NOTES

1. 18"X14" EXHAUST DUCT UP TO APPROVED ROOF CAP WITH WEATHER HOOD AND CORROSION RESISTANT SCREEN HAVING NOT LESS THAN 1/4 OF AN INCH AND NOT MORE THAN 1/2 OF AN INCH OPENINGS TO PROTECT THE EXHAUST DUCT IN ACCORDANCE WITH CMC 502.1
2. 16"x14" OSA DUCT UP TO APPROVED ROOF CAP WITH WEATHER HOOD AND CORROSION RESISTANT SCREEN HAVING NOT LESS THAN 1/4 OF AN INCH AND NOT MORE THAN 1/2 OF AN INCH OPENINGS TO PROTECT THE EXHAUST DUCT IN ACCORDANCE WITH CMC 502.1
3. 8"Ø EXHAUST DUCT UP TO APPROVED ROOF CAP WITH WEATHER HOOD AND CORROSION RESISTANT SCREEN HAVING NOT LESS THAN 1/4 OF AN INCH AND NOT MORE THAN 1/2 OF AN INCH OPENINGS TO PROTECT THE EXHAUST DUCT IN ACCORDANCE WITH CMC 502.1
4. 16"Ø EXHAUST DUCT UP TO APPROVED ROOF CAP WITH WEATHER HOOD AND CORROSION RESISTANT SCREEN HAVING NOT LESS THAN 1/4 OF AN INCH AND NOT MORE THAN 1/2 OF AN INCH OPENINGS TO PROTECT THE EXHAUST DUCT IN ACCORDANCE WITH CMC 502.1
5. 7"Ø EXHAUST DUCT UP TO APPROVED ROOF CAP WITH WEATHER HOOD AND CORROSION RESISTANT SCREEN HAVING NOT LESS THAN 1/4 OF AN INCH AND NOT MORE THAN 1/2 OF AN INCH OPENINGS TO PROTECT THE EXHAUST DUCT IN ACCORDANCE WITH CMC 502.1
6. 12"Ø EXHAUST DUCT UP TO APPROVED ROOF CAP WITH WEATHER HOOD AND CORROSION RESISTANT SCREEN HAVING NOT LESS THAN 1/4 OF AN INCH AND NOT MORE THAN 1/2 OF AN INCH OPENINGS TO PROTECT THE EXHAUST DUCT IN ACCORDANCE WITH CMC 502.1
7. 4"Ø EXHAUST DUCT UP FROM DRYER FAN TO APPROVED ROOF CAP WITH WEATHER HOOD AND CORROSION RESISTANT SCREEN HAVING NOT LESS THAN 1/4 OF AN INCH AND NOT MORE THAN 1/2 OF AN INCH OPENINGS TO PROTECT THE EXHAUST DUCT IN ACCORDANCE WITH CMC 502.1

STK ARCHITECTURE, INC.
42095 ZEVO DR., TEMECULA, CALIFORNIA 92590-3780
Phone: 951.296.9110 Fax: 951.296.6079 Email: stk@stkinc.com

CONSULTANT:

REVIEWED FOR CODE COMPLIANCE

THESE DESIGN DOCUMENTS HAVE BEEN REVIEWED AND FOUND TO BE IN SUBSTANTIAL COMPLIANCE WITH THE APPLICABLE CODES IN EFFECT AT THE TIME OF PLAN SUBMITTAL. THE CONTRACTOR IS RESPONSIBLE FOR COMPLIANCE WITH ALL APPLICABLE CODES AND REGULATIONS. THE CONTRACTOR SHALL VERIFY AND COORDINATE ALL CONDITIONS AND DIMENSIONS IN THE FIELD. CONTRACTOR SHALL NOTIFY THE DESIGN PROFESSIONAL OF ANY DISCREPANCIES BEFORE PROCEEDING WITH THE WORK. CONTRACTOR SHALL OBTAIN ALL PERMITS, INSPECTIONS AND APPROVALS REQUIRED FOR THE WORK. REVIEW BY THE BUILDING DEPARTMENT DOES NOT RELIEVE THE CONTRACTOR OF THE RESPONSIBILITY FOR COMPLIANCE WITH ALL APPLICABLE CODES AND REGULATIONS.

DESIGN WEST ENGINEERING
MECHANICAL ELECTRICAL ENERGY CONSULTANTS
BUILDING ENERGY SOLUTIONS INC.

REGISTERED PROFESSIONAL ENGINEER
Stephen Wilson Johnson
No. 33209
SIGNED:04/15/2026
MECHANICAL
STATE OF CALIFORNIA

PROJECT ADMINISTERED BY:

CITY OF PERRIS

101 NORTH "D" STREET
PERRIS, CA 92570

PROJECT NAME:

SOUTH FIRE STATION AND ADMINISTRATIVE BUILDING

PROJECT CIP: F077

2495 MURRIETA ROAD
PERRIS, CA 92585

ISSUE INFORMATION:

DATE:	INFORMATION:
11-26-25	95% CD SUBMITTAL
02-05-26	1st PC RESPONSE
02-19-26	2nd PC RESPONSE

SHEET INFORMATION:

STK PROJECT NO.: 365-03-25
SCALE: AS NOTED
DATE: NOVEMBER 2025
PLOT DATE: –
DRAWN BY: JG / JW

SEAL:

SHEET TITLE:

MECHANICAL ROOF PLAN - FIRE STATION

SHEET NO.:

M3.2

M:\PROJECTS\2025\25-114 Perris Fire Station_CA\25-114 M.rvt 11/26/2025 4:47 PM

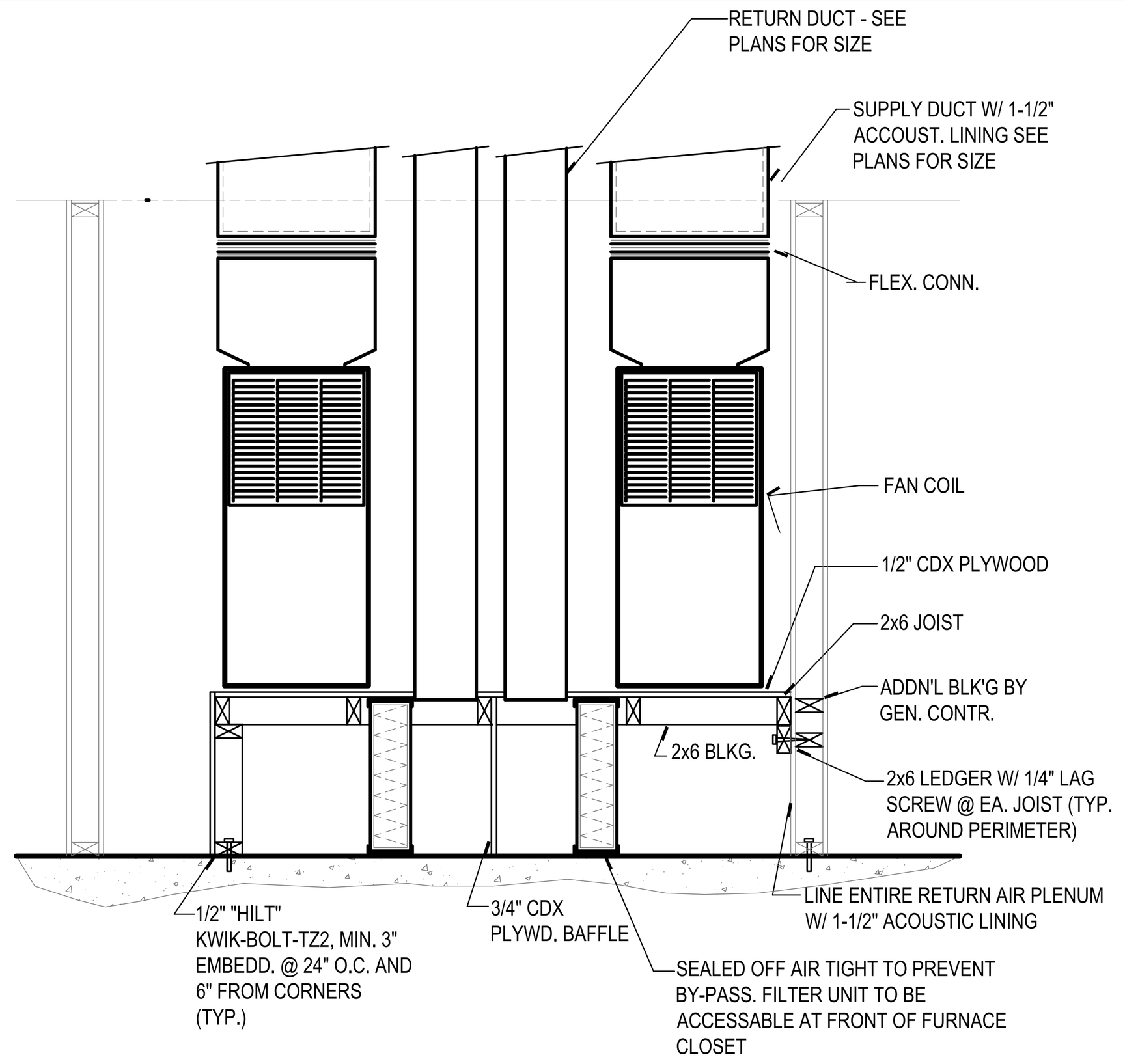

FAN COIL MOUNTING 13

PIPE SIZE IN INCHES	MAXIMUM SPAN BETWEEN SUPPORT HANGERS O.C. STEEL	COPPER	HANGER ROD DIAMETER SIZE	MAX ROD LENGTH, NO STIFFENER	MAX ROD LENGTH, WITH STIFFENER	LONGITUDINAL ANGLE BRACE (2)	VERTICAL HANGER ANGLE (STIFFNER) (1)	TRANSVERSE ANGLE BRACE (2)	BOLT SIZE
REFRIGERANT PIPE									
1/2 thru 3/4	6'-0"	5'-0"	3/8"	16"	68"	1-1/2 x 1-1/2 x 18 ga @ 80'-0" O.C.	1 x 1 x 18ga	1-1/2 x 1-1/2 x 18 ga @ 40'-0" O.C.	1/4"
1	6'-0"	6'-0"	3/8"	16"	68"	1-1/2 x 1-1/2 x 18 ga @ 80'-0" O.C.	1 x 1 x 18ga	1-1/2 x 1-1/2 x 18 ga @ 40'-0" O.C.	1/4"
1-1/2 thru 2	10'-0"	8'-0"	3/8"	16"	68"	1-1/2 x 1-1/2 x 18 ga @ 80'-0" O.C.	1 x 1 x 18ga	2-1/2 x 2-1/2 x 16 ga @ 40'-0" O.C.	1/4"

NOTES:
1. VERTICAL ANGLE ONLY REQUIRED WHEN ROD MAXIMUM LENGTH IS EXCEEDED.
2. BRACING MAY BE OMITTED WHERE TOP OF PIPE IS 12" OR LESS FROM BOTTOM OF HANGER SUPPORT CONNECTED TO STRUCTURE

DX PIPE SUPPORT SCHEDULE 9

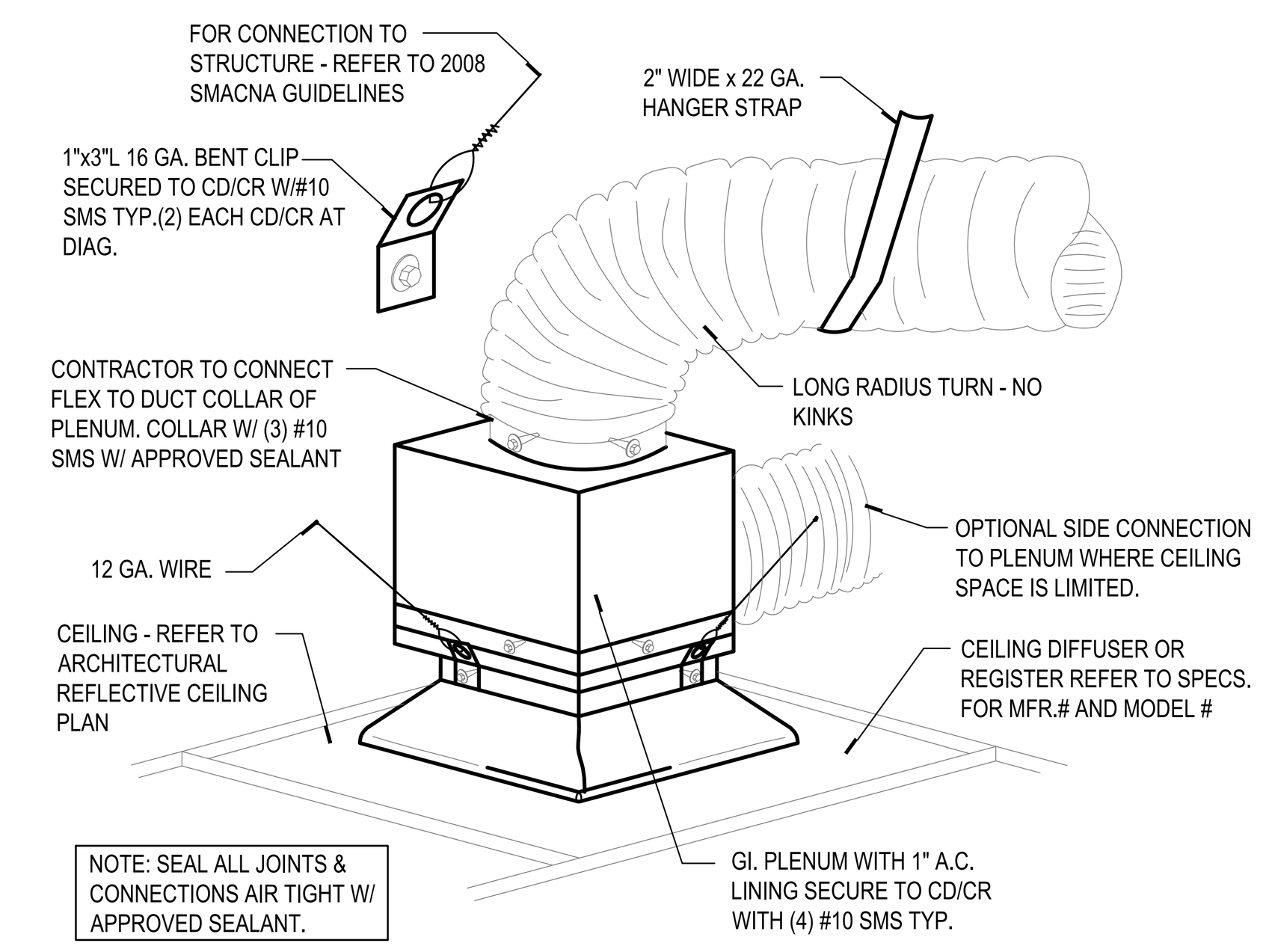

AIR DISTRIBUTION 5

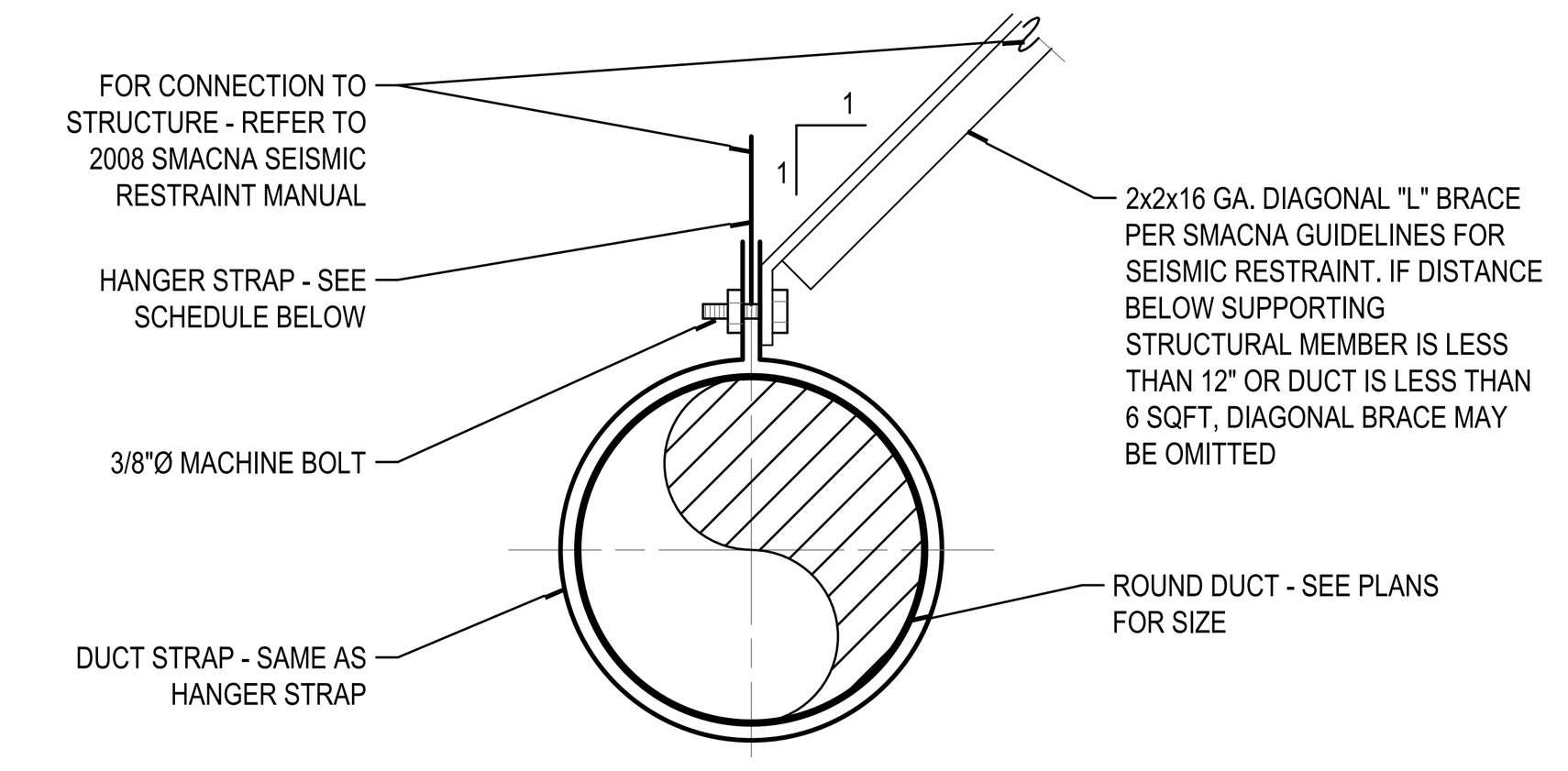

NOTE: PER 2020 SMACNA HVAC DUCT CONSTRUCTION STANDARDS AND 2022 CMC SECTION 602 & 603

HANGER STRAP SCHEDULE			
12'-0" O/C MAX SPACING			
DUCT DIAMETER	SINGLE HANGER MAX ALLOWABLE LOAD	HANGER SIZE	MATERIAL
UP THRU 24"	260 LBS	1" x 22 GA.	G.I. STEEL
25" TO 36"	320 LBS	1" x 20 GA.	G.I. STEEL
37" TO 50"	320 LBS	(2) 1" x 20 GA.	G.I. STEEL
51" TO 60"	420 LBS	(2) 1" x18 GA.	G.I. STEEL
61" TO 84"	700 LBS	(2) 1" x 16 GA.	G.I. STEEL
85" TO 96"	1100 LBS	(2) 1-1/2" x 16 GA.	G.I. STEEL

DUCT SUPPORT - ROUND 1

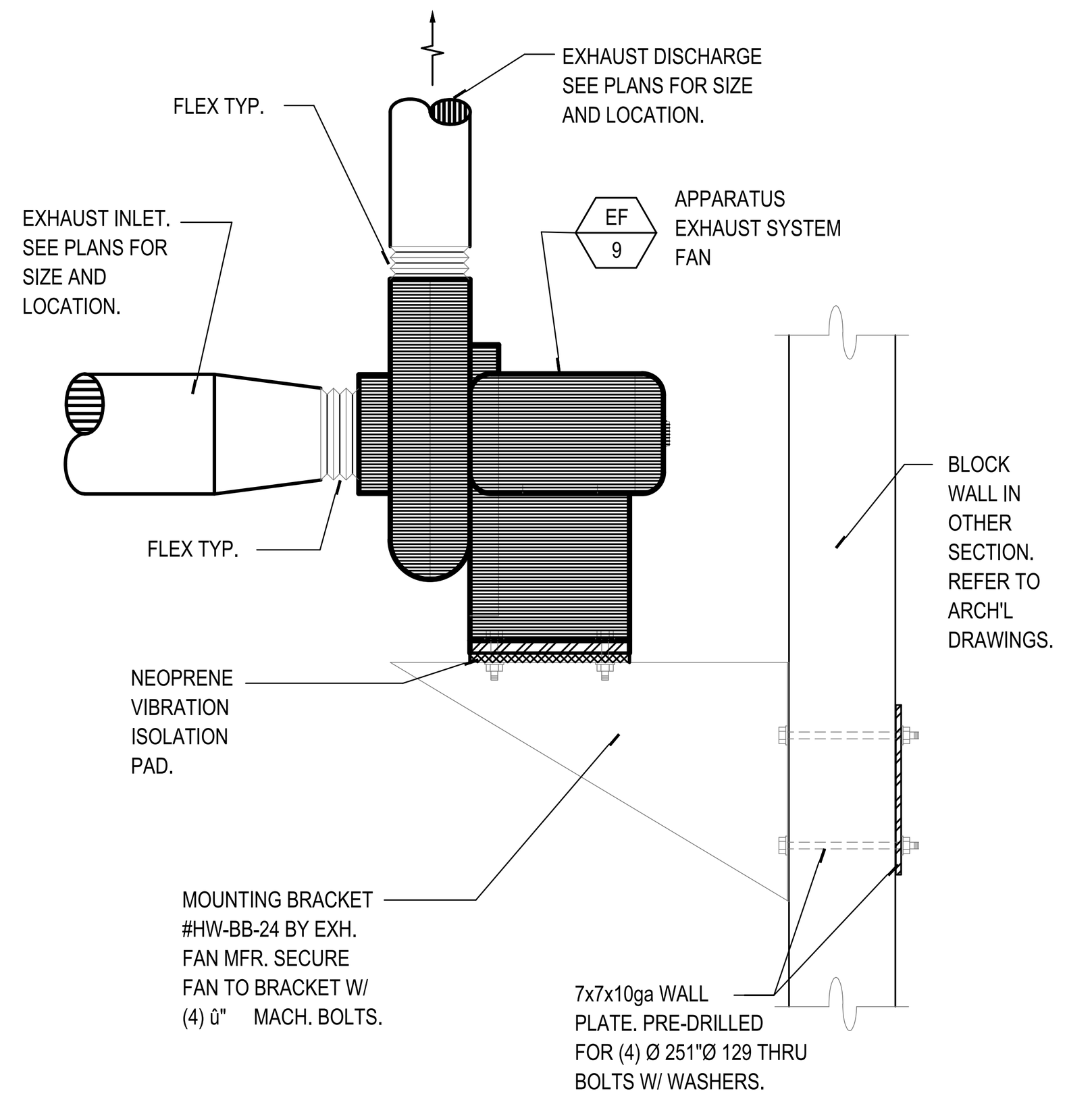

APPARATUS VEHICLE EXHAUST FAN 14

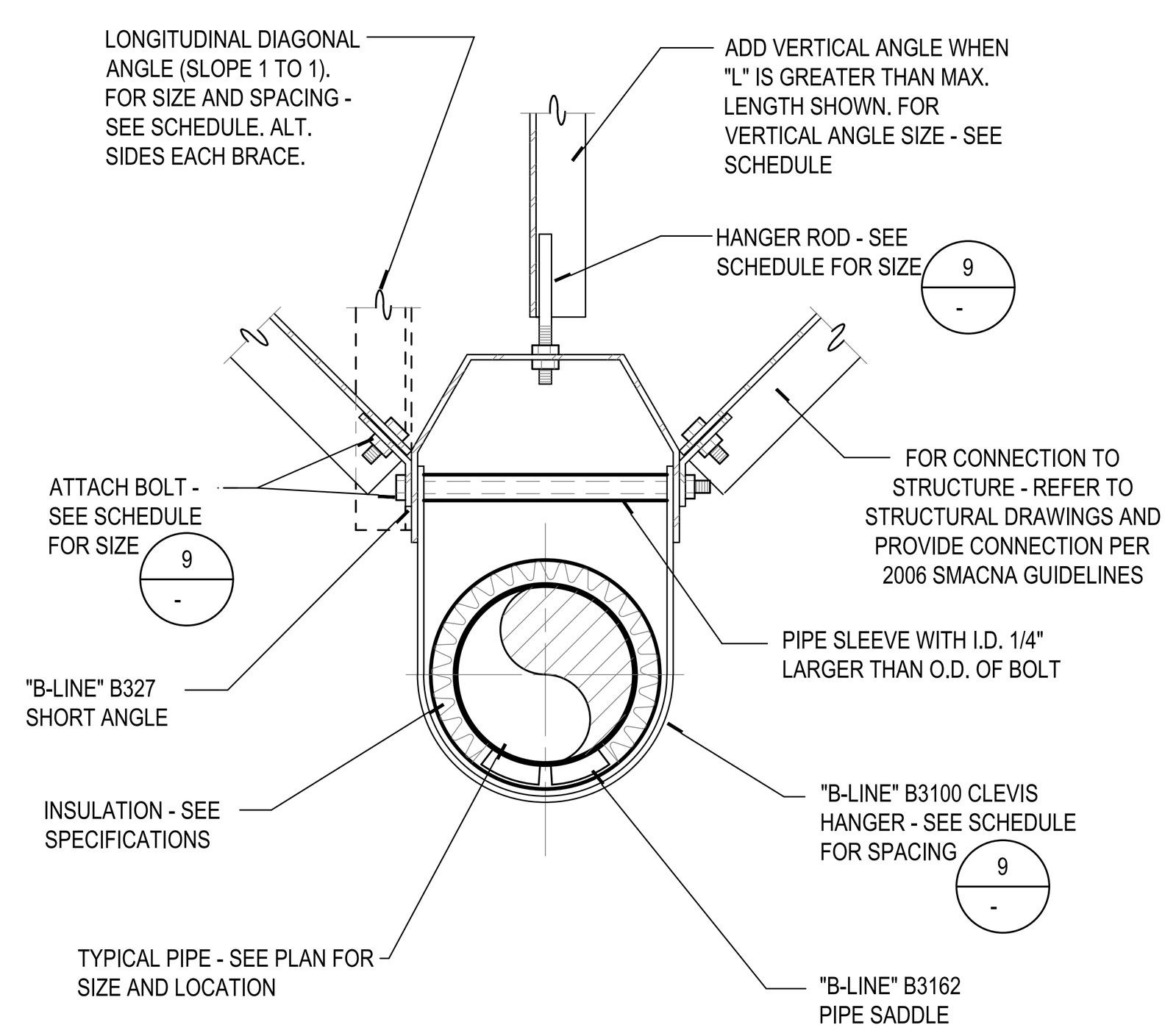

NOTE:
DIAGONAL ANGLE BRACE IS REQUIRED FOR ALL PIPES WITH 2 1/2" I.D. AND LARGER

DX PIPING SUPPORT 10

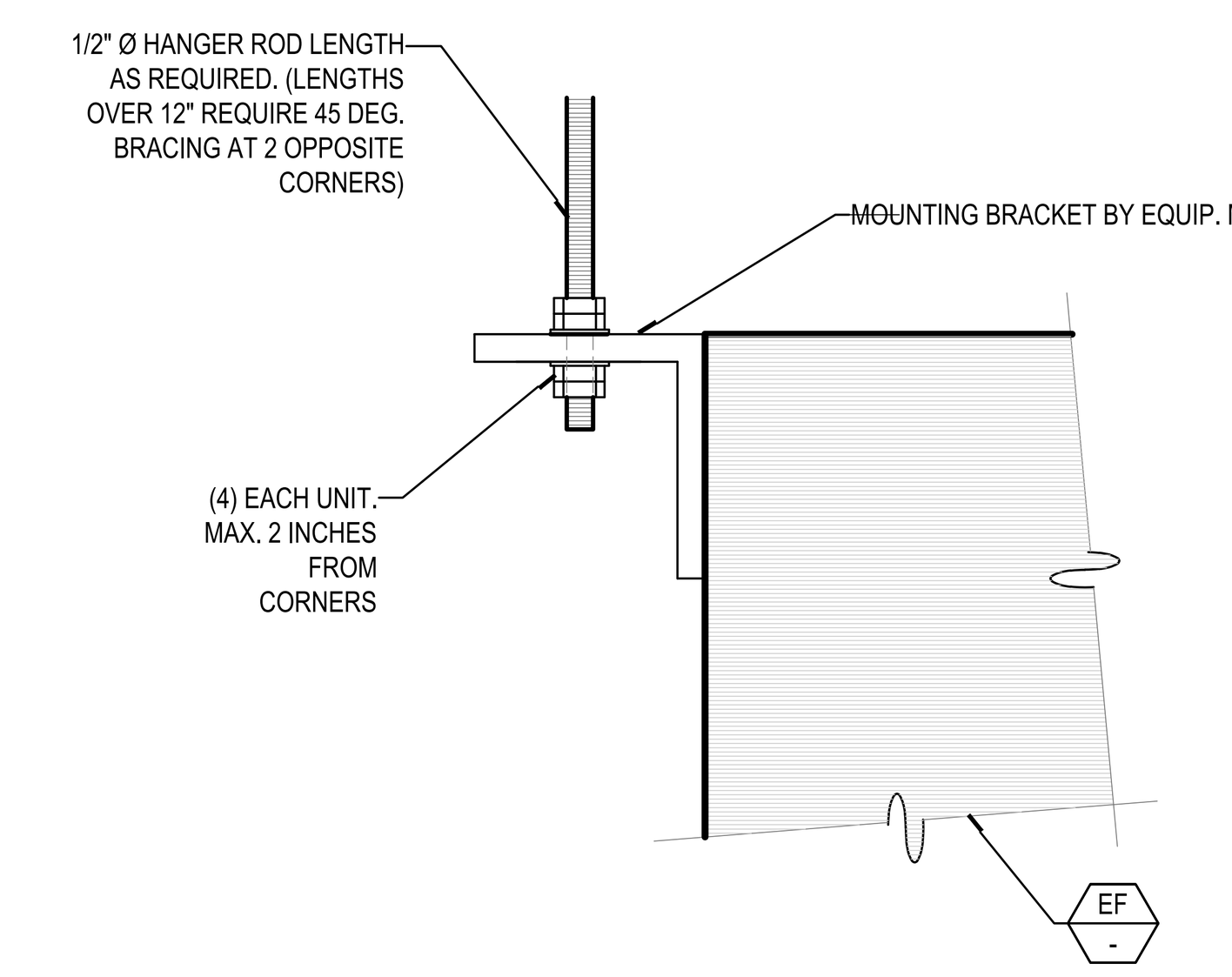

EXHAUST FAN MOUNTING - INLINE 6

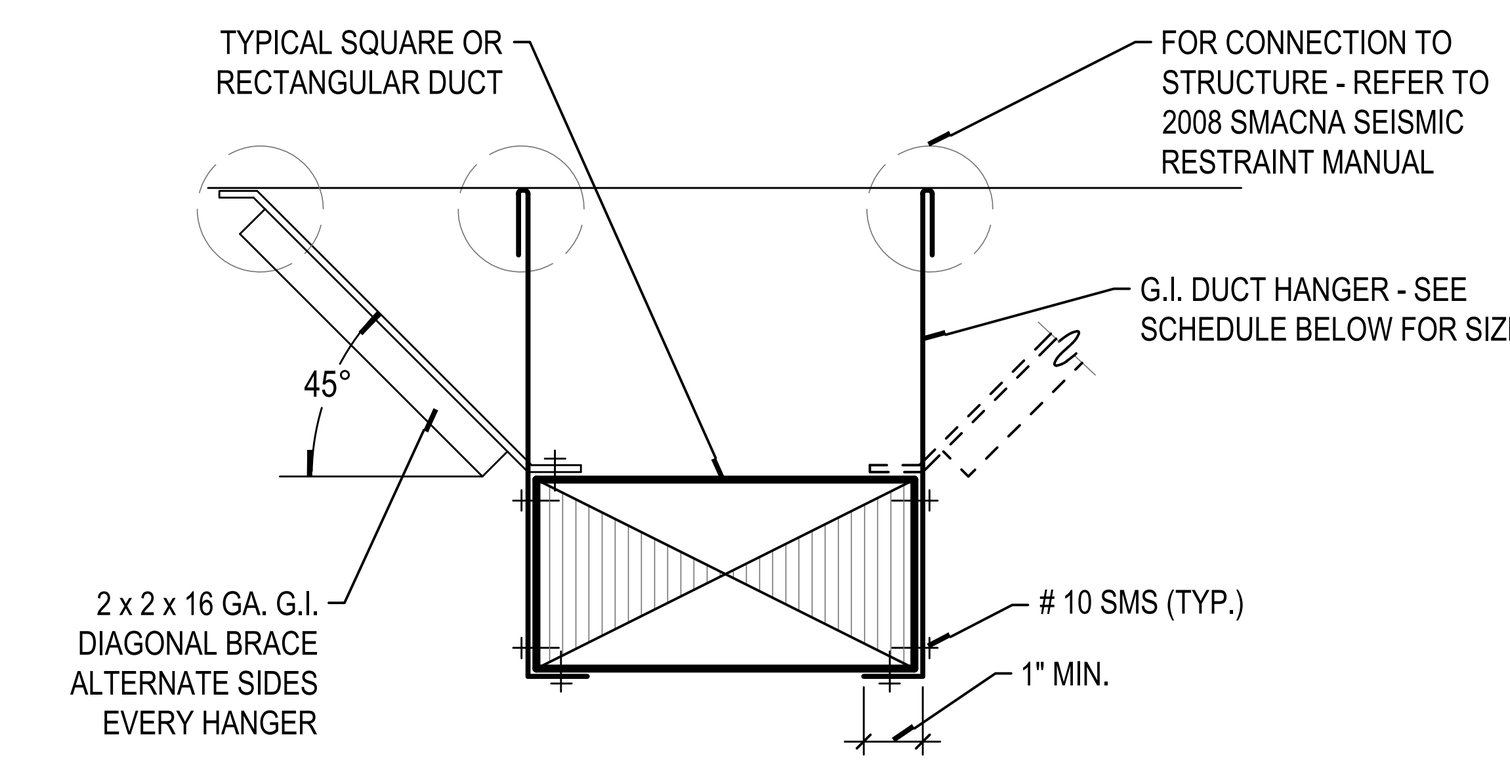

NOTE: PER 2006 SMACNA HVAC DUCT CONSTRUCTION STANDARDS AND 2019 CMC SECTION 602 & 603

HORIZONTAL	HANGER STRAP SCHEDULE		
DUCT SIZE	HANGER SIZE	MAX. SPACING	MATERIAL
UP THRU 18"	1" x 18 GA.	10'-0" O/C	G.I. STEEL
19" TO 30"	1" x 18 GA.	10'-0" O/C	G.I. STEEL
31" TO 48"	1" x 1/8"	10'-0" O/C	G.I. STEEL
VERTICAL			
DUCT SIZE	HANGER SIZE	MAX. SPACING	MATERIAL
UP THRU 24"	1" x 1/8" STRAP	12'-0" O/C	G.I. STEEL
25" TO 36"	1" x 1" x 1/8" ANGLE	12'-0" O/C	G.I. STEEL
37" TO 48"	1-1/8" x 1-1/8" x 1/8" ANGLE	12'-0" O/C	G.I. STEEL

DUCT SUPPORT - RECTANGULAR 2

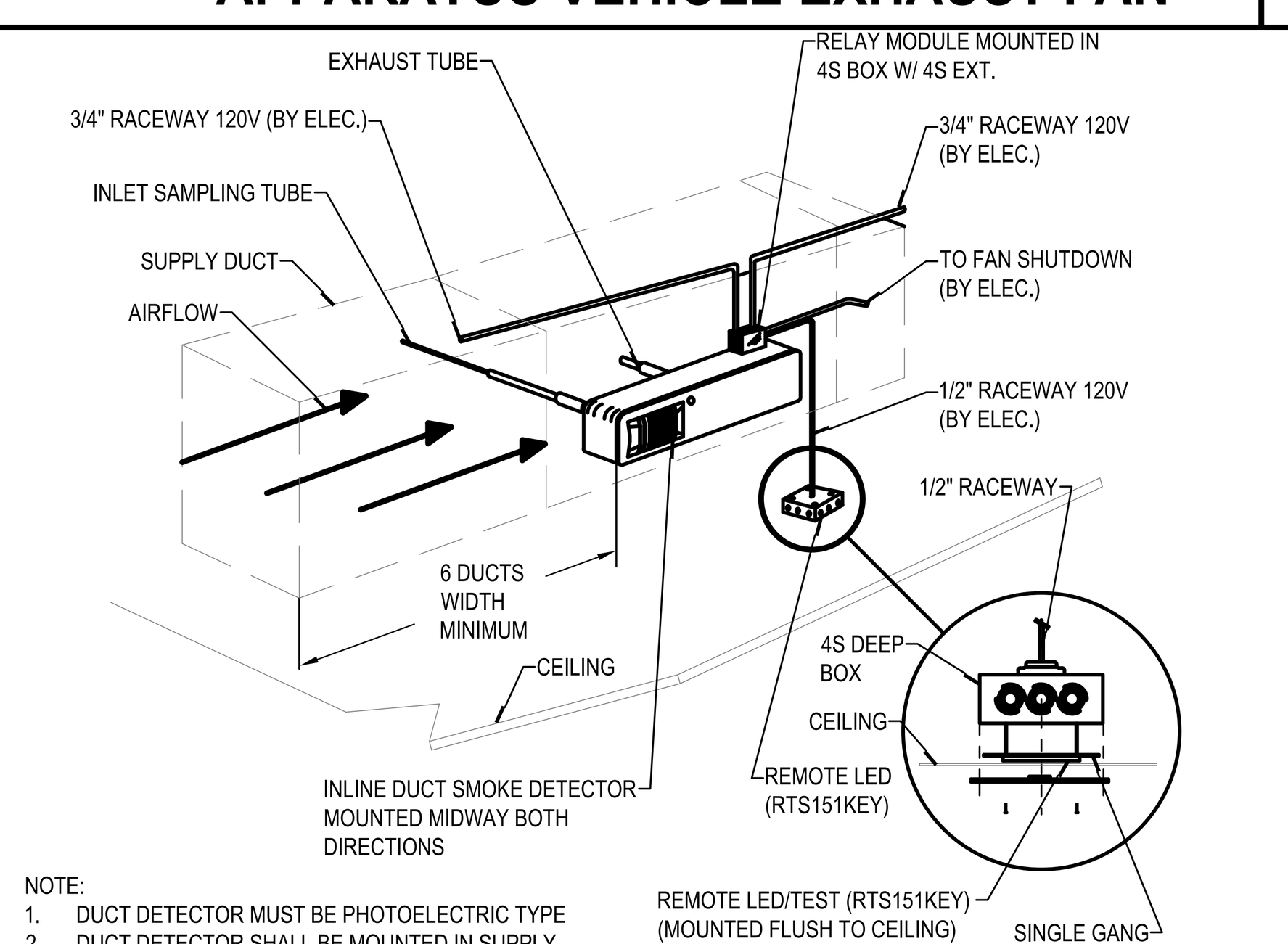

NOTE:
1. DUCT DETECTOR MUST BE PHOTOELECTRIC TYPE
2. DUCT DETECTOR SHALL BE MOUNTED IN SUPPLY DUCT PRIOR TO AN TRANSITIONS OR TURNS
3. DUCT DETECTOR IS SYSTEM SENSOR INNOVAIR D4120 AIR VELOCITY 100 TO 4000 FPM CSFM LISTING # 3242-1653:0207
4. WHERE DUCT SMOKE DETECTORS ARE NOT RE-SETTABLE FROM THE PROTECTED FIRE ALARM SYSTEM, A LISTED ALARM/SUPERVISORY INDICATOR WITH IN INTEGRAL RESET SWITCH SHALL BE PROVIDED IN AN ACCESSIBLE LOCATION

DUCT DETECTOR MOUNTING 15

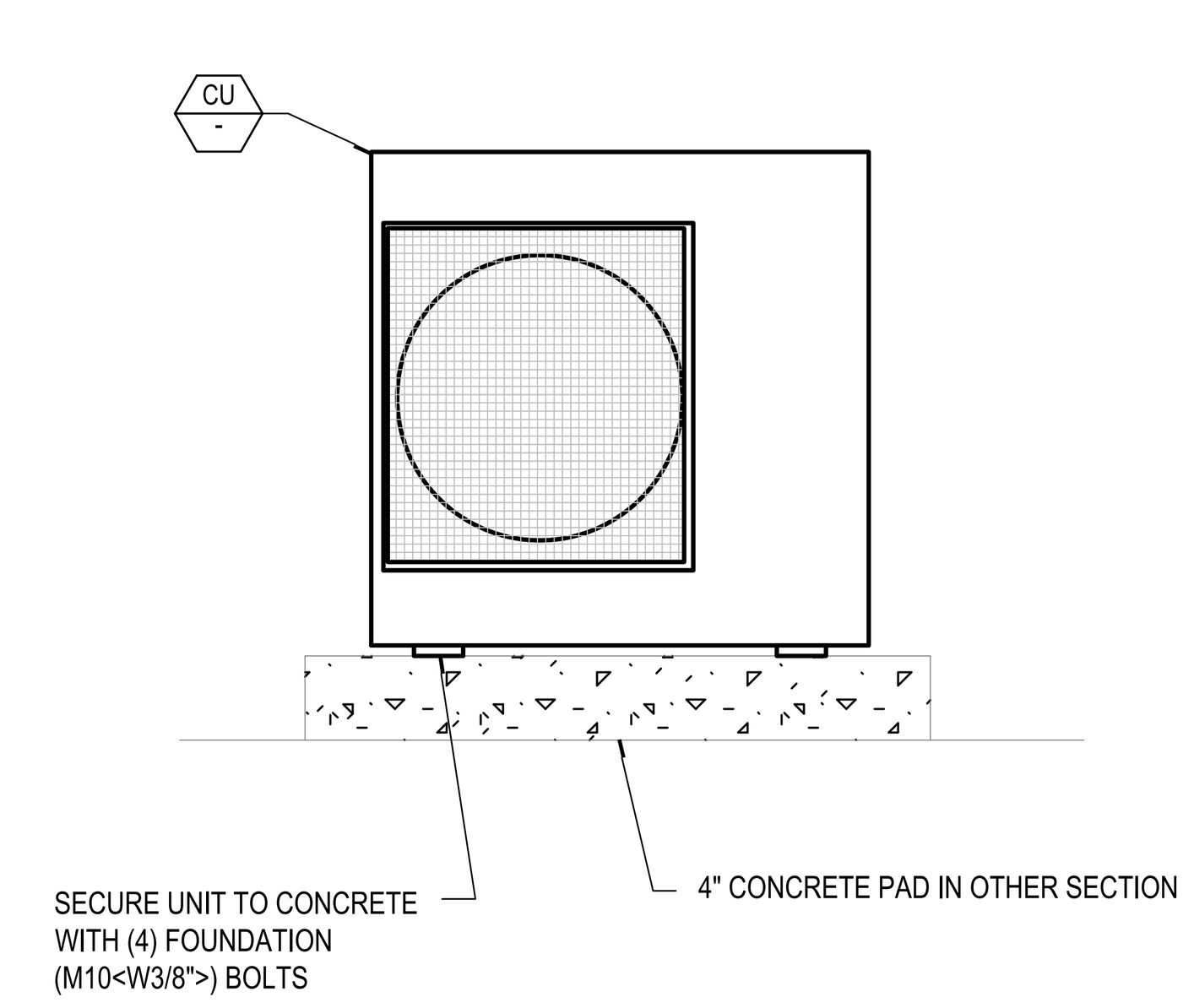

CONDENSING UNIT MOUNTING 11

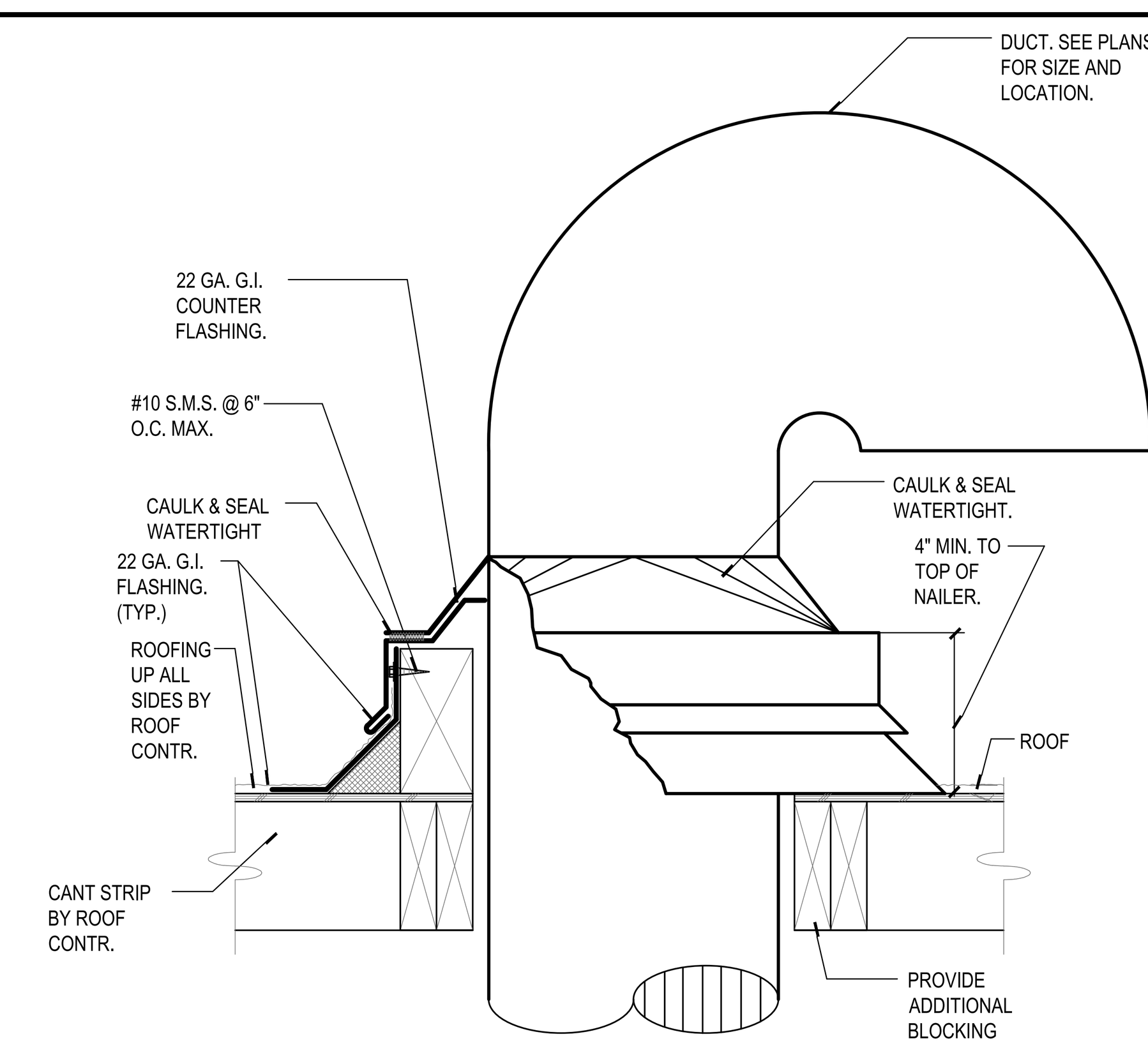

DUCT THROUGH ROOF 7

RECTANGULAR			
DUCT SIZE	GAUGE	TRANSVERSE JOINT	BRACING
UP TO 12"	26	DD, SS	NONE
13" TO 18"	24	DD, SS	NONE
19" TO 30"	24	DD, SS	NONE
31" TO 42"	22	1" PS OR BS	1x1x1-1/8
43" TO 54"	22	1-1/2" STANDING SEAM	1.5x1.5
ROUND			
DUCT SIZE	GAUGE	TRANSVERSE JOINT	BRACING
UP TO 9"	28	2" SLIP	NONE
10" TO 14"	28	4" SLIP	NONE
14" TO 18"	26	4" SLIP	NONE
18" TO 24"	24	4" SLIP	1x1x1-1/8

NOTE:
1. PER SMACNA-2020 HVAC DUCT CONSTRUCTION STANDARDS METAL AND FLEXIBLE, 3RD EDITION AND 2022 CMC .
2. LOW PRESSURE DUCT CONSTRUCTION: GAUGES, TRANSVERSE JOINTS, SPACING OF JOINTS AND INTERMEDIATE BRACING SHALL BE AS TABULATED ABOVE, IN WHICH TRANSVERSE JOINTS ARE SHOWN SS FOR S-STOP, DS FOR DRIVE SLIP, PS FOR POCKET SLIP, AND BS FOR BAR SLIP, PS AND BS LAPPED AND RIVETED AT CORNERS. INTERMEDIATE BRACING WHERE SHOWN MAY BE OMITTED IF DUCT SECTIONS OF FOUR FEET (4'-0") OR LESS ARE USED. MAXIMUM SPACING OF BRACING - FOUR FEET (4'-0")

DUCT GAUGE SCHEDULE 3

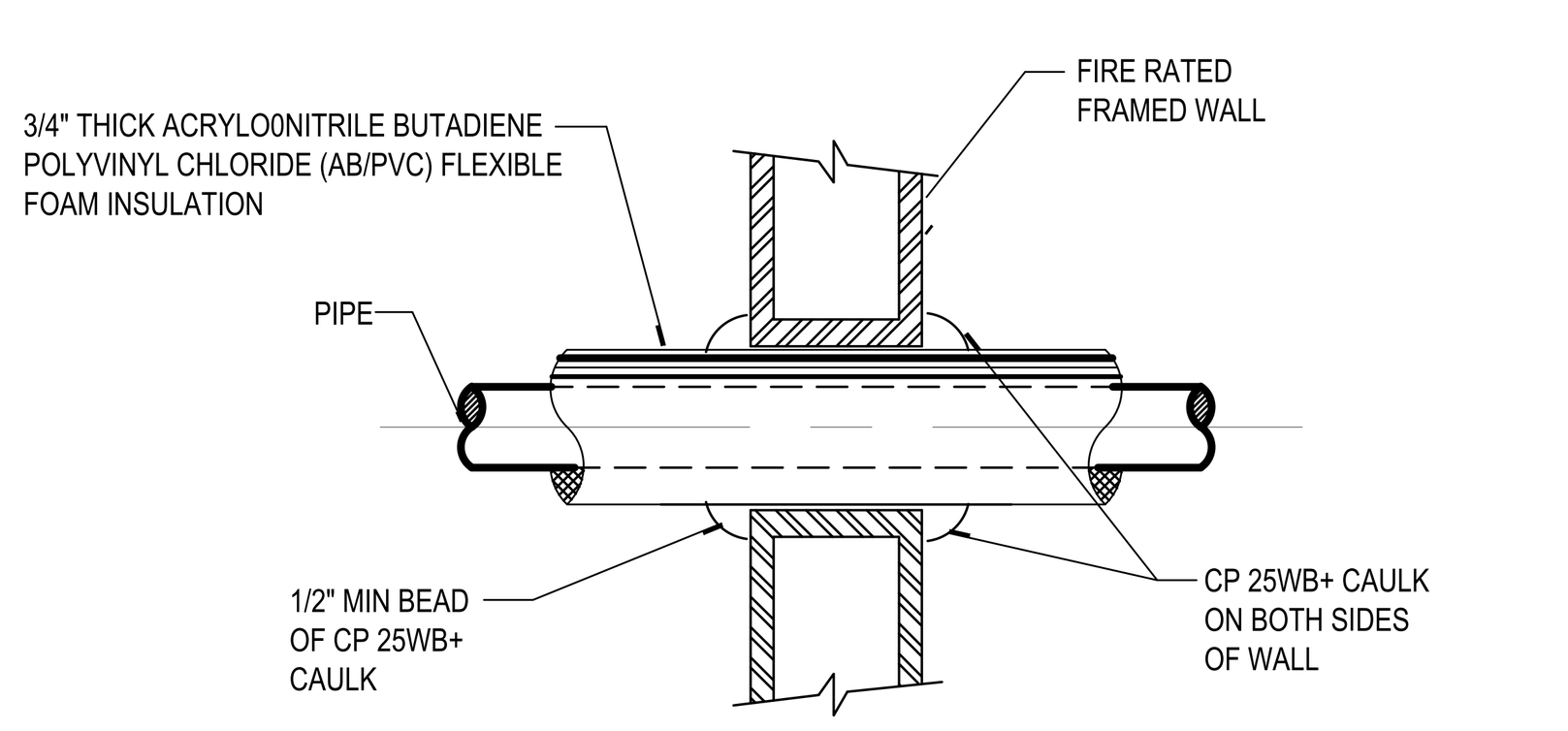

SPECIFICATIONS:

PENETRATIONS IN FIRE RESTRICTIVE WALLS, PARTITIONS AND FLOORS WHERE PROTECTED OPENINGS ARE REQUIRED SHALL BE FIRE STOPPED USING APPROVED MATERIALS, SUCURELY INSTALLED AND CAPABLE OF MAINTAINING THIER INTREGRITY AND PREVENTING THE MOVEMENT OF FLAMES AND/OR GASES THROUGH THE VOID SPACES BETWEEN PENETRATING MATERIALS AND WALLS, PARTITIONS AND FLOORS WHEN TESTED IN ACCORDANCE WITH ASTM STANDARD E-814 OR UL STANDARD 1479 (UBC SECTIONS 4304(e), 4305(a) & 4305(b)).

PROVIDE DESIGN DETAILS ON DRAWINGS DEPICTING APPROVED (LISTED) METHODS AND MATERIALS USED TO PROTECT PENETRATINGS WALLS, PARTITIONS AND FLOORS.

DESIGNS ARE LISTED BY UNDERWRITER'S LABORATORIES (FIRE RESISTANCE DIRECTORY) AND THE CALIFORNIA STATE FIRE MARSHALL (BUILDING MATERIAL LISTINGS). SPECIFIC DESIGN INFORMATION IS AVAILABLE FROM U.L. CSFM OR THE PRODUCT MANUFACTURER.

NOTES:

3M FIRE BARRIER PRODUCTS: CP 25WB+ CALIFORNIA STATE FIRE MARSHALL LISTING No. 4485-941:100

INSULATED PIPE:
U.L. DESIGN No. W-L-5040 (1-HOUR STUD WALL)
U.L. DESIGN No. W-L-5040 (2-HOUR STUD WALL)

PIPE THRU RATED WALL 16

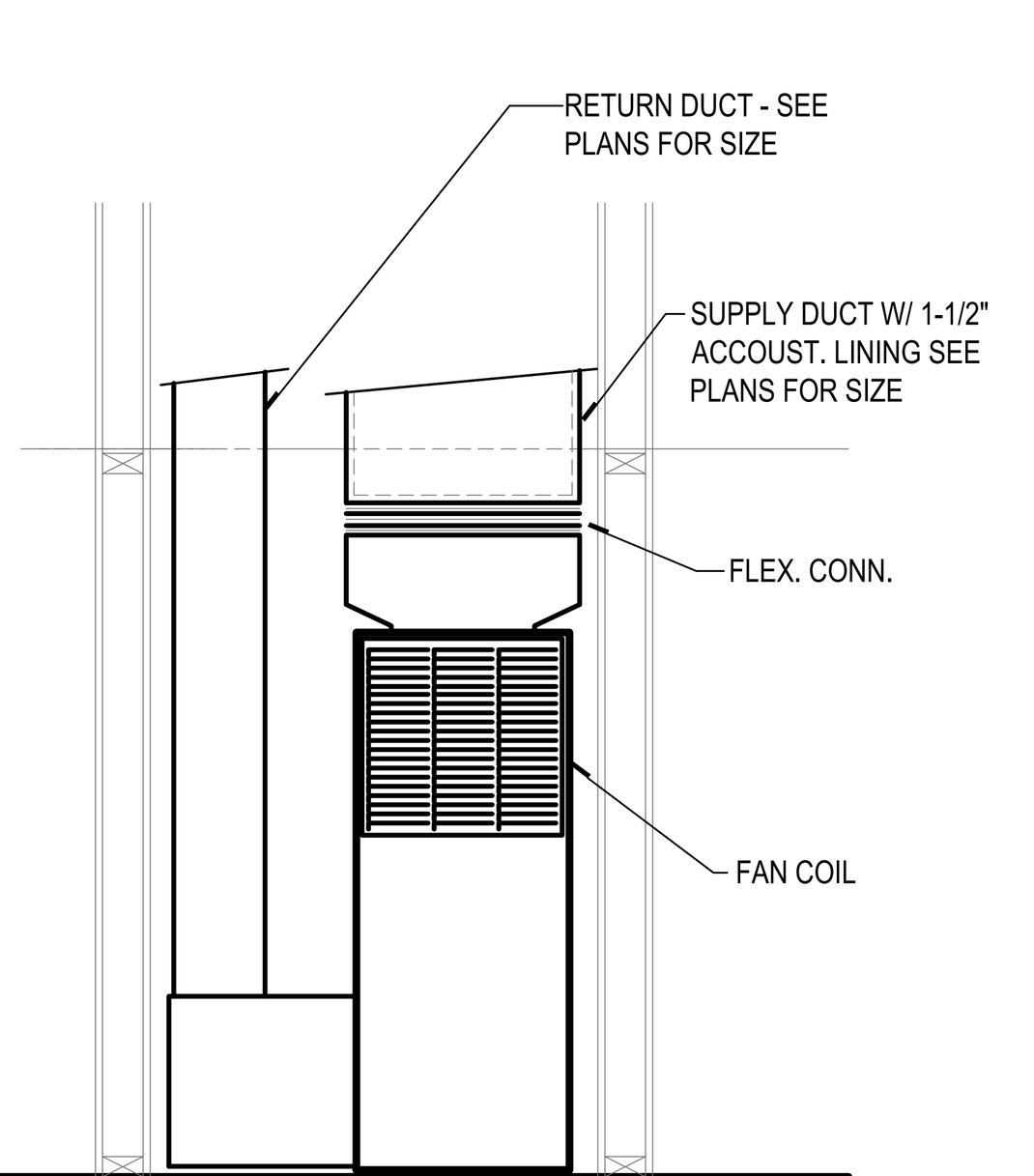

FAN COIL MOUNTING 12

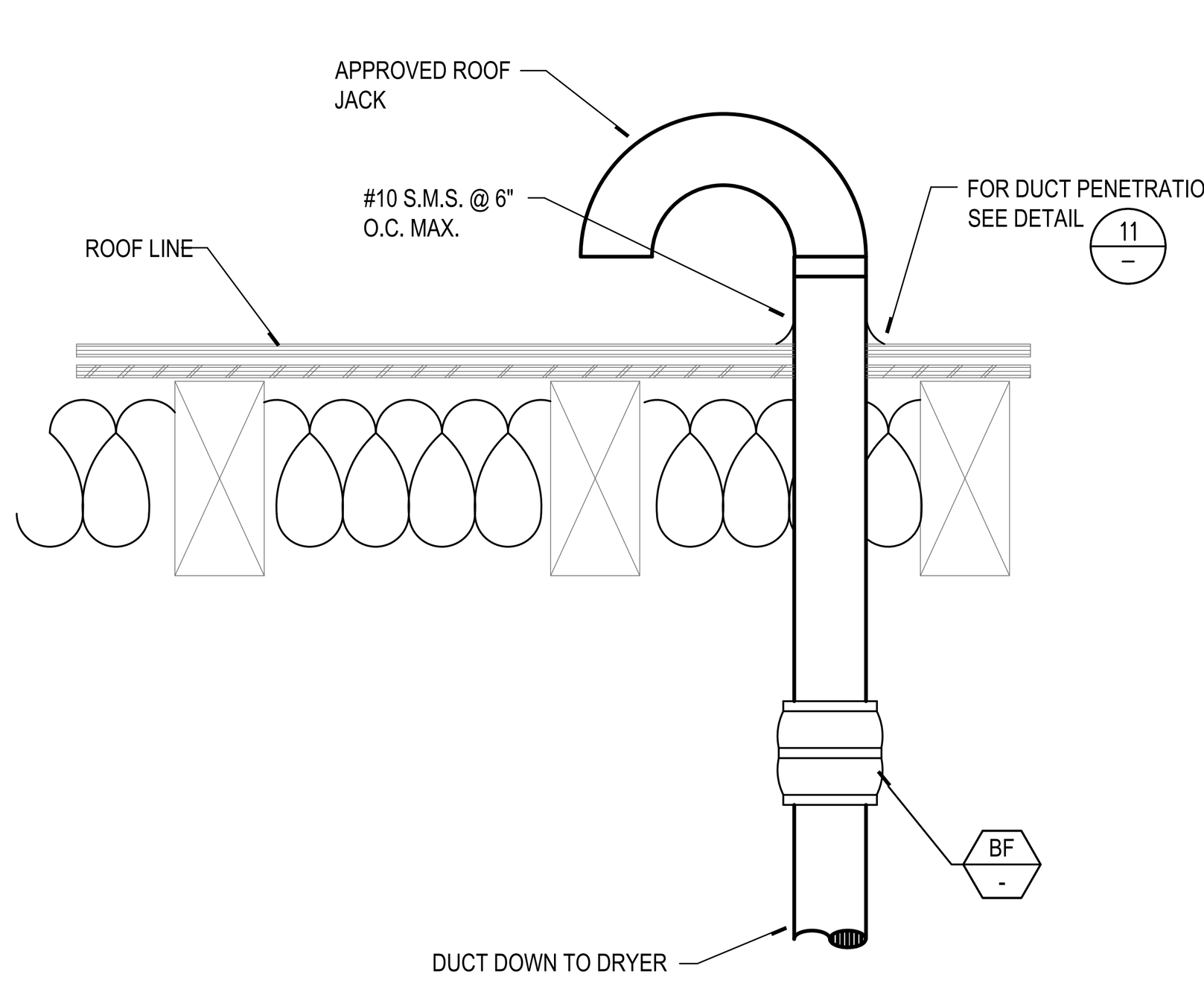

DRYER FAN MOUNTING 8

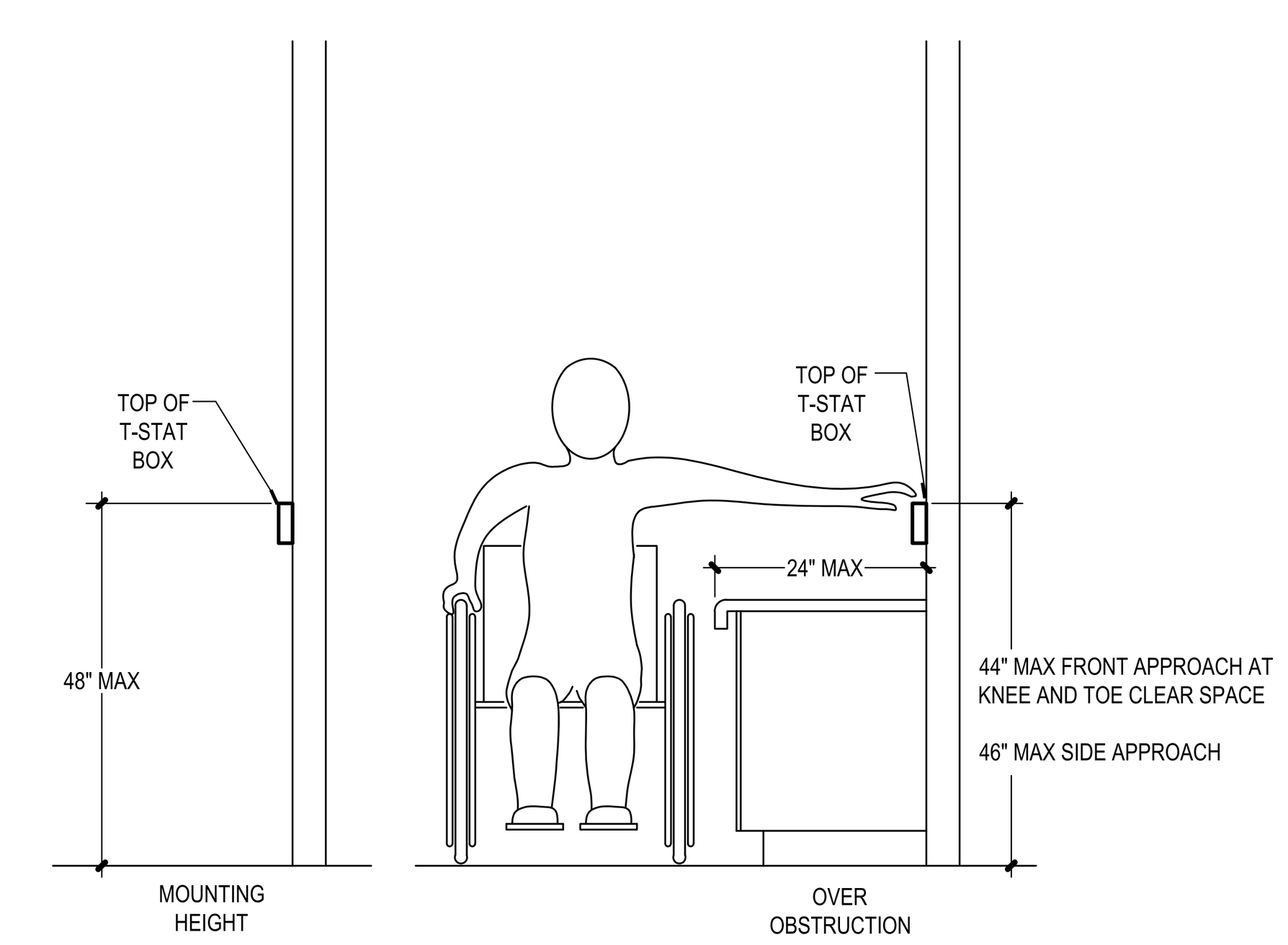

NOTE:
PROVIDE A 30"W x 27"H x 19"D MIN. TOE/KNEE CLEARANCE FOR FRONT APPROACH OVER OBSTRUCTION.

THERMOSTAT MOUNTING 4

STK ARCHITECTURE, INC.
42095 ZEVO DR., TEMECULA, CALIFORNIA 92590-3780
Phone: 951.296.9110 Fax: 951.296.6079 Email: stk@stkinc.com

CONSULTANT:

REVIEWED FOR CODE COMPLIANCE
BUILDING BUREAU SOLUTIONS INC.

DESIGN WEST ENGINEERING
MECHANICAL • ELECTRICAL • ENERGY CONSULTANTS
Email: codes@designwesteng.com

REGISTERED PROFESSIONAL ENGINEER STEVEN M. JOHNSON No. 33209 SIGNED:04/15/2026 MECHANICAL STATE OF CALIFORNIA

PROJECT ADMINISTERED BY:
CITY OF PERRIS

101 NORTH "D" STREET
PERRIS, CA 92570

PROJECT NAME:
SOUTH FIRE STATION AND ADMINISTRATIVE BUILDING

PROJECT CIP: F077

2495 MURRIETA ROAD
PERRIS, CA 92585

ISSUE INFORMATION:

DATE:	INFORMATION:
11-26-25	95% CD SUBMITTAL
02-05-26	1 1st PC RESPONSE
02-19-26	2 2nd PC RESPONSE

SHEET INFORMATION:
STK PROJECT NO.: 365-03-25
SCALE: AS NOTED
DATE: NOVEMBER 2025
PLOT DATE: –
DRAWN BY: JG / JW

SEAL:

SHEET TITLE:
MECHANICAL DETAILS

SHEET NO.:
M4.1

25-114

SAMSUNG DVM Pro 2.0

Piping (Continued)

System (CU-1A) (Continued)

Piping Diagram

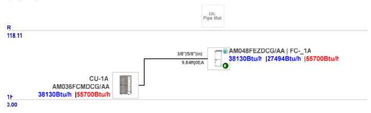

* Capacity Correction (VRF Only) based on Simultaneous Operating

-The above system configuration may differ from The actual installation conditions.
Please refer to The installation manual for full details.

PIPING DIAGRAM | **14**

SAMSUNG DVM Pro 2.0

Piping (Continued)

System (CU12RR) (Continued)

Piping Diagram

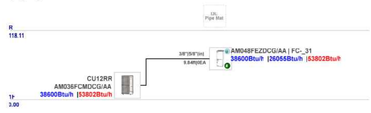

* Capacity Correction (VRF Only) based on Simultaneous Operating

-The above system configuration may differ from The actual installation conditions.
Please refer to The installation manual for full details.

PIPING DIAGRAM | **10**

SAMSUNG DVM Pro 2.0

Piping (Continued)

System (CU 1-10) (Continued)

Piping Diagram

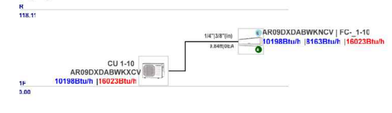

-The above system configuration may differ from The actual installation conditions.
Please refer to The installation manual for full details.

PIPING DIAGRAM | **6**

INTERLOCKED UNIT SCHEDULE
CU-1 & FC-1
CU-2 & FC-2
CU-3 & FC-3
CU-4 & FC-4
CU-5 & FC-5
CU-6 & FC-6
CU-7 & FC-7
CU-8 & FC-8
CU-9 & FC-9
CU-10 & FC-10

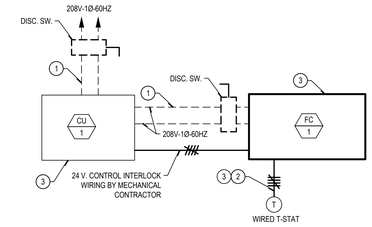

WIRING DIAGRAM - SPLIT SYSTEM | **1**

UNIT SCHEDULE
CU-11 & FC-11
CU-12 & FC-12
CU-13 & FC-13
CU-1A & FC-1A
CU-4A & FC-4A
CU-5A & FC-5A
-

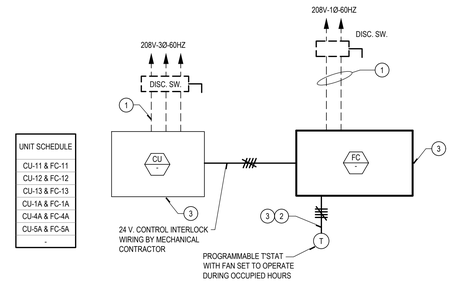

WIRING DIAGRAM - SPLIT SYSTEM | **2**

SAMSUNG DVM Pro 2.0

Piping (Continued)

System (CU-2A) (Continued)

Piping Diagram

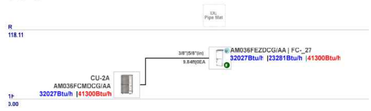

* Capacity Correction (VRF Only) based on Simultaneous Operating

-The above system configuration may differ from The actual installation conditions.
Please refer to The installation manual for full details.

PIPING DIAGRAM | **16**

SAMSUNG DVM Pro 2.0

Piping (Continued)

System (CU-13rr) (Continued)

Piping Diagram

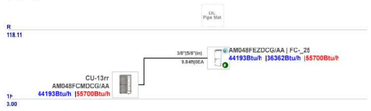

* Capacity Correction (VRF Only) based on Simultaneous Operating

-The above system configuration may differ from The actual installation conditions.
Please refer to The installation manual for full details.

PIPING DIAGRAM | **12**

SAMSUNG DVM Pro 2.0

Piping (Continued)

System (CU-11) (Continued)

Piping Diagram

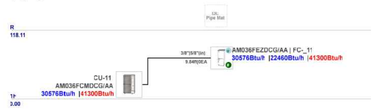

* Capacity Correction (VRF Only) based on Simultaneous Operating

-The above system configuration may differ from The actual installation conditions.
Please refer to The installation manual for full details.

PIPING DIAGRAM | **8**

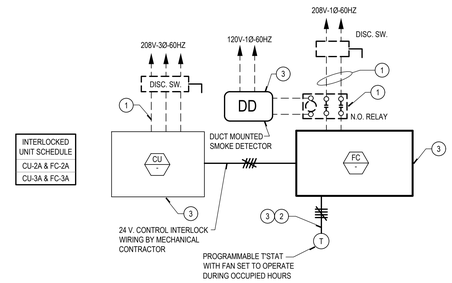

WIRING DIAGRAM - SPLIT SYSTEM W/ DUCT DETECTOR | **3**

1. ALL WIRING AND EQUIPMENT SHOWN DASHED SHALL BE FURNISHED AND INSTALLED BY THE ELECTRICAL CONTRACTOR.
2. ALL LOW-VOLTAGE WIRING FOR TEMPERATURE CONTROLS SHALL BE FURNISHED AND INSTALLED BY THE CONTROLS CONTRACTOR. IF THERE IS NO SEPARATE CONTROLS CONTRACT, CONDUIT FOR LOW-VOLTAGE WIRING SHALL BE FURNISHED AND INSTALLED BY THE ELECTRICAL CONTRACTOR AND ALL LOW-VOLTAGE WIRING SHALL BE INSTALLED BY MECHANICAL CONTRACTOR.
3. ALL EQUIPMENT NOT SHOWN DASHED SHALL BE FURNISHED AND INSTALLED BY THE MECHANICAL CONTRACTOR.

WRNG-NOTES-01 | **4**

STK ARCHITECTURE, INC.
42095 ZEVO DR., TEMECULA, CALIFORNIA 92590-3780
Phone: 951.296.9110 Fax: 951.296.6079 Email: stk@stkinc.com

CONSULTANT:

REVIEWED FOR CODE COMPLIANCE

THESE DRAWING AND DOCUMENTS SHALL BE RETAINED HELD AND FOUND TO BE IN THE EXCLUSIVE PROPERTY OF DESIGN WEST ENGINEERING AND SHALL NOT BE USED IN WHOLE OR IN PART FOR ANY WORK BY ANY CONTRACTOR, SUBCONTRACTOR, SUPPLIER OR MANUFACTURER WITHOUT THE WRITTEN PERMISSION OF DESIGN WEST ENGINEERING. ANY USE OF THESE DRAWINGS AND DOCUMENTS WITHOUT SUCH PERMISSION SHALL BE UNLAWFUL AND WILL BE SUBJECT TO LEGAL ACTION. CONTRACTOR SHALL VERIFY AND BE RESPONSIBLE FOR ALL DIMENSIONS AND CONDITIONS ON THE JOB. DESIGN WEST ENGINEERING SHALL BE NOTIFIED OF ANY VARIATION THAT MAY AFFECT THE DESIGN INTENT BEFORE PROCEEDING WITH THE WORK. DO NOT SCALE DRAWINGS. CONTRACTOR SHALL REPORT ANY ERRORS, OMISSIONS OR INCONSISTENCIES IN THE CONSTRUCTION DOCUMENTS TO DESIGN WEST ENGINEERING FOR CLARIFICATION BEFORE PROCEEDING WITH THE WORK. CONTRACTOR SHALL VERIFY AND BE RESPONSIBLE FOR ALL DIMENSIONS AND CONDITIONS ON THE JOB. DESIGN WEST ENGINEERING SHALL BE NOTIFIED OF ANY VARIATION THAT MAY AFFECT THE DESIGN INTENT BEFORE PROCEEDING WITH THE WORK. DO NOT SCALE DRAWINGS. CONTRACTOR SHALL REPORT ANY ERRORS, OMISSIONS OR INCONSISTENCIES IN THE CONSTRUCTION DOCUMENTS TO DESIGN WEST ENGINEERING FOR CLARIFICATION BEFORE PROCEEDING WITH THE WORK.

DESIGN WEST ENGINEERING
MECHANICAL / ELECTRICAL / ENERGY CONSULTANTS
EUREKA, BERKELEY & SOLUTIONS INC.

REGISTERED PROFESSIONAL ENGINEER
No. 33209
SIGNED:04/15/2026
MECHANICAL
STATE OF CALIFORNIA

PROJECT ADMINISTERED BY:
CITY OF PERRIS

101 NORTH "D" STREET
PERRIS, CA 92570

PROJECT NAME:
SOUTH FIRE STATION AND ADMINISTRATIVE BUILDING

PROJECT CIP: F077

2495 MURRIETA ROAD
PERRIS, CA 92585

ISSUE INFORMATION:

DATE:	INFORMATION:
11-26-25	95% CD SUBMITTAL
02-05-26	1st PC RESPONSE
02-19-26	2nd PC RESPONSE

SHEET INFORMATION:

STK PROJECT NO.: 365-03-25
SCALE: AS NOTED
DATE: NOVEMBER 2025
PLOT DATE: -
DRAWN BY: JG / JW

SEAL:

SHEET TITLE:
MECHANICAL DETAILS CONT.

SHEET NO.:
M4.2

R:\PROJECTS\2025\25-114 Home Fire Station_CAD\25-114 M Details.dwg
4/14/2026 4:47PM

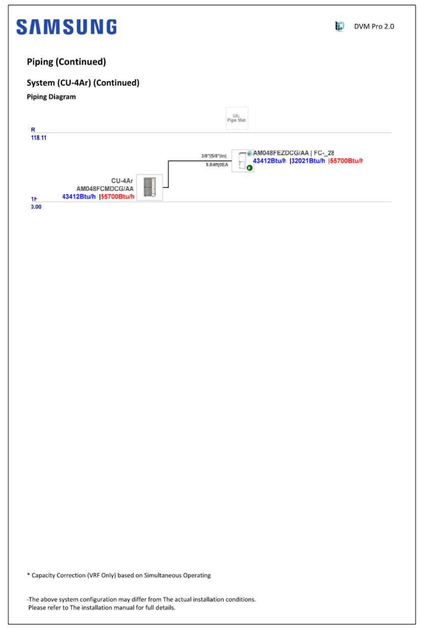

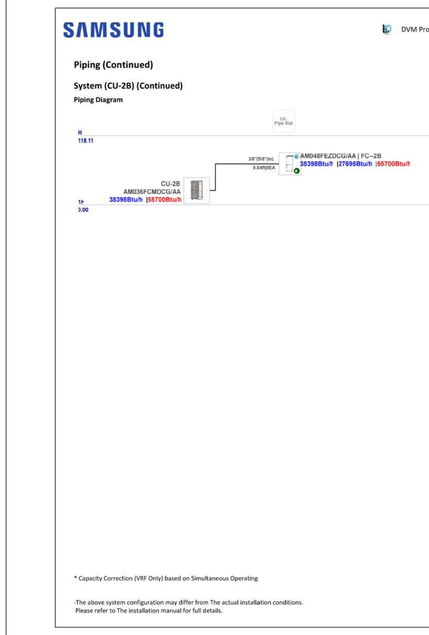

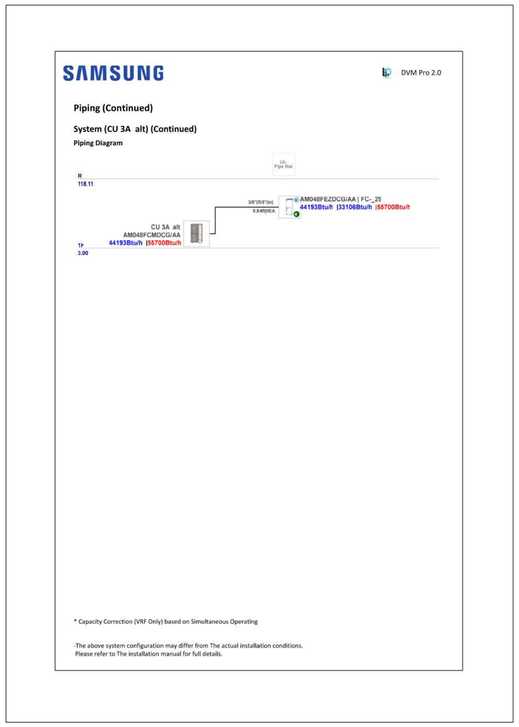

-	7	-	5	PIPING DIAGRAM	3	PIPING DIAGRAM	1
-	8	-	6	-	4	PIPING DIAGRAM	2

STK
42095 ZEVO DR., TEMECULA, CALIFORNIA 92590-3780
Phone: 951.296.9110 Fax: 951.296.6079 Email: stk@stknc.com

CONSULTANT:

REVIEWED FOR CODE COMPLIANCE

DESIGN WEST ENGINEERING
MECHANICAL • ELECTRICAL • ENERGY CONSULTANTS
BUILDING BUREAU SOLUTIONS INC.

REGISTERED PROFESSIONAL ENGINEER
No. 33209
SIGNED 04/15/2026
MECHANICAL
STATE OF CALIFORNIA

PROJECT ADMINISTERED BY:
CITY OF PERRIS

101 NORTH "D" STREET
PERRIS, CA 92570

PROJECT NAME:
SOUTH FIRE STATION AND ADMINISTRATIVE BUILDING

PROJECT CIP: F077

2495 MURRIETA ROAD
PERRIS, CA 92585

ISSUE INFORMATION:

DATE:	INFORMATION:
11-26-25	95% CD SUBMITTAL
02-05-26	1st PC RESPONSE
02-19-26	2nd PC RESPONSE

SHEET INFORMATION:

STK PROJECT NO.: 365-03-25
SCALE: AS NOTED
DATE: NOVEMBER 2025
PLOT DATE: –
DRAWN BY: JG / JW

SEAL:

SHEET TITLE:
MECHANICAL DETAILS CONT.

SHEET NO.:
M4.3

25-114

STATE OF CALIFORNIA
Envelope Component Approach
CALIFORNIA ENERGY COMMISSION

CERTIFICATE OF COMPLIANCE		NRCC-ENV-E
Project Name: Perris Fire Station	Report Page:	(Page 3 of 34)
	Date Prepared:	11/26/2025

F. ROOF ASSEMBLY SCHEDULE

Framed Roof Assemblies

Tag/Plan Detail ID	Name/Description	Status	Exception to Roof Insulation Requirements in §141.0(b)2Biii (Alts. Only)	Occupancy Type
R-38 Roof Attic No Insulation	Roof	New		Hotel/ Motel
R-38 Roof Attic No Insulation	Roof	New		Hotel/ Motel
R-38 Roof Attic No Insulation	Roof	New		Hotel/ Motel
R-38 Roof Attic No Insulation	Roof	New		Hotel/ Motel
R-38 Roof Attic No Insulation	Roof	New		Hotel/ Motel
R-38 Roof Attic No Insulation	Roof	New		Hotel/ Motel
R-38 Roof Attic No Insulation	Roof	New		Hotel/ Motel
R-38 Roof Attic No Insulation	Roof	New		Hotel/ Motel
R-38 Roof Attic No Insulation	Roof	New		Hotel/ Motel
R-38 Roof Attic No Insulation	Roof	New		Hotel/ Motel
R-38 Roof Attic No Insulation	Roof	New		Nonresidential/ Relocatable 1 C
R-38 Roof Attic No Insulation	Roof	New		Nonresidential/ Relocatable 1 C
R-38 Roof Attic No Insulation	Roof	New		Nonresidential/ Relocatable 1 C
R-38 Roof Attic No Insulation	Roof	New		Nonresidential/ Relocatable 1 C

STATE OF CALIFORNIA
Envelope Component Approach
CALIFORNIA ENERGY COMMISSION

CERTIFICATE OF COMPLIANCE		NRCC-ENV-E
Project Name: Perris Fire Station	Report Page:	(Page 2 of 34)
	Date Prepared:	11/26/2025

B. PROJECT SCOPE

[1]*FOOTNOTE: Doors that are more than 25% glass in area are considered Glazed Doors and should be documented on table K with fenestration.*
[2]*Roof recovers and replacements must also check "Roof Assembly" box and document compliance with insulation requirements in Table F. Roof recoats may document compliance with roof material only in Table G.*

C. COMPLIANCE RESULTS

Results in this table are automatically calculated from data input and calculations in Tables F through L. Note: If any cell on this table says "COMPLIES with Exceptional Conditions" refer to Table D. Exceptional Conditions for guidance or see the applicable table referenced below.

Opaque Envelope Components					Fenestration	Daylighting Spaces > 5,000ft²	Compliance Results
Roof Assembly	Roofing Materials	Walls	Floors	Doors			
01	02	03	04	05	06	07	08
(See Table F)	(See Table G)	(See Table H)	(See Table I)	(See Table J)	(See Table K)	(See Table L)	COMPLIES
Yes	Yes	Yes		Yes	Yes		

D. EXCEPTIONAL CONDITIONS

This table is auto-filled with uneditable comments because of selections made or data entered in tables throughout the form.

E. ADDITIONAL REMARKS

This table includes remarks made by the permit applicant to the Authority Having Jurisdiction.

F. ROOF ASSEMBLY SCHEDULE

This table demonstrates compliance for prescriptive roof assembly requirements in 140.3(a)1B/ 170.2(a)1B for new construction, 141.0(a)/ 180.1 for additions, or 141.0(b)2Biii/ 180.2 for alterations,

01	Indicate roof types included in the project:	☒ Framed	☐ Framed-Multifamily	☐ SIPS	☐ Span Deck & Concrete	☐ Metal Panels	☐ Metal Building

Framed Roof Assemblies

01	☒	Include Framed Roof Assemblies in Area-Weighted Average U-factor Calculation[1]	
02	03	04	05	06

STATE OF CALIFORNIA
Envelope Component Approach
CALIFORNIA ENERGY COMMISSION

CERTIFICATE OF COMPLIANCE NRCC-ENV-E

This document is used to demonstrate compliance with mandatory requirements in 110.8(g) and 120.7(b)/ 160.1 for newly constructed nonresidential, hotel/ motel, multifamily and mixed-use buildings, and 141.0(b)1/ 180.2 for alterations, related to roof, wall and floor assemblies. It is also used to demonstrate compliance with prescriptive requirements in 140.3/ 170.2 for newly constructed buildings, and 141.0/ 180.1/ 180.2 for additions and alterations, related to roof, wall, floor, door, fenestration and daylighting requirements.

Project Name: Perris Fire Station	Report Page:	(Page 1 of 34)
Project Address: 101 North D Street	Date Prepared:	11/26/2025

A. GENERAL INFORMATION

01	Project Location (city)	Perris	05	# of Stories (Habitable Above Grade)	1
02	Zipcode	92570	06	Total Conditioned Floor Area (ft^2)	9844
03	Climate Zone	10	07	Total Unconditioned Floor Area (ft^2)	5842
04	Occupancy Types Within Project: (select all that apply): If one occupancy constitutes >= 80% of the conditioned floor area, the entire building envelope may be designed to comply with the provisions of that occupancy per 100.0(f).		08	☐ Project includes unconditioned enclosed space(s) > 5,000 ft^2 under a roof with a ceiling height of at least 15 ft.[1]	

• Gymnasium • Hotel/Motel • Office • Parking Garage • Support Areas

[1] *FOOTNOTE: Enclosed spaces > 5,000 ft^2 directly under roof with ceiling height > 15 ft in climate zones 2 through 15 are required to meet the minimum daylighting requirements defined in 140.3(c)/ 170.2(b). Compliance with 140.3(c)/ 170.2(b) is documented in Table L. This is the only prescriptive requirement which applies to unconditioned spaces.*

B. PROJECT SCOPE

This table specifies project envelope components within the permit application demonstrating compliance using the prescriptive paths outlined in 140.3/ 170.2 and 141.0(a)1/ 180.1 and 141.0(b)1 and 2/ 180.2 for additions and alterations.

My project consists of (check all that apply) 01	Component Types 02		
☒ New Construction or Newly Conditioned Space	☒ Roof	☒ Walls	☒ Exterior Opaque Doors
☐ One or more enclosed spaces > 5,000 ft^2 directly under roof with ceiling height > 15ft		☐ Floors	☒ Fenestration/ Glazed Doors[1]
☐ Addition of conditioned space	☐ Roof	☐ Walls	☐ Exterior Opaque Doors
☐ One or more enclosed spaces > 5,000 ft^2 directly under roof with ceiling height > 15ft			
☐ Addition is <=700 ft^2		☐ Floors	☐ Fenestration/ Glazed Doors[1]
☐ Addition is >700 ft^2			
☐ Alteration of conditioned space	☐ Roof Assembly	☐ Walls	
☐ One or more enclosed spaces > 5,000 ft^2 directly under roof with ceiling height > 15ft and lighting system installed for the first time	☐ Roofing Material[2]	☐ Floors	☐ Fenestration

STATE OF CALIFORNIA
Envelope Component Approach
CALIFORNIA ENERGY COMMISSION

CERTIFICATE OF COMPLIANCE		NRCC-ENV-E
Project Name: Perris Fire Station	Report Page:	(Page 6 of 34)
	Date Prepared:	11/26/2025

F. ROOF ASSEMBLY SCHEDULE

Framed Roof Assemblies

R-38 Roof Attic No Insulation	Roof	New		Nonresidential/ Relocatable 1 CZ
R-38 Roof Attic No Insulation	Roof	New		Nonresidential/ Relocatable 1 CZ
R-38 Roof Attic No Insulation	Roof	New		Nonresidential/ Relocatable 1 CZ
R-38 Roof Attic No Insulation	Roof	New		Nonresidential/ Relocatable 1 CZ
R-38 Roof Attic No Insulation	Roof	New		Nonresidential/ Relocatable 1 CZ
R-38 Roof Attic No Insulation	Roof	New		Nonresidential/ Relocatable 1 CZ
R-38 Roof Attic No Insulation	Roof	New		Nonresidential/ Relocatable 1 CZ
R-38 Roof Attic No Insulation	Roof	New		Nonresidential/ Relocatable 1 CZ
R-38 Roof Attic No Insulation	Roof	New		Nonresidential/ Relocatable 1 CZ
R-38 Roof Attic No Insulation	Roof	New		Nonresidential/ Relocatable 1 CZ

07	08	09	10	11	12	13	14	15		16
Tag/Plan Detail ID	How Design U-factor was determined	Roof Type & Frame Material	Frame Spacing Depth	Cavity Insulation per Design[2]	Continuous Insulation per Design[2]	Thermal Performance Unit	Required Thermal Performance[3]	U-factor per Design		Net Area[4] ft^2
Roof	JA4 Tables	Wood		38	0	U-factor	0.028	per JA4 / per Software/ Other	0.026	109

STATE OF CALIFORNIA
Envelope Component Approach
CALIFORNIA ENERGY COMMISSION

CERTIFICATE OF COMPLIANCE		NRCC-ENV-E
Project Name: Perris Fire Station	Report Page:	(Page 5 of 34)
	Date Prepared:	11/26/2025

F. ROOF ASSEMBLY SCHEDULE

Framed Roof Assemblies

R-38 Roof Attic No Insulation	Roof	New		Nonresidential/ Relocatable 1 CZ
R-38 Roof Attic No Insulation	Roof	New		Nonresidential/ Relocatable 1 CZ
R-38 Roof Attic No Insulation	Roof	New		Nonresidential/ Relocatable 1 CZ
R-38 Roof Attic No Insulation	Roof	New		Nonresidential/ Relocatable 1 CZ
R-38 Roof Attic No Insulation	Roof	New		Nonresidential/ Relocatable 1 CZ
R-38 Roof Attic No Insulation	Roof	New		Nonresidential/ Relocatable 1 CZ
R-38 Roof Attic No Insulation	Roof	New		Nonresidential/ Relocatable 1 CZ
R-38 Roof Attic No Insulation	Roof	New		Nonresidential/ Relocatable 1 CZ
R-38 Roof Attic No Insulation	Roof	New		Nonresidential/ Relocatable 1 CZ
R-38 Roof Attic No Insulation	Roof	New		Nonresidential/ Relocatable 1 CZ
R-38 Roof Attic No Insulation	Roof	New		Nonresidential/ Relocatable 1 CZ
R-38 Roof Attic No Insulation	Roof	New		Nonresidential/ Relocatable 1 CZ
R-38 Roof Attic No Insulation	Roof	New		Nonresidential/ Relocatable 1 CZ
R-38 Roof Attic No Insulation	Roof	New		Nonresidential/ Relocatable 1 CZ
R-38 Roof Attic No Insulation	Roof	New		Nonresidential/ Relocatable 1 CZ

STATE OF CALIFORNIA
Envelope Component Approach
CALIFORNIA ENERGY COMMISSION

CERTIFICATE OF COMPLIANCE		NRCC-ENV-E
Project Name: Perris Fire Station	Report Page:	(Page 4 of 34)
	Date Prepared:	11/26/2025

F. ROOF ASSEMBLY SCHEDULE

Framed Roof Assemblies

R-38 Roof Attic No Insulation	Roof	New		Nonresidential/ Relocatable 1 CZ
R-38 Roof Attic No Insulation	Roof	New		Nonresidential/ Relocatable 1 CZ
R-38 Roof Attic No Insulation	Roof	New		Nonresidential/ Relocatable 1 CZ
R-38 Roof Attic No Insulation	Roof	New		Nonresidential/ Relocatable 1 CZ
R-38 Roof Attic No Insulation	Roof	New		Nonresidential/ Relocatable 1 CZ
R-38 Roof Attic No Insulation	Roof	New		Nonresidential/ Relocatable 1 CZ
R-38 Roof Attic No Insulation	Roof	New		Nonresidential/ Relocatable 1 CZ
R-38 Roof Attic No Insulation	Roof	New		Nonresidential/ Relocatable 1 CZ
R-38 Roof Attic No Insulation	Roof	New		Nonresidential/ Relocatable 1 CZ
R-38 Roof Attic No Insulation	Roof	New		Nonresidential/ Relocatable 1 CZ
R-38 Roof Attic No Insulation	Roof	New		Nonresidential/ Relocatable 1 CZ
R-38 Roof Attic No Insulation	Roof	New		Nonresidential/ Relocatable 1 CZ
R-38 Roof Attic No Insulation	Roof	New		Nonresidential/ Relocatable 1 CZ
R-38 Roof Attic No Insulation	Roof	New		Nonresidential/ Relocatable 1 CZ
R-38 Roof Attic No Insulation	Roof	New		Nonresidential/ Relocatable 1 CZ

STATE OF CALIFORNIA
Envelope Component Approach
CALIFORNIA ENERGY COMMISSION

CERTIFICATE OF COMPLIANCE		NRCC-ENV-E
Project Name: Perris Fire Station	Report Page:	(Page 9 of 34)
	Date Prepared:	11/26/2025

F. ROOF ASSEMBLY SCHEDULE

07	08	09	10	11	12	13	14	15		16
Tag/Plan Detail ID	How Design U-factor was determined	Roof Type & Frame Material	Frame Spacing Depth	Cavity Insulation per Design[2]	Continuous Insulation per Design[2]	Thermal Performance Unit	Required Thermal Performance[3]	U-factor per Design		Net Area[4] ft^2
Roof	JA4 Tables	Wood		38	0	U-factor	0.034	per JA4 / per Software/ Other	0.026	72
Roof	JA4 Tables	Wood		38	0	U-factor	0.034	per JA4 / per Software/ Other	0.026	72
Roof	JA4 Tables	Wood		38	0	U-factor	0.034	per JA4 / per Software/ Other	0.026	108
Roof	JA4 Tables	Wood		38	0	U-factor	0.034	per JA4 / per Software/ Other	0.026	108
Roof	JA4 Tables	Wood		38	0	U-factor	0.034	per JA4 / per Software/ Other	0.026	293
Roof	JA4 Tables	Wood		38	0	U-factor	0.034	per JA4 / per Software/ Other	0.026	118
Roof	JA4 Tables	Wood		38	0	U-factor	0.034	per JA4 / per Software/ Other	0.026	63
Roof	JA4 Tables	Wood		38	0	U-factor	0.034	per JA4 / per Software/ Other	0.026	68

STATE OF CALIFORNIA
Envelope Component Approach
CALIFORNIA ENERGY COMMISSION

CERTIFICATE OF COMPLIANCE		NRCC-ENV-E
Project Name: Perris Fire Station	Report Page:	(Page 8 of 34)
	Date Prepared:	11/26/2025

F. ROOF ASSEMBLY SCHEDULE

07	08	09	10	11	12	13	14	15		16
Tag/Plan Detail ID	How Design U-factor was determined	Roof Type & Frame Material	Frame Spacing Depth	Cavity Insulation per Design[2]	Continuous Insulation per Design[2]	Thermal Performance Unit	Required Thermal Performance[3]	U-factor per Design		Net Area[4] ft^2
Roof	JA4 Tables	Wood		38	0	U-factor	0.028	per JA4 / per Software/ Other	0.026	263
Roof	JA4 Tables	Wood		38	0	U-factor	0.034	per JA4 / per Software/ Other	0.026	83
Roof	JA4 Tables	Wood		38	0	U-factor	0.034	per JA4 / per Software/ Other	0.026	327
Roof	JA4 Tables	Wood		38	0	U-factor	0.034	per JA4 / per Software/ Other	0.026	63
Roof	JA4 Tables	Wood		38	0	U-factor	0.034	per JA4 / per Software/ Other	0.026	375
Roof	JA4 Tables	Wood		38	0	U-factor	0.034	per JA4 / per Software/ Other	0.026	459
Roof	JA4 Tables	Wood		38	0	U-factor	0.034	per JA4 / per Software/ Other	0.026	145
Roof	JA4 Tables	Wood		38	0	U-factor	0.034	per JA4 / per Software/ Other	0.026	82

STATE OF CALIFORNIA
Envelope Component Approach
CALIFORNIA ENERGY COMMISSION

CERTIFICATE OF COMPLIANCE		NRCC-ENV-E
Project Name: Perris Fire Station	Report Page:	(Page 7 of 34)
	Date Prepared:	11/26/2025

F. ROOF ASSEMBLY SCHEDULE

07	08	09	10	11	12	13	14	15		16
Tag/Plan Detail ID	How Design U-factor was determined	Roof Type & Frame Material	Frame Spacing Depth	Cavity Insulation per Design[2]	Continuous Insulation per Design[2]	Thermal Performance Unit	Required Thermal Performance[3]	U-factor per Design		Net Area[4] ft^2
Roof	JA4 Tables	Wood		38	0	U-factor	0.028	per JA4 / per Software/ Other	0.026	106
Roof	JA4 Tables	Wood		38	0	U-factor	0.028	per JA4 / per Software/ Other	0.026	105
Roof	JA4 Tables	Wood		38	0	U-factor	0.028	per JA4 / per Software/ Other	0.026	106
Roof	JA4 Tables	Wood		38	0	U-factor	0.028	per JA4 / per Software/ Other	0.026	105
Roof	JA4 Tables	Wood		38	0	U-factor	0.028	per JA4 / per Software/ Other	0.026	107
Roof	JA4 Tables	Wood		38	0	U-factor	0.028	per JA4 / per Software/ Other	0.026	107
Roof	JA4 Tables	Wood		38	0	U-factor	0.028	per JA4 / per Software/ Other	0.026	105
Roof	JA4 Tables	Wood		38	0	U-factor	0.028	per JA4 / per Software/ Other	0.026	111

STK ARCHITECTURE, INC.
42095 ZEVO DR., TEMECULA, CALIFORNIA 92590-3780
Phone: 951.296.9110 Fax: 951.296.6079 Email: stk@stkinc.com

CONSULTANT:

REVIEWED FOR CODE COMPLIANCE
BUILDING BUREAU SOLUTIONS INC.

Email: code@designwesteng.com
DESIGN WEST ENGINEERING
MECHANICAL • ELECTRICAL • ENERGY CONSULTANTS

REGISTERED PROFESSIONAL ENGINEER STEVEN M. JOHNSON No. 33209 SIGNED:04/15/2026 MECHANICAL STATE OF CALIFORNIA

PROJECT ADMINISTERED BY:
CITY OF PERRIS

101 NORTH "D" STREET
PERRIS, CA 92570

PROJECT NAME:
SOUTH FIRE STATION AND ADMINISTRATIVE BUILDING

PROJECT CIP: F077

2495 MURRIETA ROAD
PERRIS, CA 92585

ISSUE INFORMATION:

DATE:	INFORMATION:
11-26-25	95% CD SUBMITTAL
02-05-26	1 1st PC RESPONSE
02-19-26	2 2nd PC RESPONSE

SHEET INFORMATION:
STK PROJECT NO.: 365-03-25
SCALE: AS NOTED
DATE: NOVEMBER 2025
PLOT DATE: -
DRAWN BY: JG / JW

SEAL:

SHEET TITLE:
ENERGY COMPLIANCE DOCUMENTS

SHEET NO.:
M5.1

25-114

R:_PROJECT\2025\25-114 Perris Fire Station_CAD\25-114 M-ENV-sheets.dwg
04/14/2026 6:47PM

STATE OF CALIFORNIA
Envelope Component Approach
CALIFORNIA ENERGY COMMISSION

CERTIFICATE OF COMPLIANCE		NRCC-ENV-E
Project Name: Perris Fire Station	**Report Page:**	**(Page 12 of 34)**
	Date Prepared:	11/26/2025

F. ROOF ASSEMBLY SCHEDULE

07	08	09	10	11	12	13	14	15		16
Tag/Plan Detail ID	How Design U-factor was determined	Roof Type & Frame Material	Frame Spacing Depth	Cavity Insulation per Design[2]	Continuous Insulation per Design[2]	Thermal Performance Unit	Required Thermal Performance[3]	U-factor per Design		Net Area[4] ft²
Roof	JA4 Tables	Wood		38	0	U-factor	0.034	per JA4 per Software/ Other	0.026	76
Roof	JA4 Tables	Wood		38	0	U-factor	0.034	per JA4 per Software/ Other	0.026	422
Roof	JA4 Tables	Wood		38	0	U-factor	0.034	per JA4 per Software/ Other	0.026	96
Roof	JA4 Tables	Wood		38	0	U-factor	0.034	per JA4 per Software/ Other	0.026	96
Roof	JA4 Tables	Wood		38	0	U-factor	0.034	per JA4 per Software/ Other	0.026	91
Roof	JA4 Tables	Wood		38	0	U-factor	0.034	per JA4 per Software/ Other	0.026	100
Roof	JA4 Tables	Wood		38	0	U-factor	0.034	per JA4 per Software/ Other	0.026	68
Roof	JA4 Tables	Wood		38	0	U-factor	0.034	per JA4 per Software/ Other	0.026	144

Generated Date/Time:
Documentation Software: EnergyPro

CA Building Energy Efficiency Standards - 2022 Nonresidential Compliance
Report Version: 2022.0.000
Schema Version: rev 20220101
Compliance ID: EnergyPro-4473-1125-5279
Report Generated: 2025-11-26 09:26:48

STATE OF CALIFORNIA
Envelope Component Approach
CALIFORNIA ENERGY COMMISSION

CERTIFICATE OF COMPLIANCE		NRCC-ENV-E
Project Name: Perris Fire Station	**Report Page:**	**(Page 11 of 34)**
	Date Prepared:	11/26/2025

F. ROOF ASSEMBLY SCHEDULE

07	08	09	10	11	12	13	14	15		16
Tag/Plan Detail ID	How Design U-factor was determined	Roof Type & Frame Material	Frame Spacing Depth	Cavity Insulation per Design[2]	Continuous Insulation per Design[2]	Thermal Performance Unit	Required Thermal Performance[3]	U-factor per Design		Net Area[4] ft²
Roof	JA4 Tables	Wood		38	0	U-factor	0.034	per JA4 per Software/ Other	0.026	979
Roof	JA4 Tables	Wood		38	0	U-factor	0.034	per JA4 per Software/ Other	0.026	593
Roof	JA4 Tables	Wood		38	0	U-factor	0.034	per JA4 per Software/ Other	0.026	48
Roof	JA4 Tables	Wood		38	0	U-factor	0.034	per JA4 per Software/ Other	0.026	819
Roof	JA4 Tables	Wood		38	0	U-factor	0.034	per JA4 per Software/ Other	0.026	66
Roof	JA4 Tables	Wood		38	0	U-factor	0.034	per JA4 per Software/ Other	0.026	180
Roof	JA4 Tables	Wood		38	0	U-factor	0.034	per JA4 per Software/ Other	0.026	39
Roof	JA4 Tables	Wood		38	0	U-factor	0.034	per JA4 per Software/ Other	0.026	76

Generated Date/Time:
Documentation Software: EnergyPro

CA Building Energy Efficiency Standards - 2022 Nonresidential Compliance
Report Version: 2022.0.000
Schema Version: rev 20220101
Compliance ID: EnergyPro-4473-1125-5279
Report Generated: 2025-11-26 09:26:48

STATE OF CALIFORNIA
Envelope Component Approach
CALIFORNIA ENERGY COMMISSION

CERTIFICATE OF COMPLIANCE		NRCC-ENV-E
Project Name: Perris Fire Station	**Report Page:**	**(Page 10 of 34)**
	Date Prepared:	11/26/2025

F. ROOF ASSEMBLY SCHEDULE

07	08	09	10	11	12	13	14	15		16
Tag/Plan Detail ID	How Design U-factor was determined	Roof Type & Frame Material	Frame Spacing Depth	Cavity Insulation per Design[2]	Continuous Insulation per Design[2]	Thermal Performance Unit	Required Thermal Performance[3]	U-factor per Design		Net Area[4] ft²
Roof	JA4 Tables	Wood		38	0	U-factor	0.034	per JA4 per Software/ Other	0.026	79
Roof	JA4 Tables	Wood		38	0	U-factor	0.034	per JA4 per Software/ Other	0.026	79
Roof	JA4 Tables	Wood		38	0	U-factor	0.034	per JA4 per Software/ Other	0.026	79
Roof	JA4 Tables	Wood		38	0	U-factor	0.034	per JA4 per Software/ Other	0.026	82
Roof	JA4 Tables	Wood		38	0	U-factor	0.034	per JA4 per Software/ Other	0.026	79
Roof	JA4 Tables	Wood		38	0	U-factor	0.034	per JA4 per Software/ Other	0.026	574
Roof	JA4 Tables	Wood		38	0	U-factor	0.034	per JA4 per Software/ Other	0.026	496
Roof	JA4 Tables	Wood		38	0	U-factor	0.034	per JA4 per Software/ Other	0.026	96

Generated Date/Time:
Documentation Software: EnergyPro

CA Building Energy Efficiency Standards - 2022 Nonresidential Compliance
Report Version: 2022.0.000
Schema Version: rev 20220101
Compliance ID: EnergyPro-4473-1125-5279
Report Generated: 2025-11-26 09:26:48

STATE OF CALIFORNIA
Envelope Component Approach
CALIFORNIA ENERGY COMMISSION

CERTIFICATE OF COMPLIANCE		NRCC-ENV-E
Project Name: Perris Fire Station	**Report Page:**	**(Page 15 of 34)**
	Date Prepared:	11/26/2025

H. WALL ASSEMBLY SCHEDULE

Framed Walls

01	☐	Calculate Area-Weighted Average U-factor for Metal Framed Walls[1]
02	☒	Include Wood Framed Walls in Area-Weighted Average U-factor Calculation[1]

03	04	05	06	07	08	09	10	11	12		13
Tag/Plan Detail ID	Occupancy & Status	How Design U-factor was determined	Location/ Fire Rating	Frame Material, Spacing & Depth	Cavity Insulation per Design	Continuous Insulation per Design	Thermal Performance Unit	Required Thermal Performance	U-factor per Design		Net Area[3] ft²
East Wall 9.75x9	Hotel/Motel: New	JA4 Tables	Exterior wall	Wood 1/2" gyp 16" OC 2x6	21	4	U-factor	0.059	per JA4 per Software/ Other	0.051	71.8
South Wall 5.85x9	Hotel/Motel: New	JA4 Tables	Exterior wall	Wood 1/2" gyp 16" OC 2x6	21	4	U-factor	0.059	per JA4 per Software/ Other	0.051	52.2
East Wall 9.5x9	Hotel/Motel: New	JA4 Tables	Exterior wall	Wood 1/2" gyp 16" OC 2x6	21	4	U-factor	0.059	per JA4 per Software/ Other	0.051	69.5
East Wall 9.25x9	Hotel/Motel: New	JA4 Tables	Exterior wall	Wood 1/2" gyp 16" OC 2x6	21	4	U-factor	0.059	per JA4 per Software/ Other	0.051	67.2
East Wall 9.5x9	Hotel/Motel: New	JA4 Tables	Exterior wall	Wood 1/2" gyp 16" OC 2x6	21	4	U-factor	0.059	per JA4 per Software/ Other	0.051	69.5

Generated Date/Time:
Documentation Software: EnergyPro

CA Building Energy Efficiency Standards - 2022 Nonresidential Compliance
Report Version: 2022.0.000
Schema Version: rev 20220101
Compliance ID: EnergyPro-4473-1125-5279
Report Generated: 2025-11-26 09:26:48

STATE OF CALIFORNIA
Envelope Component Approach
CALIFORNIA ENERGY COMMISSION

CERTIFICATE OF COMPLIANCE		NRCC-ENV-E
Project Name: Perris Fire Station	**Report Page:**	**(Page 14 of 34)**
	Date Prepared:	11/26/2025

F. ROOF ASSEMBLY SCHEDULE

Area-Weighted Average U-factor Compliance Calculation for Framed/ SIPs/ Span Deck & Concrete/ Metal Panel Roofs

Framed	9692	0.033	0.026	
Total for all Roof Types:	**9692**	**0.028**	**0.026**	**COMPLIES**

G. RATED ROOFING MATERIAL (COOL ROOF)

This table demonstrates compliance with prescriptive roof material requirements in 140.3(a)1A/ 170.2(a)1A for new construction, 141.0(a)/ 180.1 for additions, and 141.0(b)2B/ 180.2 for alterations. Roof recovers and replacements must also document compliance with insulation requirements in Table F. Roof recoats may document compliance with roof material only in Table G.

01	02	03	04	05	06	07	08		09		10
Tag/Plan Detail ID	Name/ Description/ Location	Status	Occupancy Type	Roof Slope	Roof Material	Compliance Method	Required Minimum Material Performance		Designed Material Performance		U-factor / R-value of Assembly
R-38 Roof Attic No Insulation	Roof	New	Hotel/Motel	Steep slope	To Be Determined	Aged solar reflectance and thermal emittance	Reflectance	0.2	Reflectance[1]	0.63	
							Emittance	0.75	Emittance	0.75	
							SRI		SRI		
R-38 Roof Attic No Insulation	Roof	New	Nonresidential	Steep slope	To Be Determined	Aged solar reflectance and thermal emittance	Reflectance	0.25	Reflectance[1]	0.63	
							Emittance	0.75	Emittance	0.75	
							SRI		SRI		
R-38 Roof Attic No Insulation	Roof	New	Nonresidential	Low slope	To Be Determined	Aged solar reflectance and thermal emittance	Reflectance	0.63	Reflectance[1]	0.63	
							Emittance	0.75	Emittance	0.75	
							SRI		SRI		

H. WALL ASSEMBLY SCHEDULE

This table demonstrates compliance with prescriptive wall assembly requirements in 140.3(a)/ 170.2(a) for new constructions, 141.0(a)/ 180.1 for additions and 141.0(b)1B/ 180.2 for alterations.

01	Indicate wall types included in the project:[1]	☒ Framed	☐ Mass (new only)	☐ Concrete Sandwich Panel (new only)	☐ SIPS	☐ ICF (new only)				
		☐ Metal Panels	☐ Metal Building	☐ Spandrel/ Curtain Wall	☐ Straw Bale	☐ Log Home (new only)				

[1] *FOOTNOTES: Wall types indicated above as "(new only)" do not have Title 24, Part 6 requirements for alterations. New construction and additions do have requirements and should be clicked above and compliance demonstrated within this table.*

Generated Date/Time:
Documentation Software: EnergyPro

CA Building Energy Efficiency Standards - 2022 Nonresidential Compliance
Report Version: 2022.0.000
Schema Version: rev 20220101
Compliance ID: EnergyPro-4473-1125-5279
Report Generated: 2025-11-26 09:26:48

STATE OF CALIFORNIA
Envelope Component Approach
CALIFORNIA ENERGY COMMISSION

CERTIFICATE OF COMPLIANCE		NRCC-ENV-E
Project Name: Perris Fire Station	**Report Page:**	**(Page 13 of 34)**
	Date Prepared:	11/26/2025

F. ROOF ASSEMBLY SCHEDULE

07	08	09	10	11	12	13	14	15		16
Tag/Plan Detail ID	How Design U-factor was determined	Roof Type & Frame Material	Frame Spacing Depth	Cavity Insulation per Design[2]	Continuous Insulation per Design[2]	Thermal Performance Unit	Required Thermal Performance[3]	U-factor per Design		Net Area[4] ft²
Roof	JA4 Tables	Wood		38	0	U-factor	0.034	per JA4 per Software/ Other	0.026	80
Roof	JA4 Tables	Wood		38	0	U-factor	0.034	per JA4 per Software/ Other	0.026	100
Roof	JA4 Tables	Wood		38	0	U-factor	0.034	per JA4 per Software/ Other	0.026	100
Roof	JA4 Tables	Wood		38	0	U-factor	0.034	per JA4 per Software/ Other	0.026	100
Roof	JA4 Tables	Wood		38	0	U-factor	0.034	per JA4 per Software/ Other	0.026	195

[1] *FOOTNOTES: If any individual assembly is non-compliant, assemblies may show compliance using an area-weighted calculation. Metal building roofs may not be combined with other roof types. The area-weighted compliance option is not available for alterations demonstrating compliance with R-values in Table 141.0-C.*
[2] *For alterations using U-factor as the Thermal Performance Unit, at least R-10 insulation must be above deck.*
[3] *If "R-value" is shown in cell 13 as the Thermal Performance Unit, the R-value shown here is for continuous insulation per Table 141.0-C.*
[4] *Roof area minus any fenestration/ skylight area*

Area-Weighted Average U-factor Compliance Calculation for Framed/ SIPs/ Span Deck & Concrete/ Metal Panel Roofs

01	02	03		04		05
Roof Type	Total Area of Roof Type (ft²)	Area-weighted U-factor for Roof Type				Compliance Results Using Area-Weighted Calculation Option
		Required		Designed		

Generated Date/Time:
Documentation Software: EnergyPro

CA Building Energy Efficiency Standards - 2022 Nonresidential Compliance
Report Version: 2022.0.000
Schema Version: rev 20220101
Compliance ID: EnergyPro-4473-1125-5279
Report Generated: 2025-11-26 09:26:48

STATE OF CALIFORNIA
Envelope Component Approach
CALIFORNIA ENERGY COMMISSION

CERTIFICATE OF COMPLIANCE		NRCC-ENV-E
Project Name: Perris Fire Station	**Report Page:**	**(Page 18 of 34)**
	Date Prepared:	11/26/2025

H. WALL ASSEMBLY SCHEDULE

03	04	05	06	07	08	09	10	11	12		13
Tag/Plan Detail ID	Occupancy & Status	How Design U-factor was determined	Location/ Fire Rating	Frame Material, Spacing & Depth	Cavity Insulation per Design	Continuous Insulation per Design	Thermal Performance Unit	Required Thermal Performance	U-factor per Design		Net Area[3] ft²
East Wall 8x8	Nonresidential/ Relocatable 1 CZ: New	JA4 Tables	Exterior wall	Wood 1/2" gyp 16" OC 2x6	21	4	U-factor	0.059	per JA4 per Software/ Other	0.051	64
North Wall 10x8	Nonresidential/ Relocatable 1 CZ: New	JA4 Tables	Exterior wall	Wood 1/2" gyp 16" OC 2x6	21	4	U-factor	0.059	per JA4 per Software/ Other	0.051	80
North Wall 13x10	Nonresidential/ Relocatable 1 CZ: New	JA4 Tables	Exterior wall	Wood 1/2" gyp 16" OC 2x6	21	4	U-factor	0.059	per JA4 per Software/ Other	0.051	130
West Wall 24x10	Nonresidential/ Relocatable 1 CZ: New	JA4 Tables	Exterior wall	Wood 1/2" gyp 16" OC 2x6	21	4	U-factor	0.059	per JA4 per Software/ Other	0.051	196.5
North Wall 9.25x10	Nonresidential/ Relocatable 1 CZ: New	JA4 Tables	Exterior wall	Wood 1/2" gyp 16" OC 2x6	21	4	U-factor	0.059	per JA4 per Software/ Other	0.051	67
West Wall 10x9	Nonresidential/ Relocatable 1 CZ: New	JA4 Tables	Exterior wall	Wood 1/2" gyp 16" OC 2x6	21	4	U-factor	0.059	per JA4 per Software/ Other	0.051	74

Generated Date/Time:
Documentation Software: EnergyPro

CA Building Energy Efficiency Standards - 2022 Nonresidential Compliance
Report Version: 2022.0.000
Schema Version: rev 20220101
Compliance ID: EnergyPro-4473-1125-5279
Report Generated: 2025-11-26 09:26:48

STATE OF CALIFORNIA
Envelope Component Approach
CALIFORNIA ENERGY COMMISSION

CERTIFICATE OF COMPLIANCE		NRCC-ENV-E
Project Name: Perris Fire Station	**Report Page:**	**(Page 17 of 34)**
	Date Prepared:	11/26/2025

H. WALL ASSEMBLY SCHEDULE

03	04	05	06	07	08	09	10	11	12		13
Tag/Plan Detail ID	Occupancy & Status	How Design U-factor was determined	Location/ Fire Rating	Frame Material, Spacing & Depth	Cavity Insulation per Design	Continuous Insulation per Design	Thermal Performance Unit	Required Thermal Performance	U-factor per Design		Net Area[3] ft²
East Wall 6x9	Hotel/Motel: New	JA4 Tables	Exterior wall	Wood 1/2" gyp 16" OC 2x6	21	4	U-factor	0.059	per JA4 per Software/ Other	0.051	54
South Wall 5x9	Hotel/Motel: New	JA4 Tables	Exterior wall	Wood 1/2" gyp 16" OC 2x6	21	4	U-factor	0.059	per JA4 per Software/ Other	0.051	45
East Wall 5.5x9	Hotel/Motel: New	JA4 Tables	Exterior wall	Wood 1/2" gyp 16" OC 2x6	21	4	U-factor	0.059	per JA4 per Software/ Other	0.051	28.5
South Wall 3x9	Hotel/Motel: New	JA4 Tables	Exterior wall	Wood 1/2" gyp 16" OC 2x6	21	4	U-factor	0.059	per JA4 per Software/ Other	0.051	27
North Wall 9.5x8	Hotel/Motel: New	JA4 Tables	Exterior wall	Wood 1/2" gyp 16" OC 2x6	21	4	U-factor	0.059	per JA4 per Software/ Other	0.051	39
West Wall 4x9	Hotel/Motel: New	JA4 Tables	Exterior wall	Wood 1/2" gyp 16" OC 2x6	21	4	U-factor	0.059	per JA4 per Software/ Other	0.051	36

Generated Date/Time:
Documentation Software: EnergyPro

CA Building Energy Efficiency Standards - 2022 Nonresidential Compliance
Report Version: 2022.0.000
Schema Version: rev 20220101
Compliance ID: EnergyPro-4473-1125-5279
Report Generated: 2025-11-26 09:26:48

STATE OF CALIFORNIA
Envelope Component Approach
CALIFORNIA ENERGY COMMISSION

CERTIFICATE OF COMPLIANCE		NRCC-ENV-E
Project Name: Perris Fire Station	**Report Page:**	**(Page 16 of 34)**
	Date Prepared:	11/26/2025

H. WALL ASSEMBLY SCHEDULE

03	04	05	06	07	08	09	10	11	12		13
Tag/Plan Detail ID	Occupancy & Status	How Design U-factor was determined	Location/ Fire Rating	Frame Material, Spacing & Depth	Cavity Insulation per Design	Continuous Insulation per Design	Thermal Performance Unit	Required Thermal Performance	U-factor per Design		Net Area[3] ft²
East Wall 9.25x9	Hotel/Motel: New	JA4 Tables	Exterior wall	Wood 1/2" gyp 16" OC 2x6	21	4	U-factor	0.059	per JA4 per Software/ Other	0.051	67.2
East Wall 9.5x9	Hotel/Motel: New	JA4 Tables	Exterior wall	Wood 1/2" gyp 16" OC 2x6	21	4	U-factor	0.059	per JA4 per Software/ Other	0.051	69.5
East Wall 9x9	Hotel/Motel: New	JA4 Tables	Exterior wall	Wood 1/2" gyp 16" OC 2x6	21	4	U-factor	0.059	per JA4 per Software/ Other	0.051	65
West Wall 9x9	Hotel/Motel: New	JA4 Tables	Exterior wall	Wood 1/2" gyp 16" OC 2x6	21	4	U-factor	0.059	per JA4 per Software/ Other	0.051	65
West Wall 9.75x9	Hotel/Motel: New	JA4 Tables	Exterior wall	Wood 1/2" gyp 16" OC 2x6	21	4	U-factor	0.059	per JA4 per Software/ Other	0.051	71.8
North Wall 9.75x9	Hotel/Motel: New	JA4 Tables	Exterior wall	Wood 1/2" gyp 16" OC 2x6	21	4	U-factor	0.059	per JA4 per Software/ Other	0.051	87.8

Generated Date/Time:
Documentation Software: EnergyPro

CA Building Energy Efficiency Standards - 2022 Nonresidential Compliance
Report Version: 2022.0.000
Schema Version: rev 20220101
Compliance ID: EnergyPro-4473-1125-5279
Report Generated: 2025-11-26 09:26:48

STK ARCHITECTS, INC.
42095 ZEVO DR., TEMECULA, CALIFORNIA 92590-3780
Phone: 951.296.9110 Fax: 951.296.6079 Email: stk@stkinc.com

CONSULTANT:

REVIEWED FOR CODE COMPLIANCE

THESE DRAWINGS AND DOCUMENTS HAVE BEEN REVIEWED AND FOUND TO BE IN SUBSTANTIAL COMPLIANCE WITH THE APPROVED DESIGN CONCEPT AND ARE SUBJECT TO ALL CONDITIONS IMPOSED IN THE LETTER OF APPROVAL. THE CONTRACTOR SHALL BE RESPONSIBLE FOR THE CONSTRUCTION OF ALL WORK SHOWN ON THESE DRAWINGS AND FOR COMPLIANCE WITH ALL REQUIREMENTS OF THE APPROVED CONSTRUCTION DOCUMENTS. CONTACT DESIGN WEST ENGINEERING AT (760) 603-2300 TO SCHEDULE ANY REQUIRED INSPECTIONS. CONTRACTOR SHALL

STATE OF CALIFORNIA

Envelope Component Approach

CALIFORNIA ENERGY COMMISSION

CERTIFICATE OF COMPLIANCE		NRCC-ENV-E
Project Name: Perris Fire Station	**Report Page:**	(Page 21 of 34)
	Date Prepared:	11/26/2025

H. WALL ASSEMBLY SCHEDULE

03	04	05	06	07	08	09	10	11	12		13
Tag/Plan Detail ID	Occupancy & Status	How Design U-factor was determined	Location/ Fire Rating	Frame Material, Spacing & Depth	Cavity Insulation per Design	Continuous Insulation per Design	Thermal Performance Unit	Required Thermal Performance	U-factor per Design		Net Area[3] ft[2]
North Wall	Nonresidential/ Relocatable 1 CZ: New	JA4 Tables	Exterior wall	Wood 1/2" gyp 16" OC 2x6	21	4	U-factor	0.059	per JA4 / per Software/ Other	0.051	134
South Wall	Nonresidential/ Relocatable 1 CZ: New	JA4 Tables	Exterior wall	Wood 1/2" gyp 16" OC 2x6	21	4	U-factor	0.059	per JA4 / per Software/ Other	0.051	19.5
Exterior Wall	Nonresidential/ Relocatable 1 CZ: New	JA4 Tables	Exterior wall	Wood 1/2" gyp 16" OC 2x6	21	4	U-factor	0.059	per JA4 / per Software/ Other	0.051	128
North Wall	Nonresidential/ Relocatable 1 CZ: New	JA4 Tables	Exterior wall	Wood 1/2" gyp 16" OC 2x6	21	4	U-factor	0.059	per JA4 / per Software/ Other	0.051	122
West Wall	Nonresidential/ Relocatable 1 CZ: New	JA4 Tables	Exterior wall	Wood 1/2" gyp 16" OC 2x6	21	4	U-factor	0.059	per JA4 / per Software/ Other	0.051	67
West Wall	Nonresidential/ Relocatable 1 CZ: New	JA4 Tables	Exterior wall	Wood 1/2" gyp 16" OC 2x6	21	4	U-factor	0.059	per JA4 / per Software/ Other	0.051	76.5

STATE OF CALIFORNIA

Envelope Component Approach

CALIFORNIA ENERGY COMMISSION

CERTIFICATE OF COMPLIANCE		NRCC-ENV-E
Project Name: Perris Fire Station	**Report Page:**	(Page 20 of 34)
	Date Prepared:	11/26/2025

H. WALL ASSEMBLY SCHEDULE

03	04	05	06	07	08	09	10	11	12		13
Tag/Plan Detail ID	Occupancy & Status	How Design U-factor was determined	Location/ Fire Rating	Frame Material, Spacing & Depth	Cavity Insulation per Design	Continuous Insulation per Design	Thermal Performance Unit	Required Thermal Performance	U-factor per Design		Net Area[3] ft[2]
North Wall	Nonresidential/ Relocatable 1 CZ: New	JA4 Tables	Exterior wall	Wood 1/2" gyp 16" OC 2x6	21	4	U-factor	0.059	per JA4 / per Software/ Other	0.051	173
East Wall	Nonresidential/ Relocatable 1 CZ: New	JA4 Tables	Exterior wall	Wood 1/2" gyp 16" OC 2x6	21	4	U-factor	0.059	per JA4 / per Software/ Other	0.051	240
South Wall	Nonresidential/ Relocatable 1 CZ: New	JA4 Tables	Exterior wall	Wood 1/2" gyp 16" OC 2x6	21	4	U-factor	0.059	per JA4 / per Software/ Other	0.051	31
East Wall	Nonresidential/ Relocatable 1 CZ: New	JA4 Tables	Exterior wall	Wood 1/2" gyp 16" OC 2x6	21	4	U-factor	0.059	per JA4 / per Software/ Other	0.051	240
South Wall	Nonresidential/ Relocatable 1 CZ: New	JA4 Tables	Exterior wall	Wood 1/2" gyp 16" OC 2x6	21	4	U-factor	0.059	per JA4 / per Software/ Other	0.051	317.5
South Wall	Nonresidential/ Relocatable 1 CZ: New	JA4 Tables	Exterior wall	Wood 1/2" gyp 16" OC 2x6	21	4	U-factor	0.059	per JA4 / per Software/ Other	0.051	32

STATE OF CALIFORNIA

Envelope Component Approach

CALIFORNIA ENERGY COMMISSION

CERTIFICATE OF COMPLIANCE		NRCC-ENV-E
Project Name: Perris Fire Station	**Report Page:**	(Page 19 of 34)
	Date Prepared:	11/26/2025

H. WALL ASSEMBLY SCHEDULE

03	04	05	06	07	08	09	10	11	12		13
Tag/Plan Detail ID	Occupancy & Status	How Design U-factor was determined	Location/ Fire Rating	Frame Material, Spacing & Depth	Cavity Insulation per Design	Continuous Insulation per Design	Thermal Performance Unit	Required Thermal Performance	U-factor per Design		Net Area[3] ft[2]
West Wall 15.25x12	Nonresidential/ Relocatable 1 CZ: New	JA4 Tables	Exterior wall	Wood 1/2" gyp 16" OC 2x6	21	4	U-factor	0.059	per JA4 / per Software/ Other	0.051	55
South Wall 5.75x10	Nonresidential/ Relocatable 1 CZ: New	JA4 Tables	Exterior wall	Wood 1/2" gyp 16" OC 2x6	21	4	U-factor	0.059	per JA4 / per Software/ Other	0.051	57.5
North Wall 23x10	Nonresidential/ Relocatable 1 CZ: New	JA4 Tables	Exterior wall	Wood 1/2" gyp 16" OC 2x6	21	4	U-factor	0.059	per JA4 / per Software/ Other	0.051	198.5
West Wall 23x10	Nonresidential/ Relocatable 1 CZ: New	JA4 Tables	Exterior wall	Wood 1/2" gyp 16" OC 2x6	21	4	U-factor	0.059	per JA4 / per Software/ Other	0.051	179
North Wall 5.75x10	Nonresidential/ Relocatable 1 CZ: New	JA4 Tables	Exterior wall	Wood 1/2" gyp 16" OC 2x6	21	4	U-factor	0.059	per JA4 / per Software/ Other	0.051	57.5
East Wall	Nonresidential/ Relocatable 1 CZ: New	JA4 Tables	Exterior wall	Wood 1/2" gyp 16" OC 2x6	21	4	U-factor	0.059	per JA4 / per Software/ Other	0.051	383

STATE OF CALIFORNIA

Envelope Component Approach

CALIFORNIA ENERGY COMMISSION

CERTIFICATE OF COMPLIANCE		NRCC-ENV-E
Project Name: Perris Fire Station	**Report Page:**	(Page 24 of 34)
	Date Prepared:	11/26/2025

K. FENESTRATION AND GLAZED DOOR SCHEDULE

Vertical Fenestration and Glazed Doors- Total Building & West Facing Area (New Construction & Additions Only)

01	02	03	04	05
Elevation Item Tag/ Description	Orientation (Azimuth)[1]	Gross Exterior Wall Area[2] (ft[2])	Display Perimeter Length[2] (ft)	Vertical Fenestration Area per Design[3] (ft[2])
North	North Facing	1376.8	0	202.5
East	East Facing	1777.2	0	267
South	South Facing	780.7	0	66.5
West	West Facing	1703.2	0	415

06	Maximum Allowed Vertical Fenestration (ft[2])- All Orientations	2202.4	07	Total Vertical Fenestration (ft[2]) per design- All Orientations	951
08	Maximum Allowed Vertical Fenestration (ft[2])- West Facing	681.3	09	Total Vertical Fenestration (ft[2]) per design- West Facing	415

[1]FOOTNOTES: Orientation between 226 deg and 315 deg are considered "West Facing". A diagram has been provided in the Nonresidential Compliance Manual for visual reference.
[2]Do not include demising walls per 140.3(a)5 .
[3] Includes glazed door fenestration area .

Vertical Fenestration And Glazed Doors- U-factor, Solar Heat Gain Coefficient (RSHGC/ SHGC), Visible Transmittance (VT)

01	☒	Calculate Area-Weighted Average U-factor for Vertical Fenestration and Glazed Doors[1]
02	☒	Calculate Area-Weighted Average (R)SHGC for Vertical Fenestration and Glazed Doors[1]
03	☒	Calculate Area-Weighted Average VT for Vertical Fenestration and Glazed Doors[1]

Vertical Fenestration And Glazed Doors- U-factor, Solar Heat Gain Coefficient (RSHGC/ SHGC), Visible Transmittance (VT)

04	05	06	07	08	09	10	11	12	13
Tag/Plan Detail ID	Fenestration Type	Occupancy & Status	U-factor/ (R)SHGC Compliance Method	VT Compliance Method	Calculation Method for Performance Values per Design[2]	Product Performance Unit	Required Product Performance	Product Performance per Design	Area ft[2]
Window	Operable window	Hotel/ Motel: : New			NFRC Certified	U-factor (max)	0.46	0.46	16
					☐ Overhang/ Slats used for RSHGC	(R)SHGC (max)	0.22	0.22	
						VT (min)	0.32	0.5	

STATE OF CALIFORNIA

Envelope Component Approach

CALIFORNIA ENERGY COMMISSION

CERTIFICATE OF COMPLIANCE		NRCC-ENV-E
Project Name: Perris Fire Station	**Report Page:**	(Page 23 of 34)
	Date Prepared:	11/26/2025

H. WALL ASSEMBLY SCHEDULE

Area-Weighted Average U-factor Compliance Calculation for Wood Framed/ SIPs/ Spandrel/ Curtain/ Metal Panel/ Straw Bale Wall Types

01	02	03	04	05
Wall Type	Total Area of Wall Type (ft[2])	Area-weighted U-factor for Wall Type: Required	Area-weighted U-factor for Wall Type: Designed	Compliance Results Using Area-Weighted Calculation Option
Framed	4555	0.059	0.051	
Total for all Wall Types:	4555	0.059	0.051	COMPLIES

I. FLOOR ASSEMBLY SCHEDULE

This section does not apply to this project.

J. EXTERIOR DOOR SCHEDULE

This table demonstrates compliance with prescriptive exterior door requirements in 140.3(a)7/ 170.2(a)4 for new construction or additions. Doors which are being replaced (alterations) do not need to be documented in this table because there are no Title 24, Part 6 requirements that apply. Exterior doors separate conditioned space from unconditioned space or from ambient air. Doors that are more than 25% glass in area are considered Glazed Doors and should be documented on Table K with fenestration per Table B.

01	02	03	04	05	06	07	
Tag/Plan Detail ID	Name/Description	Occupancy Type	Door Type	Door Insulation	Maximum Allowed U-factor	U-factor per Design	
	Wood Door	Nonresidential	Swinging	Any other wood door	0.7	per JA4	0.5
	Insulated Door	Nonresidential	Swinging	Any other wood door	0.7	per JA4	0.2

K. FENESTRATION AND GLAZED DOOR SCHEDULE

This table demonstrates compliance with prescriptive fenestration requirements in 140.3(a)5/ 170.2(a)3 for new constructions, 141.0(a)/ 180.1 for additions, or 141.0(b)2A/ 180.2 for alterations. Exterior doors that are more than 25% glass in area are considered Glazed Doors and should be documented on this table with fenestration.

01	Indicate fenestration types included in the project:[1]	☐ Vertical (alterations)	☒ Vertical (new)	☐ Skylights	☐ Glazed Doors (new only)

[1] FOOTNOTES: Fenestration types indicated above as "(new only)" do not have Title 24, Part 6 requirements for alterations. New construction and additions do have requirements and should be clicked above and compliance demonstrated within this table.

STATE OF CALIFORNIA

Envelope Component Approach

CALIFORNIA ENERGY COMMISSION

CERTIFICATE OF COMPLIANCE		NRCC-ENV-E
Project Name: Perris Fire Station	**Report Page:**	(Page 22 of 34)
	Date Prepared:	11/26/2025

H. WALL ASSEMBLY SCHEDULE

03	04	05	06	07	08	09	10	11	12		13
Tag/Plan Detail ID	Occupancy & Status	How Design U-factor was determined	Location/ Fire Rating	Frame Material, Spacing & Depth	Cavity Insulation per Design	Continuous Insulation per Design	Thermal Performance Unit	Required Thermal Performance	U-factor per Design		Net Area[3] ft[2]
West Wall	Nonresidential/ Relocatable 1 CZ: New	JA4 Tables	Exterior wall	Wood 1/2" gyp 16" OC 2x6	21	4	U-factor	0.059	per JA4 / per Software/ Other	0.051	93
West Wall	Nonresidential/ Relocatable 1 CZ: New	JA4 Tables	Exterior wall	Wood 1/2" gyp 16" OC 2x6	21	4	U-factor	0.059	per JA4 / per Software/ Other	0.051	93
West Wall	Nonresidential/ Relocatable 1 CZ: New	JA4 Tables	Exterior wall	Wood 1/2" gyp 16" OC 2x6	21	4	U-factor	0.059	per JA4 / per Software/ Other	0.051	93
West Wall	Nonresidential/ Relocatable 1 CZ: New	JA4 Tables	Exterior wall	Wood 1/2" gyp 16" OC 2x6	21	4	U-factor	0.059	per JA4 / per Software/ Other	0.051	167.5

[1]FOOTNOTES: If any individual assembly is non-compliant, assemblies may show compliance using an area-weighted calculation. Metal framed walls may not be combined with other wall types. Wood framed walls are combined with SIPS, spandrel & curtain, metal panel and straw bale wall types. The area-weighted compliance option is not available for alterations demonstrating compliance with R-values in Table 141.0-C.
[2] If "R-value" is shown in cell 10 as the Thermal Performance Unit, the R-value shown here is for cavity insulation per 141.0(b)1B.
[3] Wall area minus any fenestration area

STATE OF CALIFORNIA

Envelope Component Approach

CALIFORNIA ENERGY COMMISSION

CERTIFICATE OF COMPLIANCE		NRCC-ENV-E
Project Name: Perris Fire Station	**Report Page:**	(Page 27 of 34)
	Date Prepared:	11/26/2025

K. FENESTRATION AND GLAZED DOOR SCHEDULE

Vertical Fenestration And Glazed Doors- U-factor, Solar Heat Gain Coefficient (RSHGC/ SHGC), Visible Transmittance (VT)

04	05	06	07	08	09	10	11	12	13
Tag/Plan Detail ID	Fenestration Type	Occupancy & Status	U-factor/ (R)SHGC Compliance Method	VT Compliance Method	Calculation Method for Performance Values per Design[2]	Product Performance Unit	Required Product Performance	Product Performance per Design	Area ft[2]
Window	Fixed window	Nonresidential/ Relocatable 1 CZ: : New			NFRC Certified	U-factor (max)	0.36	0.36	4.5
					☐ Overhang/ Slats used for RSHGC	(R)SHGC (max)	0.25	0.22	
						VT (min)	0.42	0.5	
Window	Fixed window	Nonresidential/ Relocatable 1 CZ: : New			NFRC Certified	U-factor (max)	0.36	0.36	4.5
					☐ Overhang/ Slats used for RSHGC	(R)SHGC (max)	0.25	0.22	
						VT (min)	0.42	0.5	
Window	Fixed window	Nonresidential/ Relocatable 1 CZ: : New			NFRC Certified	U-factor (max)	0.36	0.36	4.5
					☐ Overhang/ Slats used for RSHGC	(R)SHGC (max)	0.25	0.22	
						VT (min)	0.42	0.5	
Office Window	Fixed window	Nonresidential/ Relocatable 1 CZ: : New			NFRC Certified	U-factor (max)	0.36	0.36	16
					☐ Overhang/ Slats used for RSHGC	(R)SHGC (max)	0.25	0.22	
						VT (min)	0.42	0.5	
Window	Fixed window	Nonresidential/ Relocatable 1 CZ: : New			NFRC Certified	U-factor (max)	0.36	0.36	107
					☐ Overhang/ Slats used for RSHGC	(R)SHGC (max)	0.25	0.22	
						VT (min)	0.42	0.5	
Glass Door	Glazed door	Nonresidential/ Relocatable 1 CZ: : New			NFRC Certified	U-factor (max)	0.45	0.45	21
					☐ Overhang/ Slats used for RSHGC	(R)SHGC (max)	0.23	0.22	
						VT (min)	0.17	0.5	

STATE OF CALIFORNIA

Envelope Component Approach

CALIFORNIA ENERGY COMMISSION

CERTIFICATE OF COMPLIANCE		NRCC-ENV-E
Project Name: Perris Fire Station	**Report Page:**	(Page 26 of 34)
	Date Prepared:	11/26/2025

K. FENESTRATION AND GLAZED DOOR SCHEDULE

Vertical Fenestration And Glazed Doors- U-factor, Solar Heat Gain Coefficient (RSHGC/ SHGC), Visible Transmittance (VT)

04	05	06	07	08	09	10	11	12	13
Tag/Plan Detail ID	Fenestration Type	Occupancy & Status	U-factor/ (R)SHGC Compliance Method	VT Compliance Method	Calculation Method for Performance Values per Design[2]	Product Performance Unit	Required Product Performance	Product Performance per Design	Area ft[2]
Window	Operable window	Hotel/ Motel: : New			NFRC Certified	U-factor (max)	0.46	0.46	16
					☐ Overhang/ Slats used for RSHGC	(R)SHGC (max)	0.22	0.22	
						VT (min)	0.32	0.5	
Window	Operable window	Hotel/ Motel: : New			NFRC Certified	U-factor (max)	0.46	0.46	16
					☐ Overhang/ Slats used for RSHGC	(R)SHGC (max)	0.22	0.22	
						VT (min)	0.32	0.5	
Window	Operable window	Hotel/ Motel: : New			NFRC Certified	U-factor (max)	0.46	0.46	16
					☐ Overhang/ Slats used for RSHGC	(R)SHGC (max)	0.22	0.22	
						VT (min)	0.32	0.5	
Window	Fixed window	Nonresidential/ Relocatable 1 CZ: : New			NFRC Certified	U-factor (max)	0.36	0.36	4.5
					☐ Overhang/ Slats used for RSHGC	(R)SHGC (max)	0.25	0.22	
						VT (min)	0.42	0.5	
Window	Fixed window	Nonresidential/ Relocatable 1 CZ: : New			NFRC Certified	U-factor (max)	0.36	0.36	4.5
					☐ Overhang/ Slats used for RSHGC	(R)SHGC (max)	0.25	0.22	
						VT (min)	0.42	0.5	
Window	Fixed window	Nonresidential/ Relocatable 1 CZ: : New			NFRC Certified	U-factor (max)	0.36	0.36	4.5
					☐ Overhang/ Slats used for RSHGC	(R)SHGC (max)	0.25	0.22	
						VT (min)	0.42	0.5	

STATE OF CALIFORNIA

Envelope Component Approach

CALIFORNIA ENERGY COMMISSION

CERTIFICATE OF COMPLIANCE		NRCC-ENV-E
Project Name: Perris Fire Station	**Report Page:**	(Page 25 of 34)
	Date Prepared:	11/26/2025

K. FENESTRATION AND GLAZED DOOR SCHEDULE

Vertical Fenestration And Glazed Doors- U-factor, Solar Heat Gain Coefficient (RSHGC/ SHGC), Visible Transmittance (VT)

04	05	06	07	08	09	10	11	12	13
Tag/Plan Detail ID	Fenestration Type	Occupancy & Status	U-factor/ (R)SHGC Compliance Method	VT Compliance Method	Calculation Method for Performance Values per Design[2]	Product Performance Unit	Required Product Performance	Product Performance per Design	Area ft[2]
Window	Operable window	Hotel/ Motel: : New			NFRC Certified	U-factor (max)	0.46	0.46	16
					☐ Overhang/ Slats used for RSHGC	(R)SHGC (max)	0.22	0.22	
						VT (min)	0.32	0.5	
Window	Operable window	Hotel/ Motel: : New			NFRC Certified	U-factor (max)	0.46	0.46	16
					☐ Overhang/ Slats used for RSHGC	(R)SHGC (max)	0.22	0.22	
						VT (min)	0.32	0.5	
Window	Operable window	Hotel/ Motel: : New			NFRC Certified	U-factor (max)	0.46	0.46	16
					☐ Overhang/ Slats used for RSHGC	(R)SHGC (max)	0.22	0.22	
						VT (min)	0.32	0.5	
Window	Operable window	Hotel/ Motel: : New			NFRC Certified	U-factor (max)	0.46	0.46	16
					☐ Overhang/ Slats used for RSHGC	(R)SHGC (max)	0.22	0.22	
						VT (min)	0.32	0.5	
Window	Operable window	Hotel/ Motel: : New			NFRC Certified	U-factor (max)	0.46	0.46	16
					☐ Overhang/ Slats used for RSHGC	(R)SHGC (max)	0.22	0.22	
						VT (min)	0.32	0.5	
Window	Operable window	Hotel/ Motel: : New			NFRC Certified	U-factor (max)	0.46	0.46	16
					☐ Overhang/ Slats used for RSHGC	(R)SHGC (max)	0.22	0.22	
						VT (min)	0.32	0.5	

STK ARCHITECTURE, INC.
42095 ZEVO DR., TEMECULA, CALIFORNIA 92590-3780
Phone: 951.296.9110 Fax: 951.296.6079 Email: stk@stkinc.com

CONSULTANT:

REVIEWED FOR CODE COMPLIANCE
BUILDING BUREAU SOLUTIONS INC.

DESIGN WEST ENGINEERING
MECHANICAL • ELECTRICAL • ENERGY CONSULTANTS
Email: code@designwesteng.com

REGISTERED PROFESSIONAL ENGINEER
STEVEN M. JOHNSON
No. 33209
SIGNED:04/15/2026
MECHANICAL
STATE OF CALIFORNIA

PROJECT ADMINISTERED BY:
CITY OF PERRIS

101 NORTH "D" STREET
PERRIS, CA 92570

PROJECT NAME:
SOUTH FIRE STATION AND ADMINISTRATIVE BUILDING

PROJECT CIP: F077

2495 MURRIETA ROAD
PERRIS, CA 92585

ISSUE INFORMATION:

DATE:	INFORMATION:
11-26-25	95% CD SUBMITTAL
02-05-26	△1 1st PC RESPONSE
02-19-26	△2 2nd PC RESPONSE

SHEET INFORMATION:
STK PROJECT NO.: 365-03-25
SCALE: AS NOTED
DATE: NOVEMBER 2025
PLOT DATE: –
DRAWN BY: JG / JW

SEAL:

SHEET TITLE:
ENERGY COMPLIANCE DOCUMENTS

SHEET NO.:
M5.3

25-114

04/14/2026 6:47PM R:_PROJECT\2025\25-114 Perris Fire Station_CAD\25-114 M-ENV-sheets.dwg

STATE OF CALIFORNIA

Envelope Component Approach

CALIFORNIA ENERGY COMMISSION

CERTIFICATE OF COMPLIANCE		NRCC-ENV-E
Project Name: Perris Fire Station	**Report Page:**	(Page 30 of 34)
	Date Prepared:	11/26/2025

K. FENESTRATION AND GLAZED DOOR SCHEDULE

Vertical Fenestration And Glazed Doors- U-factor, Solar Heat Gain Coefficient (RSHGC/ SHGC), Visible Transmittance (VT)

04	05	06	07	08	09	10	11	12	13
Tag/Plan Detail ID	Fenestration Type	Occupancy & Status	U-factor/ (R)SHGC Compliance Method	VT Compliance Method	Calculation Method for Performance Values per Design[2]	Product Performance Unit	Required Product Performance	Product Performance per Design	Area ft²
Window	Fixed window	Nonresidential/ Relocatable 1 CZ: : New			NFRC Certified	U-factor (max)	0.36	0.36	54
					☐ Overhang/ Slats used for RSHGC	(R)SHGC (max)	0.25	0.22	
						VT (min)	0.42	0.5	
Window	Fixed window	Nonresidential/ Relocatable 1 CZ: : New			NFRC Certified	U-factor (max)	0.36	0.36	54
					☐ Overhang/ Slats used for RSHGC	(R)SHGC (max)	0.25	0.22	
						VT (min)	0.42	0.5	
Window	Fixed window	Nonresidential/ Relocatable 1 CZ: : New			NFRC Certified	U-factor (max)	0.36	0.36	54.5
					☐ Overhang/ Slats used for RSHGC	(R)SHGC (max)	0.25	0.22	
						VT (min)	0.42	0.5	
Window	Fixed window	Nonresidential/ Relocatable 1 CZ: : New			NFRC Certified	U-factor (max)	0.36	0.36	27
					☐ Overhang/ Slats used for RSHGC	(R)SHGC (max)	0.25	0.22	
						VT (min)	0.42	0.5	
Window	Fixed window	Nonresidential/ Relocatable 1 CZ: : New			NFRC Certified	U-factor (max)	0.36	0.36	6.5
					☐ Overhang/ Slats used for RSHGC	(R)SHGC (max)	0.25	0.22	
						VT (min)	0.42	0.5	
Window	Fixed window	Nonresidential/ Relocatable 1 CZ: : New			NFRC Certified	U-factor (max)	0.36	0.36	12
					☐ Overhang/ Slats used for RSHGC	(R)SHGC (max)	0.25	0.22	
						VT (min)	0.42	0.5	

STATE OF CALIFORNIA

Envelope Component Approach

CALIFORNIA ENERGY COMMISSION

CERTIFICATE OF COMPLIANCE		NRCC-ENV-E
Project Name: Perris Fire Station	**Report Page:**	(Page 29 of 34)
	Date Prepared:	11/26/2025

K. FENESTRATION AND GLAZED DOOR SCHEDULE

Vertical Fenestration And Glazed Doors- U-factor, Solar Heat Gain Coefficient (RSHGC/ SHGC), Visible Transmittance (VT)

04	05	06	07	08	09	10	11	12	13
Tag/Plan Detail ID	Fenestration Type	Occupancy & Status	U-factor/ (R)SHGC Compliance Method	VT Compliance Method	Calculation Method for Performance Values per Design[2]	Product Performance Unit	Required Product Performance	Product Performance per Design	Area ft²
Window	Fixed window	Nonresidential/ Relocatable 1 CZ: : New			NFRC Certified	U-factor (max)	0.36	0.36	4.5
					☐ Overhang/ Slats used for RSHGC	(R)SHGC (max)	0.25	0.22	
						VT (min)	0.42	0.5	
Window	Fixed window	Nonresidential/ Relocatable 1 CZ: : New			NFRC Certified	U-factor (max)	0.36	0.36	4.5
					☐ Overhang/ Slats used for RSHGC	(R)SHGC (max)	0.25	0.22	
						VT (min)	0.42	0.5	
Window	Fixed window	Nonresidential/ Relocatable 1 CZ: : New			NFRC Certified	U-factor (max)	0.36	0.36	4.5
					☐ Overhang/ Slats used for RSHGC	(R)SHGC (max)	0.25	0.22	
						VT (min)	0.42	0.5	
Glass Door	Glazed door	Nonresidential/ Relocatable 1 CZ: : New			NFRC Certified	U-factor (max)	0.45	0.45	42
					☐ Overhang/ Slats used for RSHGC	(R)SHGC (max)	0.23	0.22	
						VT (min)	0.17	0.5	
Window	Fixed window	Nonresidential/ Relocatable 1 CZ: : New			NFRC Certified	U-factor (max)	0.36	0.36	47
					☐ Overhang/ Slats used for RSHGC	(R)SHGC (max)	0.25	0.22	
						VT (min)	0.42	0.5	
Window	Fixed window	Nonresidential/ Relocatable 1 CZ: : New			NFRC Certified	U-factor (max)	0.36	0.36	47
					☐ Overhang/ Slats used for RSHGC	(R)SHGC (max)	0.25	0.22	
						VT (min)	0.42	0.5	

STATE OF CALIFORNIA

Envelope Component Approach

CALIFORNIA ENERGY COMMISSION

CERTIFICATE OF COMPLIANCE		NRCC-ENV-E
Project Name: Perris Fire Station	**Report Page:**	(Page 28 of 34)
	Date Prepared:	11/26/2025

K. FENESTRATION AND GLAZED DOOR SCHEDULE

Vertical Fenestration And Glazed Doors- U-factor, Solar Heat Gain Coefficient (RSHGC/ SHGC), Visible Transmittance (VT)

04	05	06	07	08	09	10	11	12	13
Tag/Plan Detail ID	Fenestration Type	Occupancy & Status	U-factor/ (R)SHGC Compliance Method	VT Compliance Method	Calculation Method for Performance Values per Design[2]	Product Performance Unit	Required Product Performance	Product Performance per Design	Area ft²
Window	Fixed window	Nonresidential/ Relocatable 1 CZ: : New			NFRC Certified	U-factor (max)	0.36	0.36	4.5
					☐ Overhang/ Slats used for RSHGC	(R)SHGC (max)	0.25	0.22	
						VT (min)	0.42	0.5	
Window	Fixed window	Nonresidential/ Relocatable 1 CZ: : New			NFRC Certified	U-factor (max)	0.36	0.36	4.5
					☐ Overhang/ Slats used for RSHGC	(R)SHGC (max)	0.25	0.22	
						VT (min)	0.42	0.5	
Window	Fixed window	Nonresidential/ Relocatable 1 CZ: : New			NFRC Certified	U-factor (max)	0.36	0.36	4.5
					☐ Overhang/ Slats used for RSHGC	(R)SHGC (max)	0.25	0.22	
						VT (min)	0.42	0.5	
Window	Fixed window	Nonresidential/ Relocatable 1 CZ: : New			NFRC Certified	U-factor (max)	0.36	0.36	4.5
					☐ Overhang/ Slats used for RSHGC	(R)SHGC (max)	0.25	0.22	
						VT (min)	0.42	0.5	
Window	Fixed window	Nonresidential/ Relocatable 1 CZ: : New			NFRC Certified	U-factor (max)	0.36	0.36	4.5
					☐ Overhang/ Slats used for RSHGC	(R)SHGC (max)	0.25	0.22	
						VT (min)	0.42	0.5	
Window	Fixed window	Nonresidential/ Relocatable 1 CZ: : New			NFRC Certified	U-factor (max)	0.36	0.36	4.5
					☐ Overhang/ Slats used for RSHGC	(R)SHGC (max)	0.25	0.22	
						VT (min)	0.42	0.5	

STATE OF CALIFORNIA

Envelope Component Approach

CALIFORNIA ENERGY COMMISSION

CERTIFICATE OF COMPLIANCE		NRCC-ENV-E
Project Name: Perris Fire Station	**Report Page:**	(Page 33 of 34)
	Date Prepared:	11/26/2025

M. DECLARATION OF REQUIRED CERTIFICATES OF INSTALLATION

Selections have been made based on information provided in this document. If any selection have been changed by the permit applicant, an explanation should be included in Table E Additional Remarks. These documents must be provided to the building inspector during construction and can be found online

Form/Title
NRCI-ENV-01-E - Must be submitted for all buildings

N. DECLARATION OF REQUIRED CERTIFICATES OF ACCEPTANCE

Selections have been made based on information provided in previous tables of this document. If any selection needs to be changed, form user must provide an explanation in Table E Additional Remarks. These documents must be provided to the building inspector during construction and can be found online at https://www.energy.ca.gov/title24/2019standards/2019_compliance_documents/Nonresidential_Documents/NRCA/. Individuals who perform the field testing and verification work, and provide the information required for completion of the fenestration Certificate of Acceptance documentation are not required to be licensed professionals. However, the person who signs the Certificate of Acceptance document to certify compliance with the acceptance requirements shall be licensed as specified in Standards Section 10-103(a)4 and NA7.3.1

Form/Title	Systems/Spaces To Be Field Verified
NRCA-ENV-02-F must be submitted for all new, added or altered site built fenestration.	Fenestration;

O. DECLARATION OF REQUIRED CERTIFICATES OF VERIFICATION

There are no forms required for this project.

STATE OF CALIFORNIA

Envelope Component Approach

CALIFORNIA ENERGY COMMISSION

CERTIFICATE OF COMPLIANCE		NRCC-ENV-E
Project Name: Perris Fire Station	**Report Page:**	(Page 32 of 34)
	Date Prepared:	11/26/2025

K. FENESTRATION AND GLAZED DOOR SCHEDULE

Vertical Fenestration And Glazed Doors- U-factor, Solar Heat Gain Coefficient (RSHGC/ SHGC), Visible Transmittance (VT)

04	05	06	07	08	09	10	11	12	13
Tag/Plan Detail ID	Fenestration Type	Occupancy & Status	U-factor/ (R)SHGC Compliance Method	VT Compliance Method	Calculation Method for Performance Values per Design[2]	Product Performance Unit	Required Product Performance	Product Performance per Design	Area ft²
Window	Fixed window	Nonresidential/ Relocatable 1 CZ: : New			NFRC Certified	U-factor (max)	0.36	0.36	52.5
					☐ Overhang/ Slats used for RSHGC	(R)SHGC (max)	0.25	0.22	
						VT (min)	0.42	0.5	

[1]FOOTNOTES: If any individual fenestration product is non-compliant, products may show compliance using an area-weighted calculation. Chromogenic glazing is not included in area-weighted calculations. Area-weighted calculation shown in separate area-weighted table below.
[2]The NA6 Default Calculation can only be used for alterations or dwelling units in buildings with <= 3 habitable stories. Alterations are limited to 200ft² of site built glazing and dwelling units are limited to 250ft² or 5% of conditioned floor area. If the fenestration does not meet these conditions, the only options for determining fenestration values are NFRC Certification or the Default Tables in 110.6.
[3] Overhangs must extend past the left and right window the same distance as the depth of the overhang or greater to show an affect on the RSHGC. If an overhang does not meet this requirement, the affect of the overhang will be ignored.
[4]Projecting includes casement and awning windows.

Area-Weighted Average U-factor, SHGC, VT Compliance Calculation for Vertical Fenestration And Glazed Doors

01	02	03	04	05
Product Performance Unit	Total Area of Fenestration (ft²)	Area-weighted Calculation for Fenestration		Compliance Results Using Area-Weighted Calculation Option
		Required	Designed	
U-Factor	951	0.383	0.379	COMPLIES
(R)SHGC	951	0.222	0.221	COMPLIES
VT	951	0.32	0.5	COMPLIES

L. DAYLIGHT IN LARGE ENCLOSED SPACES

This section does not apply to this project.

STATE OF CALIFORNIA

Envelope Component Approach

CALIFORNIA ENERGY COMMISSION

CERTIFICATE OF COMPLIANCE		NRCC-ENV-E
Project Name: Perris Fire Station	**Report Page:**	(Page 31 of 34)
	Date Prepared:	11/26/2025

K. FENESTRATION AND GLAZED DOOR SCHEDULE

Vertical Fenestration And Glazed Doors- U-factor, Solar Heat Gain Coefficient (RSHGC/ SHGC), Visible Transmittance (VT)

04	05	06	07	08	09	10	11	12	13
Tag/Plan Detail ID	Fenestration Type	Occupancy & Status	U-factor/ (R)SHGC Compliance Method	VT Compliance Method	Calculation Method for Performance Values per Design[2]	Product Performance Unit	Required Product Performance	Product Performance per Design	Area ft²
Window	Fixed window	Nonresidential/ Relocatable 1 CZ: : New			NFRC Certified	U-factor (max)	0.36	0.36	70
					☐ Overhang/ Slats used for RSHGC	(R)SHGC (max)	0.25	0.22	
						VT (min)	0.42	0.5	
Window	Fixed window	Nonresidential/ Relocatable 1 CZ: : New			NFRC Certified	U-factor (max)	0.36	0.3	53
					☐ Overhang/ Slats used for RSHGC	(R)SHGC (max)	0.25	0.23	
						VT (min)	0.42	0.5	
Glass door	Fixed window	Nonresidential/ Relocatable 1 CZ: : New			NFRC Certified	U-factor (max)	0.36	0.36	24
					☐ Overhang/ Slats used for RSHGC	(R)SHGC (max)	0.25	0.22	
						VT (min)	0.42	0.5	
Window	Fixed window	Nonresidential/ Relocatable 1 CZ: : New			NFRC Certified	U-factor (max)	0.36	0.36	12
					☐ Overhang/ Slats used for RSHGC	(R)SHGC (max)	0.25	0.22	
						VT (min)	0.42	0.5	
Window	Fixed window	Nonresidential/ Relocatable 1 CZ: : New			NFRC Certified	U-factor (max)	0.36	0.36	12
					☐ Overhang/ Slats used for RSHGC	(R)SHGC (max)	0.25	0.22	
						VT (min)	0.42	0.5	
Window	Fixed window	Nonresidential/ Relocatable 1 CZ: : New			NFRC Certified	U-factor (max)	0.36	0.36	12
					☐ Overhang/ Slats used for RSHGC	(R)SHGC (max)	0.25	0.22	
						VT (min)	0.42	0.5	

STATE OF CALIFORNIA

Mechanical Systems

CALIFORNIA ENERGY COMMISSION

CERTIFICATE OF COMPLIANCE		NRCC-MCH-E
Project Name: Perris Fire Station	**Report Page:**	(Page 2 of 65)
	Date Prepared:	11/26/2025

C. COMPLIANCE RESULTS

Table C will indicate if the project data input into the compliance document is compliant with mechanical requirements. This table is not editable by the user. If this table says "DOES NOT COMPLY" or "COMPLIES with Exceptional Conditions" refer to Table D., or the table indicated as not compliant for guidance.

01		02		03		04		05		06		07		08	09
System Summary 110.1, 110.2, 140.4, 170.2(c)	AND	Pumps 140.4(k), 170.2(c)4I	AND	Fans/ Economizers 140.4(c), 140.4(e), 170.2(c)	AND	System Controls 110.2, 120.2, 140.4(f), 170.2(c)	AND	Ventilation 120.1, 160.2	AND	Terminal Box Controls 140.4(d), 170.2(c)4B	AND	Distribution 120.3, 140.4(l), 160.2, 160.3	AND	Cooling Towers 110.2(e)2	Compliance Results
(See Table F)		(See Table G)		(See Table H)		(See Table I)		(See Table J)		(See Table K)		(See Table L)		(See Table M)	
Yes	AND		AND	Yes	AND	Yes	AND	Yes	AND		AND	Yes	AND		COMPLIES
Mandatory Measures Compliance (See Table Q for Details)										COMPLIES					

D. EXCEPTIONAL CONDITIONS

This table is auto-filled with uneditable comments because of selections made or data entered in tables throughout the form.

E. ADDITIONAL REMARKS

This table includes remarks made by the permit applicant to the Authority Having Jurisdiction.

F. HVAC SYSTEM SUMMARY (DRY & WET SYSTEMS)

Space Conditioning System Information

01	02	03	04	05	06
System Name	Quantity	System Serving	System Status	Space Type	Utilizing Recovered Heat
CU/FC-1	1	Single zone	New/ Addition		☐
CU/FC-2	1	Single zone	New/ Addition		☐
CU/FC-3	1	Single zone	New/ Addition		☐
CU/FC-4	1	Single zone	New/ Addition		☐

STATE OF CALIFORNIA

Mechanical Systems

CALIFORNIA ENERGY COMMISSION

CERTIFICATE OF COMPLIANCE		NRCC-MCH-E
This document is used to demonstrate compliance for mechanical systems that are within the scope of the permit application and are demonstrating compliance using the prescriptive path outlined in 140.4, or 141.0(b)2 for alterations.		
Project Name: Perris Fire Station	**Report Page:**	(Page 1 of 65)
Project Address: 101 North D Street	**Date Prepared:**	11/26/2025

A. GENERAL INFORMATION

01	Project Location (city)	Perris	04	Total Conditioned Floor Area	9844
02	Climate Zone	10	05	Total Unconditioned Floor Area	5842
03	Occupancy Types Within Project:		06	# of Stories (Habitable Above Grade)	1

• Gymnasium • Hotel/Motel • Office • Parking Garage • Support Areas

B. PROJECT SCOPE

This table Includes mechanical systems or components that are within the scope of the permit application and are demonstrating compliance using the prescriptive path outlined in 140.4, 170.2(b) or 141.0(b)2 and 180.2(b)2 for alterations.

01	02	03
Air System(s)	Wet System Components	Dry System Components
☒ Heating Air System	☐ Water Economizer	☐ Air Economizer
☒ Cooling Air System	☐ Pumps	☐ Electric Resistance Heat
Mechanical Controls	☐ System Piping	☒ Fan Systems
☒ Mechanical Controls (existing to remain, altered or new)	☐ Cooling Towers	☒ Ductwork (existing to remain, altered or new)
	☐ Chillers	☒ Ventilation
	☐ Boilers	☐ Zonal Systems/ Terminal Boxes

STATE OF CALIFORNIA

Envelope Component Approach

CALIFORNIA ENERGY COMMISSION

CERTIFICATE OF COMPLIANCE		NRCC-ENV-E
Project Name: Perris Fire Station	**Report Page:**	(Page 34 of 34)
Project Address: 101 North D Street	**Date Prepared:**	11/26/2025

DOCUMENTATION AUTHOR'S DECLARATION STATEMENT

I certify that this Certificate of Compliance documentation is accurate and complete.

Documentation Author Name: Steve Johnson	Documentation Author Signature: Steven Johnson
Company: Design West Engineering	Signature Date: 2025-11-26
Address: 412 E. Vanderbilt Way	CEA/ HERS Certification Identification (if applicable): 33209
City/State/Zip: San Bernardino CA 92408	Phone: 909-890-3700

RESPONSIBLE PERSON'S DECLARATION STATEMENT

I certify the following under penalty of perjury, under the laws of the State of California:

1. The information provided on this Certificate of Compliance is true and correct.
2. I am eligible under Division 3 of the Business and Professions Code to accept responsibility for the building design or system design identified on this Certificate of Compliance (responsible designer)
3. The energy features and performance specifications, materials, components, and manufactured devices for the building design or system design identified on this Certificate of Compliance conform to the requirements of Title 24, Part 1 and Part 6 of the California Code of Regulations.
4. The building design features or system design features identified on this Certificate of Compliance are consistent with the information provided on other applicable compliance documents, worksheets, calculations, plans and specifications submitted to the enforcement agency for approval with this building permit application.
5. I will ensure that a completed signed copy of this Certificate of Compliance shall be made available with the building permit(s) issued for the building, and made available to the enforcement agency for all applicable inspections. I understand that a completed signed copy of this Certificate of Compliance is required to be included with the documentation the builder provides to the building owner at occupancy.

Responsible Designer Name:	Responsible Designer Signature:
Company: STK Architecture	Date Signed: 2025-11-26
Address: 42095 Zevo Dr.	License:
City/State/Zip: Temecula CA 92590	Phone: 951-296-9110

STK ARCHITECTURE, INC.

42095 ZEVO DR., TEMECULA, CALIFORNIA 92590-3780
Phone: 951.296.9110 Fax: 951.296.6079 Email: stk@stkinc.com

CONSULTANT:

REVIEWED FOR CODE COMPLIANCE

BUILDING BUREAU SOLUTIONS INC.

DESIGN WEST ENGINEERING
MECHANICAL • ELECTRICAL • ENERGY CONSULTANTS
412 E. Vanderbilt Way, San Bernardino, CA 92408
Email: code@designwesteng.com

REGISTERED PROFESSIONAL ENGINEER STEVEN M. JOHNSON No. 33209 SIGNED:04/15/2026 MECHANICAL STATE OF CALIFORNIA

PROJECT ADMINISTERED BY:
CITY OF PERRIS

101 NORTH "D" STREET
PERRIS, CA 92570

PROJECT NAME:
SOUTH FIRE STATION AND ADMINISTRATIVE BUILDING

PROJECT CIP: F077

2495 MURRIETA ROAD
PERRIS, CA 92585

ISSUE INFORMATION:

DATE:	INFORMATION:
11-26-25	95% CD SUBMITTAL
02-05-26	△1 1st PC RESPONSE
02-19-26	△2 2nd PC RESPONSE

SHEET INFORMATION:

STK PROJECT NO.:	365-03-25
SCALE:	AS NOTED
DATE:	NOVEMBER 2025
PLOT DATE:	–
DRAWN BY:	JG / JW

SEAL:

SHEET TITLE:
ENERGY COMPLIANCE DOCUMENTS

SHEET NO.:
M5.4

R:_PROJECT\2025\25-114 Perris Fire Station_CAD\25-114 M-ENV-sheets.dwg

04/14/2026 6:47PM

25-114

F. HVAC SYSTEM SUMMARY (DRY & WET SYSTEMS)

Space Conditioning System Information

01	02	03	04	05	06
System Name	Quantity	System Serving	System Status	Space Type	Utilizing Recovered Heat
CU/FC-5	1	Single zone	New/ Addition		☐
CU/FC-6	1	Single zone	New/ Addition		☐
CU/FC-7	1	Single zone	New/ Addition		☐
CU/FC-8	1	Single zone	New/ Addition		☐
CU/FC-9	1	Single zone	New/ Addition		☐
CU/FC-10	1	Single zone	New/ Addition		☐
CU/FC-11	1	Single zone	New/ Addition		☐
CU/FC-12	1	Single zone	New/ Addition		☐
CU/FC-13	1	Single zone	New/ Addition		☐
ERV-1	1	Single zone	New/ Addition		☐
CU/FC-1A	1	Single zone	New/ Addition		☐
CU/FC-2A	1	Single zone	New/ Addition		☐
CU/FC-3A	1	Single zone	New/ Addition		☐
CU/FC-4A	1	Single zone	New/ Addition		☐
CU/FC-5A	1	Single zone	New/ Addition		☐
ERV-2	1	Single zone	New/ Addition		☐

F. HVAC SYSTEM SUMMARY (DRY & WET SYSTEMS)

Dry System Equipment Sizing (includes air conditioners, condensers, heat pumps, VRF, furnaces and unit heaters and DOAS systems)

01	02	03	04	05	06	07	08	09	10	11
				Equipment Sizing per Mechanical Schedule (kBtu/h) 140.4(a&b), 170.2(c)1 & 170.2(c)2						
				Heating Output[2,3]			Cooling Output[2,3]		Load Calculations[3,4]	
Name or Item Tag	Equipment Category per Tables 110.2, 140.4(a)2 and 170.2(c)3aii	Equipment Type per Tables 110.2 and Title 20	Smallest Size Available[1] 140.4(a) and 170.2(c)1	Per Design (kBtu/h)	Rated (kBtu/h)	Supp. Heating Output (kBtu/h)	Sensible Per Design (kBtu/h)	Rated (kBtu/h)	Total Heating Load (kBtu/h)	Total Sensible Cooling Load (kBtu/h)
CU/FC-1	Unitary Heat Pumps	Air-cooled, split (1phase)	Yes	26.85	16.02	0	9.85	8.16	1.92	1.62
CU/FC-2	Unitary Heat Pumps	Air-cooled, split (1phase)	Yes	26.85	16.02	0	9.85	8.16	1.44	1.47
CU/FC-3	Unitary Heat Pumps	Air-cooled, split (1phase)	Yes	26.85	16.02	0	9.85	8.16	1.42	1.46
CU/FC-4	Unitary Heat Pumps	Air-cooled, split (1phase)	Yes	26.85	16.02	0	9.85	8.16	1.44	1.47
CU/FC-5	Unitary Heat Pumps	Air-cooled, split (1phase)	Yes	26.85	16.02	0	9.85	8.16	1.42	1.46
CU/FC-6	Unitary Heat Pumps	Air-cooled, split (1phase)	Yes	26.85	16.02	0	9.85	8.16	1.44	1.47
CU/FC-7	Unitary Heat Pumps	Air-cooled, split (1phase)	Yes	26.85	16.02	0	9.85	8.16	1.41	1.46
CU/FC-8	Unitary Heat Pumps	Air-cooled, split (1phase)	Yes	26.85	16.02	0	9.85	8.16	1.4	1.7
CU/FC-9	Unitary Heat Pumps	Air-cooled, split (1phase)	Yes	26.85	16.02	0	9.85	8.16	2.71	1.95
CU/FC-10	Unitary Heat Pumps	Air-cooled, split (1phase)	Yes	26.85	16.02	0	8.53	8.16	5.8	4.56
CU/FC-11	Unitary Heat Pumps	Air-cooled, split (3 phase)	Yes	92	54.9	0	24.8	29.31	8.93	28.02
CU/FC-12	Unitary Heat Pumps	Air-cooled, split (3 phase)	Yes	93.34	55.7	0	31.98	31.4	9.23	34.1
CU/FC-13	Unitary Heat Pumps	Air-cooled, split (3 phase)	Yes	93.34	55.7	0	35.38	36.36	10.12	19.91
ERV-1	Unitary AC/ Condensers	AC, air-cooled pkg (1 phase)	NA: Load Controls	0	0	0	0	0	175.57	99.04
CU/FC-1A	Unitary Heat Pumps	Air-cooled, split (3 phase)	Yes	93.34	55.7	0	30.04	27.49	9.78	19.34
CU/FC-2A	Unitary Heat Pumps	Air-cooled, split (3 phase)	Yes	69.21	41.3	0	22.7	23.28	7.91	22.45
CU/FC-3A	Unitary Heat Pumps	Air-cooled, split (3 phase)	Yes	93.34	55.7	0	25.2	27.7	11.25	32.92
CU/FC-4A	Unitary Heat Pumps	Air-cooled, split (3 phase)	Yes	93.34	55.7	0	34.28	33.11	6.81	27.99

F. HVAC SYSTEM SUMMARY (DRY & WET SYSTEMS)

Dry System Equipment Sizing (includes air conditioners, condensers, heat pumps, VRF, furnaces and unit heaters and DOAS systems)

01	02	03	04	05	06	07	08	09	10	11
CU/FC-5A	Unitary Heat Pumps	Air-cooled, split (3 phase)	Yes	93.34	55.7	0	32.46	32.02	13.79	32.3
ERV-2	Unitary AC/ Condensers	AC, air-cooled pkg (1 phase)	NA: Load Controls	0	0	0	0	0	219.46	123.8

[1]FOOTNOTES: Equipment shall be the smallest size, within the available options of the desired equipment line, necessary to meet the design heating and cooling loads of the building per 140.4(a) and 170.2(c)1. Healthcare facilities are excepted.
[2]It is common practice to show rated output capacity on the equipment schedule. Sensible cooling output comes from specification sheet tables.
[3] If equipment is heating only, leave cooling output and load blank. If equipment is cooling only, leave heating output and load blank.
[4] Authority Having Jurisdiction may ask for load calculations used for compliance per 140.4(b) and 170.2(c).

Dry System Equipment Efficiency (other than Package Terminal Air Conditioners (PTAC) and Package Terminal Heat Pumps (PTHP), DX-DOAS and Dual Fuel Heat Pumps)

01	02	03	04	05	06	07	08	09
		Heating Mode				Cooling Mode		
Name or Item Tag	Size Category (Btu/h)	Rating Condition (°F)	Efficiency Unit	Minimum Efficiency Required per Tables 110.2 / Title 20	Design Efficiency	Efficiency Unit	Minimum Efficiency Required per Tables 110.2 / Title 20	Design Efficiency
CU/FC-1	<65,000		HSPF2	7.5	10.5	SEER2	14.3	25
CU/FC-2	<65,000		HSPF2	7.5	10.5	SEER2	14.3	25
CU/FC-3	<65,000		HSPF2	7.5	10.5	SEER2	14.3	25
CU/FC-4	<65,000		HSPF2	7.5	10.5	SEER2	14.3	25
CU/FC-5	<65,000		HSPF2	7.5	10.5	SEER2	14.3	25
CU/FC-6	<65,000		HSPF2	7.5	10.5	SEER2	14.3	25
CU/FC-7	<65,000		HSPF2	7.5	10.5	SEER2	14.3	25
CU/FC-8	<65,000		HSPF2	7.5	10.5	SEER2	14.3	25
CU/FC-9	<65,000		HSPF2	7.5	10.5	SEER2	14.3	25
CU/FC-10	<65,000		HSPF2	7.5	10.5	SEER2	14.3	25
CU/FC-11	<65,000		HSPF2	7.5	10	SEER2	14.3	19

F. HVAC SYSTEM SUMMARY (DRY & WET SYSTEMS)

Dry System Equipment Efficiency (other than Package Terminal Air Conditioners (PTAC) and Package Terminal Heat Pumps (PTHP), DX-DOAS and Dual Fuel Heat Pumps)

01	02	03	04	05	06	07	08	09
		Heating Mode				Cooling Mode		
Name or Item Tag	Size Category (Btu/h)	Rating Condition (°F)	Efficiency Unit	Minimum Efficiency Required per Tables 110.2 / Title 20	Design Efficiency	Efficiency Unit	Minimum Efficiency Required per Tables 110.2 / Title 20	Design Efficiency
CU/FC-12	<65,000		HSPF2	7.5	10	SEER2	14.3	19
CU/FC-13	<65,000		HSPF2	7.5	10	SEER2	14.3	19
ERV-1	<65,000					SEER2	13.4	14
CU/FC-1A	<65,000		HSPF2	7.5	10	SEER2	14.3	19
CU/FC-2A	<65,000		HSPF2	7.5	7.5	SEER2	14.3	14.3
CU/FC-3A	<65,000		HSPF2	7.5	10	SEER2	14.3	19
CU/FC-4A	<65,000		HSPF2	7.5	10	SEER2	14.3	19
CU/FC-5A	<65,000		HSPF2	7.5	10	SEER2	14.3	19
ERV-2	<65,000					SEER2	13.4	14

G. PUMPS

This section does not apply to this project.

H. FAN SYSTEMS & AIR ECONOMIZERS

This table is used to demonstrate compliance with prescriptive requirements found in 140.4(c), 140.4(e), 140.4(m), 170.2(c)3, and 170.2(c)4A for fan systems. Fan systems serving only process loads are exempt from these requirements and do not need to be included in Table H.

System Name	CU/FC-1	Quantity	1	Fan System Status	New	System Zoning	all other systems	Serving Dwelling Units	Not Serving Dwelling Units	Fan System Airflow (cfm)	357	Site Elevation	1,470	Economizer	NA: <=33 kBtu/h cooling

01	02	03	04	05	06	07	08	09	10	11
						Allowance		Design		
Fan Name or Item Tag	Fan Type	Qty	Component	Airflow through Component (%)	Water Gauge (w.g)	Component Allowance	Fan Allowance (watt/cfm)[3]	Design Electrical Input Power Method	Motor Nameplate Horsepower	Design Electrical Input Power (kW)
SF	Supply	1	Base Allowance for system serving spaces <=6 floors away	100		83		Manufacturer provided		0.04
			MERV 13-16 Filter upstream of thermal conditioning equipment	100		50				
			Hydronic/DX cooling coil or heat pump coil	100		50				
Supply Fan Base Allowance (kW)			Exhuast/Return/Relief/Transfer Fan Base Allowance(kW)			Fan System Allowance (kW)[3]		1	Fan System Electrical Output (kW)	0.04

H. FAN SYSTEMS & AIR ECONOMIZERS

System Name	CU/FC-2	Quantity	1	Fan System Status	New	System Zoning	all other systems	Serving Dwelling Units	Not Serving Dwelling Units	Fan System Airflow (cfm)	357	Site Elevation	1,470	Economizer	NA: <=33 kBtu/h cooling

01	02	03	04	05	06	07	08	09	10	11
						Allowance		Design		
Fan Name or Item Tag	Fan Type	Qty	Component	Airflow through Component (%)	Water Gauge (w.g)	Component Allowance	Fan Allowance (watt/cfm)[3]	Design Electrical Input Power Method	Motor Nameplate Horsepower	Design Electrical Input Power (kW)
SF	Supply	1	Base Allowance for system serving spaces <=6 floors away	100		83		Manufacturer provided		0.04
			MERV 13-16 Filter upstream of thermal conditioning equipment	100		50				
			Hydronic/DX cooling coil or heat pump coil	100		50				
Supply Fan Base Allowance (kW)			Exhuast/Return/Relief/Transfer Fan Base Allowance(kW)			Fan System Allowance (kW)[3]		1	Fan System Electrical Output (kW)	0.04

H. FAN SYSTEMS & AIR ECONOMIZERS

System Name	CU/FC-3	Quantity	1	Fan System Status	New	System Zoning	all other systems	Serving Dwelling Units	Not Serving Dwelling Units	Fan System Airflow (cfm)	357	Site Elevation	1,470	Economizer	NA: <=33 kBtu/h cooling

01	02	03	04	05	06	07	08	09	10	11
						Allowance		Design		
Fan Name or Item Tag	Fan Type	Qty	Component	Airflow through Component (%)	Water Gauge (w.g)	Component Allowance	Fan Allowance (watt/cfm)[3]	Design Electrical Input Power Method	Motor Nameplate Horsepower	Design Electrical Input Power (kW)
SF	Supply	1	Base Allowance for system serving spaces <=6 floors away	100		83		Manufacturer provided		0.04
			MERV 13-16 Filter upstream of thermal conditioning equipment	100		50				
			Hydronic/DX cooling coil or heat pump coil	100		50				
Supply Fan Base Allowance (kW)			Exhuast/Return/Relief/Transfer Fan Base Allowance(kW)			Fan System Allowance (kW)[3]		1	Fan System Electrical Output (kW)	0.04

H. FAN SYSTEMS & AIR ECONOMIZERS

System Name	CU/FC-4	Quantity	1	Fan System Status	New	System Zoning	all other systems	Serving Dwelling Units	Not Serving Dwelling Units	Fan System Airflow (cfm)	357	Site Elevation	1,470	Economizer	NA: <=33 kBtu/h cooling

01	02	03	04	05	06	07	08	09	10	11
						Allowance		Design		
Fan Name or Item Tag	Fan Type	Qty	Component	Airflow through Component (%)	Water Gauge (w.g)	Component Allowance	Fan Allowance (watt/cfm)[3]	Design Electrical Input Power Method	Motor Nameplate Horsepower	Design Electrical Input Power (kW)
SF	Supply	1	Base Allowance for system serving spaces <=6 floors away	100		83		Manufacturer provided		0.04
			MERV 13-16 Filter upstream of thermal conditioning equipment	100		50				
			Hydronic/DX cooling coil or heat pump coil	100		50				
Supply Fan Base Allowance (kW)			Exhuast/Return/Relief/Transfer Fan Base Allowance(kW)			Fan System Allowance (kW)[3]		1	Fan System Electrical Output (kW)	0.04

H. FAN SYSTEMS & AIR ECONOMIZERS

System Name	CU/FC-5	Quantity	1	Fan System Status	New	System Zoning	all other systems	Serving Dwelling Units	Not Serving Dwelling Units	Fan System Airflow (cfm)	357	Site Elevation	1,470	Economizer	NA: <=33 kBtu/h cooling

01	02	03	04	05	06	07	08	09	10	11
						Allowance		Design		
Fan Name or Item Tag	Fan Type	Qty	Component	Airflow through Component (%)	Water Gauge (w.g)	Component Allowance	Fan Allowance (watt/cfm)[3]	Design Electrical Input Power Method	Motor Nameplate Horsepower	Design Electrical Input Power (kW)
SF	Supply	1	Base Allowance for system serving spaces <=6 floors away	100		83		Manufacturer provided		0.04
			MERV 13-16 Filter upstream of thermal conditioning equipment	100		50				
			Hydronic/DX cooling coil or heat pump coil	100		50				
Supply Fan Base Allowance (kW)			Exhuast/Return/Relief/Transfer Fan Base Allowance(kW)			Fan System Allowance (kW)[3]		1	Fan System Electrical Output (kW)	0.04

STK ARCHITECTURE, INC.
42095 ZEVO DR., TEMECULA, CALIFORNIA 92590-3780
Phone: 951.296.9110 Fax: 951.296.6079 Email: stk@stkinc.com

CONSULTANT:

REVIEWED FOR CODE COMPLIANCE

DESIGN WEST ENGINEERING
MECHANICAL • ELECTRICAL • ENERGY CONSULTANTS

BUILDING BUREAU SOLUTIONS INC.

REGISTERED PROFESSIONAL ENGINEER — STEVEN M. JOHNSON — No. 33209 — SIGNED:04/15/2026 — MECHANICAL — STATE OF CALIFORNIA

PROJECT ADMINISTERED BY:
CITY OF PERRIS

101 NORTH "D" STREET
PERRIS, CA 92570

PROJECT NAME:
SOUTH FIRE STATION AND ADMINISTRATIVE BUILDING

PROJECT CIP: F077

2495 MURRIETA ROAD
PERRIS, CA 92585

ISSUE INFORMATION:

DATE:	INFORMATION:
11-26-25	95% CD SUBMITTAL
02-05-26	△1 1st PC RESPONSE
02-19-26	△2 2nd PC RESPONSE

SHEET INFORMATION:
STK PROJECT NO.: 365-03-25
SCALE: AS NOTED
DATE: NOVEMBER 2025
PLOT DATE: –
DRAWN BY: JG / JW

SEAL:

SHEET TITLE:
ENERGY COMPLIANCE DOCUMENTS

SHEET NO.:
M5.5

25-114

R:_PROJECT\2025\25-114 Perris Fire Station_CAD\25-114 M-ENV-sheets.dwg
04/14/2026 6:47PM

STATE OF CALIFORNIA
Mechanical Systems
CALIFORNIA ENERGY COMMISSION

CERTIFICATE OF COMPLIANCE			NRCC-MCH-E
Project Name:	Perris Fire Station	**Report Page:**	(Page 14 of 65)
		Date Prepared:	11/26/2025

H. FAN SYSTEMS & AIR ECONOMIZERS

System Name	CU/FC-8	Quantity	1	Fan System Status	New	System Zoning	all other systems	Serving Dwelling Units	Not Serving Dwelling Units	Fan System Airflow (cfm)	357	Site Elevation	1,470	Economizer	NA: <=33 kBtu/h cooling
01	02	03	04			05		06	07	08	09			10	11

Fan Name or Item Tag	Fan Type	Qty	Component	Airflow through Component (%)	Water Gauge (w.g)	Allowance: Component Allowance	Allowance: Fan Allowance (watt/cfm)[3]	Design: Design Electrical Input Power Method	Design: Motor Nameplate Horsepower	Design: Design Electrical Input Power (kW)
SF	Supply	1	Base Allowance for system serving spaces <=6 floors away	100		83		Manufacturer provided		0.04
			MERV 13-16 Filter upstream of thermal conditioning equipment	100		50				
			Hydronic/DX cooling coil or heat pump coil	100		50				
Supply Fan Base Allowance (kW)			Exhuast/Return/Relief/Transfer Fan Base Allowance(kW)			Fan System Allowance (kW)[3]		1	Fan System Electrical Output (kW)	0.04

Generated Date/Time: Documentation Software: EnergyPro

CA Building Energy Efficiency Standards - 2022 Nonresidential Compliance
Report Version: 2022.0.000
Schema Version: rev 20220101
Compliance ID: EnergyPro-4473-1125-5278
Report Generated: 2025-11-26 09:26:47

STATE OF CALIFORNIA
Mechanical Systems
CALIFORNIA ENERGY COMMISSION

CERTIFICATE OF COMPLIANCE			NRCC-MCH-E
Project Name:	Perris Fire Station	**Report Page:**	(Page 13 of 65)
		Date Prepared:	11/26/2025

H. FAN SYSTEMS & AIR ECONOMIZERS

System Name	CU/FC-7	Quantity	1	Fan System Status	New	System Zoning	all other systems	Serving Dwelling Units	Not Serving Dwelling Units	Fan System Airflow (cfm)	357	Site Elevation	1,470	Economizer	NA: <=33 kBtu/h cooling
01	02	03	04			05		06	07	08	09			10	11

Fan Name or Item Tag	Fan Type	Qty	Component	Airflow through Component (%)	Water Gauge (w.g)	Allowance: Component Allowance	Allowance: Fan Allowance (watt/cfm)[3]	Design: Design Electrical Input Power Method	Design: Motor Nameplate Horsepower	Design: Design Electrical Input Power (kW)
SF	Supply	1	Base Allowance for system serving spaces <=6 floors away	100		83		Manufacturer provided		0.04
			MERV 13-16 Filter upstream of thermal conditioning equipment	100		50				
			Hydronic/DX cooling coil or heat pump coil	100		50				
Supply Fan Base Allowance (kW)			Exhuast/Return/Relief/Transfer Fan Base Allowance(kW)			Fan System Allowance (kW)[3]		1	Fan System Electrical Output (kW)	0.04

Generated Date/Time: Documentation Software: EnergyPro

CA Building Energy Efficiency Standards - 2022 Nonresidential Compliance
Report Version: 2022.0.000
Schema Version: rev 20220101
Compliance ID: EnergyPro-4473-1125-5278
Report Generated: 2025-11-26 09:26:47

STATE OF CALIFORNIA
Mechanical Systems
CALIFORNIA ENERGY COMMISSION

CERTIFICATE OF COMPLIANCE			NRCC-MCH-E
Project Name:	Perris Fire Station	**Report Page:**	(Page 12 of 65)
		Date Prepared:	11/26/2025

H. FAN SYSTEMS & AIR ECONOMIZERS

System Name	CU/FC-6	Quantity	1	Fan System Status	New	System Zoning	all other systems	Serving Dwelling Units	Not Serving Dwelling Units	Fan System Airflow (cfm)	357	Site Elevation	1,470	Economizer	NA: <=33 kBtu/h cooling
01	02	03	04			05		06	07	08	09			10	11

Fan Name or Item Tag	Fan Type	Qty	Component	Airflow through Component (%)	Water Gauge (w.g)	Allowance: Component Allowance	Allowance: Fan Allowance (watt/cfm)[3]	Design: Design Electrical Input Power Method	Design: Motor Nameplate Horsepower	Design: Design Electrical Input Power (kW)
SF	Supply	1	Base Allowance for system serving spaces <=6 floors away	100		83		Manufacturer provided		0.04
			MERV 13-16 Filter upstream of thermal conditioning equipment	100		50				
			Hydronic/DX cooling coil or heat pump coil	100		50				
Supply Fan Base Allowance (kW)			Exhuast/Return/Relief/Transfer Fan Base Allowance(kW)			Fan System Allowance (kW)[3]		1	Fan System Electrical Output (kW)	0.04

Generated Date/Time: Documentation Software: EnergyPro

CA Building Energy Efficiency Standards - 2022 Nonresidential Compliance
Report Version: 2022.0.000
Schema Version: rev 20220101
Compliance ID: EnergyPro-4473-1125-5278
Report Generated: 2025-11-26 09:26:47

STATE OF CALIFORNIA
Mechanical Systems
CALIFORNIA ENERGY COMMISSION

CERTIFICATE OF COMPLIANCE			NRCC-MCH-E
Project Name:	Perris Fire Station	**Report Page:**	(Page 17 of 65)
		Date Prepared:	11/26/2025

H. FAN SYSTEMS & AIR ECONOMIZERS

System Name	CU/FC-11	Quantity	1	Fan System Status	New	System Zoning	all other systems	Serving Dwelling Units	Not Serving Dwelling Units	Fan System Airflow (cfm)	1,409	Site Elevation	1,470	Economizer	NA: Special OA filtration
01	02	03	04			05		06	07	08	09			10	11

Fan Name or Item Tag	Fan Type	Qty	Component	Airflow through Component (%)	Water Gauge (w.g)	Allowance: Component Allowance	Allowance: Fan Allowance (watt/cfm)[3]	Design: Design Electrical Input Power Method	Design: Motor Nameplate Horsepower	Design: Design Electrical Input Power (kW)
SF	Supply	1	Base Allowance for system serving spaces <=6 floors away	100		327		Manufacturer provided		0.25
			MERV 13-16 Filter upstream of thermal conditioning equipment	100		196				
			Hydronic/DX cooling coil or heat pump coil	100		196				
Supply Fan Base Allowance (kW)			Exhuast/Return/Relief/Transfer Fan Base Allowance(kW)			Fan System Allowance (kW)[3]		1	Fan System Electrical Output (kW)	0.25

Generated Date/Time: Documentation Software: EnergyPro

CA Building Energy Efficiency Standards - 2022 Nonresidential Compliance
Report Version: 2022.0.000
Schema Version: rev 20220101
Compliance ID: EnergyPro-4473-1125-5278
Report Generated: 2025-11-26 09:26:47

STATE OF CALIFORNIA
Mechanical Systems
CALIFORNIA ENERGY COMMISSION

CERTIFICATE OF COMPLIANCE			NRCC-MCH-E
Project Name:	Perris Fire Station	**Report Page:**	(Page 16 of 65)
		Date Prepared:	11/26/2025

H. FAN SYSTEMS & AIR ECONOMIZERS

System Name	CU/FC-10	Quantity	1	Fan System Status	New	System Zoning	all other systems	Serving Dwelling Units	Not Serving Dwelling Units	Fan System Airflow (cfm)	357	Site Elevation	1,470	Economizer	NA: <=33 kBtu/h cooling
01	02	03	04			05		06	07	08	09			10	11

Fan Name or Item Tag	Fan Type	Qty	Component	Airflow through Component (%)	Water Gauge (w.g)	Allowance: Component Allowance	Allowance: Fan Allowance (watt/cfm)[3]	Design: Design Electrical Input Power Method	Design: Motor Nameplate Horsepower	Design: Design Electrical Input Power (kW)
SF	Supply	1	Base Allowance for system serving spaces <=6 floors away	100		83		Manufacturer provided		0.04
			MERV 13-16 Filter upstream of thermal conditioning equipment	100		50				
			Hydronic/DX cooling coil or heat pump coil	100		50				
Supply Fan Base Allowance (kW)			Exhuast/Return/Relief/Transfer Fan Base Allowance(kW)			Fan System Allowance (kW)[3]		1	Fan System Electrical Output (kW)	0.04

Generated Date/Time: Documentation Software: EnergyPro

CA Building Energy Efficiency Standards - 2022 Nonresidential Compliance
Report Version: 2022.0.000
Schema Version: rev 20220101
Compliance ID: EnergyPro-4473-1125-5278
Report Generated: 2025-11-26 09:26:47

STATE OF CALIFORNIA
Mechanical Systems
CALIFORNIA ENERGY COMMISSION

CERTIFICATE OF COMPLIANCE			NRCC-MCH-E
Project Name:	Perris Fire Station	**Report Page:**	(Page 15 of 65)
		Date Prepared:	11/26/2025

H. FAN SYSTEMS & AIR ECONOMIZERS

System Name	CU/FC-9	Quantity	1	Fan System Status	New	System Zoning	all other systems	Serving Dwelling Units	Not Serving Dwelling Units	Fan System Airflow (cfm)	357	Site Elevation	1,470	Economizer	NA: <=33 kBtu/h cooling
01	02	03	04			05		06	07	08	09			10	11

Fan Name or Item Tag	Fan Type	Qty	Component	Airflow through Component (%)	Water Gauge (w.g)	Allowance: Component Allowance	Allowance: Fan Allowance (watt/cfm)[3]	Design: Design Electrical Input Power Method	Design: Motor Nameplate Horsepower	Design: Design Electrical Input Power (kW)
SF	Supply	1	Base Allowance for system serving spaces <=6 floors away	100		83		Manufacturer provided		0.04
			MERV 13-16 Filter upstream of thermal conditioning equipment	100		50				
			Hydronic/DX cooling coil or heat pump coil	100		50				
Supply Fan Base Allowance (kW)			Exhuast/Return/Relief/Transfer Fan Base Allowance(kW)			Fan System Allowance (kW)[3]		1	Fan System Electrical Output (kW)	0.04

Generated Date/Time: Documentation Software: EnergyPro

CA Building Energy Efficiency Standards - 2022 Nonresidential Compliance
Report Version: 2022.0.000
Schema Version: rev 20220101
Compliance ID: EnergyPro-4473-1125-5278
Report Generated: 2025-11-26 09:26:47

STATE OF CALIFORNIA
Mechanical Systems
CALIFORNIA ENERGY COMMISSION

CERTIFICATE OF COMPLIANCE			NRCC-MCH-E
Project Name:	Perris Fire Station	**Report Page:**	(Page 20 of 65)
		Date Prepared:	11/26/2025

H. FAN SYSTEMS & AIR ECONOMIZERS

System Name	ERV-1	Quantity	1	Fan System Status	New	System Zoning	all other systems	Serving Dwelling Units	Not Serving Dwelling Units	Fan System Airflow (cfm)	1,600	Site Elevation	1,470	Economizer	NA: <=33 kBtu/h cooling
01	02	03	04			05		06	07	08	09			10	11

Fan Name or Item Tag	Fan Type	Qty	Component	Airflow through Component (%)	Water Gauge (w.g)	Allowance: Component Allowance	Allowance: Fan Allowance (watt/cfm)[3]	Design: Design Electrical Input Power Method	Design: Motor Nameplate Horsepower	Design: Design Electrical Input Power (kW)
SF	Supply	1	Base Allowance for system serving spaces <=6 floors away	100		371		Manufacturer provided		0.5
			MERV 13-16 Filter upstream of thermal conditioning equipment	100		222				
			Hydronic/DX cooling coil or heat pump coil	100		222				
			100% outdoor air system	100		112				
			Energy Recovery 0.70 <= ERR > 0.75	100		384				
RF	Return	1	Exhaust System Base Allowance	100		186		Manufacturer provided		0.5
			Energy Recovery 0.70 <= ERR > 0.75	100		241				
Supply Fan Base Allowance (kW)			Exhuast/Return/Relief/Transfer Fan Base Allowance(kW)			Fan System Allowance (kW)[3]		1.74	Fan System Electrical Output (kW)	1

Generated Date/Time: Documentation Software: EnergyPro

CA Building Energy Efficiency Standards - 2022 Nonresidential Compliance
Report Version: 2022.0.000
Schema Version: rev 20220101
Compliance ID: EnergyPro-4473-1125-5278
Report Generated: 2025-11-26 09:26:47

STATE OF CALIFORNIA
Mechanical Systems
CALIFORNIA ENERGY COMMISSION

CERTIFICATE OF COMPLIANCE			NRCC-MCH-E
Project Name:	Perris Fire Station	**Report Page:**	(Page 19 of 65)
		Date Prepared:	11/26/2025

H. FAN SYSTEMS & AIR ECONOMIZERS

System Name	CU/FC-13	Quantity	1	Fan System Status	New	System Zoning	all other systems	Serving Dwelling Units	Not Serving Dwelling Units	Fan System Airflow (cfm)	1,409	Site Elevation	1,470	Economizer	NA: Special OA filtration
01	02	03	04			05		06	07	08	09			10	11

Fan Name or Item Tag	Fan Type	Qty	Component	Airflow through Component (%)	Water Gauge (w.g)	Allowance: Component Allowance	Allowance: Fan Allowance (watt/cfm)[3]	Design: Design Electrical Input Power Method	Design: Motor Nameplate Horsepower	Design: Design Electrical Input Power (kW)
SF	Supply	1	Base Allowance for system serving spaces <=6 floors away	100		327		Manufacturer provided		0.25
			MERV 13-16 Filter upstream of thermal conditioning equipment	100		196				
			Hydronic/DX cooling coil or heat pump coil	100		196				
Supply Fan Base Allowance (kW)			Exhuast/Return/Relief/Transfer Fan Base Allowance(kW)			Fan System Allowance (kW)[3]		1	Fan System Electrical Output (kW)	0.25

Generated Date/Time: Documentation Software: EnergyPro

CA Building Energy Efficiency Standards - 2022 Nonresidential Compliance
Report Version: 2022.0.000
Schema Version: rev 20220101
Compliance ID: EnergyPro-4473-1125-5278
Report Generated: 2025-11-26 09:26:47

STATE OF CALIFORNIA
Mechanical Systems
CALIFORNIA ENERGY COMMISSION

CERTIFICATE OF COMPLIANCE			NRCC-MCH-E
Project Name:	Perris Fire Station	**Report Page:**	(Page 18 of 65)
		Date Prepared:	11/26/2025

H. FAN SYSTEMS & AIR ECONOMIZERS

System Name	CU/FC-12	Quantity	1	Fan System Status	New	System Zoning	all other systems	Serving Dwelling Units	Not Serving Dwelling Units	Fan System Airflow (cfm)	1,409	Site Elevation	1,470	Economizer	NA: Special OA filtration
01	02	03	04			05		06	07	08	09			10	11

Fan Name or Item Tag	Fan Type	Qty	Component	Airflow through Component (%)	Water Gauge (w.g)	Allowance: Component Allowance	Allowance: Fan Allowance (watt/cfm)[3]	Design: Design Electrical Input Power Method	Design: Motor Nameplate Horsepower	Design: Design Electrical Input Power (kW)
SF	Supply	1	Base Allowance for system serving spaces <=6 floors away	100		327		Manufacturer provided		0.25
			MERV 13-16 Filter upstream of thermal conditioning equipment	100		196				
			Hydronic/DX cooling coil or heat pump coil	100		196				
Supply Fan Base Allowance (kW)			Exhuast/Return/Relief/Transfer Fan Base Allowance(kW)			Fan System Allowance (kW)[3]		1	Fan System Electrical Output (kW)	0.25

Generated Date/Time: Documentation Software: EnergyPro

CA Building Energy Efficiency Standards - 2022 Nonresidential Compliance
Report Version: 2022.0.000
Schema Version: rev 20220101
Compliance ID: EnergyPro-4473-1125-5278
Report Generated: 2025-11-26 09:26:47

STK ARCHITECTURE, INC.
42095 ZEVO DR., TEMECULA, CALIFORNIA 92590-3780
Phone: 951.296.9110 Fax: 951.296.6079 Email: stk@stkinc.com

CONSULTANT:

REVIEWED FOR CODE COMPLIANCE

BUILDING BUREAU SOLUTIONS INC.

DESIGN WEST ENGINEERING
MECHANICAL • ELECTRICAL • ENERGY CONSULTANTS
Email: code@designwesteng.com

REGISTERED PROFESSIONAL ENGINEER
STEVEN M. JOHNSON
No. 33209
SIGNED:04/15/2026
MECHANICAL
STATE OF CALIFORNIA

PROJECT ADMINISTERED BY:

CITY OF PERRIS

101 NORTH "D" STREET
PERRIS, CA 92570

PROJECT NAME:

SOUTH FIRE STATION AND ADMINISTRATIVE BUILDING

PROJECT CIP: F077

2495 MURRIETA ROAD
PERRIS, CA 92585

ISSUE INFORMATION:

DATE:	INFORMATION:
11-26-25	95% CD SUBMITTAL
02-05-26	1 1st PC RESPONSE
02-19-26	2 2nd PC RESPONSE

SHEET INFORMATION:

STK PROJECT NO.:	365-03-25
SCALE:	AS NOTED
DATE:	NOVEMBER 2025
PLOT DATE:	–
DRAWN BY:	JG / JW

SEAL:

SHEET TITLE:

ENERGY COMPLIANCE DOCUMENTS

SHEET NO.:

M5.6

25-114

R:_PROJECT\2025\25-114 Perris Fire Station_CAD\25-114 M-ENV-sheets.dwg
04/14/2026 6:47PM

STATE OF CALIFORNIA
Mechanical Systems CALIFORNIA ENERGY COMMISSION

CERTIFICATE OF COMPLIANCE		NRCC-MCH-E
Project Name: Perris Fire Station	Report Page:	(Page 23 of 65)
	Date Prepared:	11/26/2025

H. FAN SYSTEMS & AIR ECONOMIZERS

System Name	CU/FC-3A	Quantity	1	Fan System Status	New	System Zoning	all other systems	Serving Dwelling Units	Not Serving Dwelling Units	Fan System Airflow (cfm)	1,409	Site Elevation	1,470	Economizer	NA: Special OA filtration

01	02	03	04	05	06	07	08	09	10	11
						Allowance		Design		
Fan Name or Item Tag	Fan Type	Qty	Component	Airflow through Component (%)	Water Gauge (w.g)	Component Allowance	Fan Allowance (watt/cfm)[3]	Design Electrical Input Power Method	Motor Nameplate Horsepower	Design Electrical Input Power (kW)
SF	Supply	1	Base Allowance for system serving spaces <=6 floors away	100		327		Manufacturer provided		0.25
			MERV 13-16 Filter upstream of thermal conditioning equipment	100		196				
			Hydronic/DX cooling coil or heat pump coil	100		196				
Supply Fan Base Allowance (kW)		Exhuast/Return/Relief/Transfer Fan Base Allowance(kW)			Fan System Allowance (kW)[3]	1	Fan System Electrical Output (kW)			0.25

STATE OF CALIFORNIA
Mechanical Systems CALIFORNIA ENERGY COMMISSION

CERTIFICATE OF COMPLIANCE		NRCC-MCH-E
Project Name: Perris Fire Station	Report Page:	(Page 22 of 65)
	Date Prepared:	11/26/2025

H. FAN SYSTEMS & AIR ECONOMIZERS

System Name	CU/FC-2A	Quantity	1	Fan System Status	New	System Zoning	all other systems	Serving Dwelling Units	Not Serving Dwelling Units	Fan System Airflow (cfm)	1,050	Site Elevation	1,470	Economizer	NA: <=33 kBtu/h cooling

01	02	03	04	05	06	07	08	09	10	11
						Allowance		Design		
Fan Name or Item Tag	Fan Type	Qty	Component	Airflow through Component (%)	Water Gauge (w.g)	Component Allowance	Fan Allowance (watt/cfm)[3]	Design Electrical Input Power Method	Motor Nameplate Horsepower	Design Electrical Input Power (kW)
SF	Supply	1	Base Allowance for system serving spaces <=6 floors away	100		244		Manufacturer provided		0.25
			MERV 13-16 Filter upstream of thermal conditioning equipment	100		146				
			Hydronic/DX cooling coil or heat pump coil	100		146				
Supply Fan Base Allowance (kW)		Exhuast/Return/Relief/Transfer Fan Base Allowance(kW)			Fan System Allowance (kW)[3]	1	Fan System Electrical Output (kW)			0.25

STATE OF CALIFORNIA
Mechanical Systems CALIFORNIA ENERGY COMMISSION

CERTIFICATE OF COMPLIANCE		NRCC-MCH-E
Project Name: Perris Fire Station	Report Page:	(Page 21 of 65)
	Date Prepared:	11/26/2025

H. FAN SYSTEMS & AIR ECONOMIZERS

System Name	CU/FC-1A	Quantity	1	Fan System Status	New	System Zoning	all other systems	Serving Dwelling Units	Not Serving Dwelling Units	Fan System Airflow (cfm)	1,409	Site Elevation	1,470	Economizer	NA: Special OA filtration

01	02	03	04	05	06	07	08	09	10	11
						Allowance		Design		
Fan Name or Item Tag	Fan Type	Qty	Component	Airflow through Component (%)	Water Gauge (w.g)	Component Allowance	Fan Allowance (watt/cfm)[3]	Design Electrical Input Power Method	Motor Nameplate Horsepower	Design Electrical Input Power (kW)
SF	Supply	1	Base Allowance for system serving spaces <=6 floors away	100		327		Manufacturer provided		0.25
			MERV 13-16 Filter upstream of thermal conditioning equipment	100		196				
			Hydronic/DX cooling coil or heat pump coil	100		196				
Supply Fan Base Allowance (kW)		Exhuast/Return/Relief/Transfer Fan Base Allowance(kW)			Fan System Allowance (kW)[3]	1	Fan System Electrical Output (kW)			0.25

STATE OF CALIFORNIA
Mechanical Systems CALIFORNIA ENERGY COMMISSION

CERTIFICATE OF COMPLIANCE		NRCC-MCH-E
Project Name: Perris Fire Station	Report Page:	(Page 26 of 65)
	Date Prepared:	11/26/2025

H. FAN SYSTEMS & AIR ECONOMIZERS

System Name	ERV-2	Quantity	1	Fan System Status	New	System Zoning	all other systems	Serving Dwelling Units	Not Serving Dwelling Units	Fan System Airflow (cfm)	2,000	Site Elevation	1,470	Economizer	NA: <=33 kBtu/h cooling

01	02	03	04	05	06	07	08	09	10	11
						Allowance		Design		
Fan Name or Item Tag	Fan Type	Qty	Component	Airflow through Component (%)	Water Gauge (w.g)	Component Allowance	Fan Allowance (watt/cfm)[3]	Design Electrical Input Power Method	Motor Nameplate Horsepower	Design Electrical Input Power (kW)
SF	Supply	1	Base Allowance for system serving spaces <=6 floors away	100		464		Manufacturer provided		1.14
			MERV 13-16 Filter upstream of thermal conditioning equipment	100		278				
			Hydronic/DX cooling coil or heat pump coil	100		278				
			100% outdoor air system	100		140				
			Energy Recovery 0.70 <= ERR > 0.75	100		480				
RF	Return	1	Exhaust System Base Allowance	100		298		Manufacturer provided		1.13
			Energy Recovery 0.70 <= ERR > 0.75	100		386				
Supply Fan Base Allowance (kW)		Exhuast/Return/Relief/Transfer Fan Base Allowance(kW)			Fan System Allowance (kW)[3]	2.32	Fan System Electrical Output (kW)			2.27

[1] FOOTNOTES: Fans serving spaces with design background noise goals below NC35
[2] Low-turndown single-zone VAV fan system must be capable of and configured to reduce airflow to 50 percent of design airflow and use no more than 30 percent of the design wattage at that airflow. No more than 10 percent of the design load served by the equipment shall have fixed loads.
[3] Fan system allowance includes fan system base allowance.
[4] Filter pressure loss can only be counted once per fan system.

STATE OF CALIFORNIA
Mechanical Systems CALIFORNIA ENERGY COMMISSION

CERTIFICATE OF COMPLIANCE		NRCC-MCH-E
Project Name: Perris Fire Station	Report Page:	(Page 25 of 65)
	Date Prepared:	11/26/2025

H. FAN SYSTEMS & AIR ECONOMIZERS

System Name	CU/FC-5A	Quantity	1	Fan System Status	New	System Zoning	all other systems	Serving Dwelling Units	Not Serving Dwelling Units	Fan System Airflow (cfm)	1,409	Site Elevation	1,470	Economizer	NA: Special OA filtration

01	02	03	04	05	06	07	08	09	10	11
						Allowance		Design		
Fan Name or Item Tag	Fan Type	Qty	Component	Airflow through Component (%)	Water Gauge (w.g)	Component Allowance	Fan Allowance (watt/cfm)[3]	Design Electrical Input Power Method	Motor Nameplate Horsepower	Design Electrical Input Power (kW)
SF	Supply	1	Base Allowance for system serving spaces <=6 floors away	100		327		Manufacturer provided		0.25
			MERV 13-16 Filter upstream of thermal conditioning equipment	100		196				
			Hydronic/DX cooling coil or heat pump coil	100		196				
Supply Fan Base Allowance (kW)		Exhuast/Return/Relief/Transfer Fan Base Allowance(kW)			Fan System Allowance (kW)[3]	1	Fan System Electrical Output (kW)			0.25

STATE OF CALIFORNIA
Mechanical Systems CALIFORNIA ENERGY COMMISSION

CERTIFICATE OF COMPLIANCE		NRCC-MCH-E
Project Name: Perris Fire Station	Report Page:	(Page 24 of 65)
	Date Prepared:	11/26/2025

H. FAN SYSTEMS & AIR ECONOMIZERS

System Name	CU/FC-4A	Quantity	1	Fan System Status	New	System Zoning	all other systems	Serving Dwelling Units	Not Serving Dwelling Units	Fan System Airflow (cfm)	1,409	Site Elevation	1,470	Economizer	NA: Special OA filtration

01	02	03	04	05	06	07	08	09	10	11
						Allowance		Design		
Fan Name or Item Tag	Fan Type	Qty	Component	Airflow through Component (%)	Water Gauge (w.g)	Component Allowance	Fan Allowance (watt/cfm)[3]	Design Electrical Input Power Method	Motor Nameplate Horsepower	Design Electrical Input Power (kW)
SF	Supply	1	Base Allowance for system serving spaces <=6 floors away	100		327		Manufacturer provided		0.25
			MERV 13-16 Filter upstream of thermal conditioning equipment	100		196				
			Hydronic/DX cooling coil or heat pump coil	100		196				
Supply Fan Base Allowance (kW)		Exhuast/Return/Relief/Transfer Fan Base Allowance(kW)			Fan System Allowance (kW)[3]	1	Fan System Electrical Output (kW)			0.25

STATE OF CALIFORNIA
Mechanical Systems CALIFORNIA ENERGY COMMISSION

CERTIFICATE OF COMPLIANCE		NRCC-MCH-E
Project Name: Perris Fire Station	Report Page:	(Page 29 of 65)
	Date Prepared:	11/26/2025

I. SYSTEM CONTROLS

CU/FC-6	Single zone	<= 25,000 ft^2	Setback	Auto Timer Switch	4 Hour Timer	EMCS	NA: Would increase energy use	Provided
CU/FC-7	Single zone	<= 25,000 ft^2	Setback	Auto Timer Switch	4 Hour Timer	EMCS	NA: Would increase energy use	Provided
CU/FC-8	Single zone	<= 25,000 ft^2	Setback	Auto Timer Switch	4 Hour Timer	EMCS	NA: Would increase energy use	Provided
CU/FC-9	Single zone	<= 25,000 ft^2	Setback	Auto Timer Switch	4 Hour Timer	EMCS	NA: Would increase energy use	Provided
CU/FC-10	Single zone	<= 25,000 ft^2	Setback	Auto Timer Switch	4 Hour Timer	EMCS	NA: Would increase energy use	Provided
CU/FC-11	Single zone	<= 25,000 ft^2	Setback	Auto Timer Switch	4 Hour Timer	EMCS	NA: Would increase energy use	Provided
CU/FC-12	Single zone	<= 25,000 ft^2	Setback	Auto Timer Switch	4 Hour Timer	EMCS	NA: Would increase energy use	Provided
CU/FC-13	Single zone	<= 25,000 ft^2	Setback	Auto Timer Switch	4 Hour Timer	EMCS	NA: Would increase energy use	Provided
CU/FC-1A	Single zone	<= 25,000 ft^2	Setback	Auto Timer Switch	4 Hour Timer	EMCS	NA: Would increase energy use	Provided
CU/FC-2A	Single zone	<= 25,000 ft^2	Setback	Auto Timer Switch	4 Hour Timer	EMCS	NA: Would increase energy use	Provided

STATE OF CALIFORNIA
Mechanical Systems CALIFORNIA ENERGY COMMISSION

CERTIFICATE OF COMPLIANCE		NRCC-MCH-E
Project Name: Perris Fire Station	Report Page:	(Page 28 of 65)
	Date Prepared:	11/26/2025

Fan Energy Index (FEI)

CU/FC-2A	Embedded Fan <5HP or <4.1kW	
CU/FC-3A	Embedded Fan <5HP or <4.1kW	
CU/FC-4A	Embedded Fan <5HP or <4.1kW	
CU/FC-5A	Embedded Fan <5HP or <4.1kW	

I. SYSTEM CONTROLS

This table is used to demonstrate compliance with mandatory controls in 110.2 and 120.2 and prescriptive controls in 140.4(f) and (n), 170.2(c)4D 170.2(c)4L or requirements in 141.0(b)2E 180.2(b)2 for altered space conditioning systems.

01	02	03	04	05	06	07	08	09
System Name	System Zoning	Conditioned Floor Area Being Served (ft^2)	Thermostats 110.2(b) & (c)[1], 120.2(a) 160.3(a)2A or 141.0(b)2E & 180.2(b)2	Shut-Off Controls 120.2(e) & 160.3(a)2D	Isolation Zone Controls 120.2(g) & 160.3(a)2F	Demand Response 110.12 120.2(b) & 160.3(a)2B	Supply Air Temp. Reset 140.4(f) & 170.2(c)4D	Window Interlocks per 140.4(n) & 170.2(c)4D
CU/FC-1	Single zone	<= 25,000 ft^2	Setback	Auto Timer Switch	4 Hour Timer	EMCS	NA: Would increase energy use	Provided
CU/FC-2	Single zone	<= 25,000 ft^2	Setback	Auto Timer Switch	4 Hour Timer	EMCS	NA: Would increase energy use	Provided
CU/FC-3	Single zone	<= 25,000 ft^2	Setback	Auto Timer Switch	4 Hour Timer	EMCS	NA: Would increase energy use	Provided
CU/FC-4	Single zone	<= 25,000 ft^2	Setback	Auto Timer Switch	4 Hour Timer	EMCS	NA: Would increase energy use	Provided
CU/FC-5	Single zone	<= 25,000 ft^2	Setback	Auto Timer Switch	4 Hour Timer	EMCS	NA: Would increase energy use	Provided

STATE OF CALIFORNIA
Mechanical Systems CALIFORNIA ENERGY COMMISSION

CERTIFICATE OF COMPLIANCE		NRCC-MCH-E
Project Name: Perris Fire Station	Report Page:	(Page 27 of 65)
	Date Prepared:	11/26/2025

H. FAN SYSTEMS & AIR ECONOMIZERS

[5] Complex Fan System means a fan system that combines a single cabinet fan system with other supply fans, exhaust fans, or both.
[6] Computer room economizers must meet requirements of 140.9(a) and will be documented on the NRCC-PRC-E document..

H. EXHAUST AIR HEAT RECOVERY 140.4(q), 170.2(c)4O

01	02	03	04	05	06	07	08	09	10	11
Fan System Name	Qty	Hours of Operation per Year	Design Supply Airflow Rate	Outdoor Airflow	% Outdoor Air at Full Design Airflow	Exemptions to Exhaust Air Heat Recovery Requirement per 140.4(q) & 170.2(c)4O	Exhaust Air Heat Recovery 140.4(q) & 170.2(c)4O	Type Of Heat Recovery Rating	Required Recovery Ratio	Energy Recovery Bypass

Fan Energy Index (FEI)

01	02	03
Name or Item Tag	FEI Exception	FEI
CU/FC-1	Lowrise Multifamily Occupancy	
CU/FC-2	Lowrise Multifamily Occupancy	
CU/FC-3	Lowrise Multifamily Occupancy	
CU/FC-4	Lowrise Multifamily Occupancy	
CU/FC-5	Lowrise Multifamily Occupancy	
CU/FC-6	Lowrise Multifamily Occupancy	
CU/FC-7	Lowrise Multifamily Occupancy	
CU/FC-8	Lowrise Multifamily Occupancy	
CU/FC-9	Lowrise Multifamily Occupancy	
CU/FC-10	Lowrise Multifamily Occupancy	
CU/FC-11	Embedded Fan <5HP or <4.1kW	
CU/FC-12	Embedded Fan <5HP or <4.1kW	
CU/FC-13	Embedded Fan <5HP or <4.1kW	
CU/FC-1A	Embedded Fan <5HP or <4.1kW	

STK ARCHITECTURE, INC.
42095 ZEVO DR., TEMECULA, CALIFORNIA 92590-3780
Phone: 951.296.9110 Fax: 951.296.6079 Email: stk@stkinc.com

CONSULTANT:
DESIGN WEST ENGINEERING
MECHANICAL • ELECTRICAL • ENERGY CONSULTANTS
Email: code@designwesteng.com

REVIEWED FOR CODE COMPLIANCE
BUILDING BUREAU SOLUTIONS INC.

REGISTERED PROFESSIONAL ENGINEER STEVEN M. JOHNSON No. 33209 SIGNED:04/15/2026 MECHANICAL STATE OF CALIFORNIA

PROJECT ADMINISTERED BY:
CITY OF PERRIS

101 NORTH "D" STREET
PERRIS, CA 92570

PROJECT NAME:
SOUTH FIRE STATION AND ADMINISTRATIVE BUILDING

PROJECT CIP: F077

2495 MURRIETA ROAD
PERRIS, CA 92585

ISSUE INFORMATION:

DATE:	INFORMATION:
11-26-25	95% CD SUBMITTAL
02-05-26	1 1st PC RESPONSE
02-19-26	2 2nd PC RESPONSE

SHEET INFORMATION:
STK PROJECT NO.: 365-03-25
SCALE: AS NOTED
DATE: NOVEMBER 2025
PLOT DATE: –
DRAWN BY: JG / JW

SEAL:

SHEET TITLE:
ENERGY COMPLIANCE DOCUMENTS

SHEET NO.:
M5.7

25-114

R:_PROJECT\2025\25-114 Perris Fire Station_CAD\25-114 M-ENV-sheets.dwg 04/14/2026 6:47PM

STATE OF CALIFORNIA
Mechanical Systems
CALIFORNIA ENERGY COMMISSION

CERTIFICATE OF COMPLIANCE		NRCC-MCH-E
Project Name: Perris Fire Station	Report Page:	(Page 32 of 65)
	Date Prepared:	11/26/2025

J. VENTILATION AND INDOOR AIR QUALITY

Space Name or Item Tag	Mechanical Ventilation Required per 120.1(c)3[3] & 160.2(c)3					Exh. Vent per 120.1(c)4 & 160.2(c)4		DCV or Sensor Controls per 120.1(d)3, 120.1(d)5, and 120.1(e)3[6] 160.2(c)5D 160.2(c)5E 160.2(c)5D	
	Occupancy Type[4]	Conditioned Floor Area (ft^2)	# of Shower heads/ toilets	# of people[5]	Required Min OA CFM	Required Min CFM	Provided per Design CFM		
Sleeping Quarters	Bedroom/living room (hotel/motel/dorm)	106			15.9	0	0	DCV	NA: Not required per §120.1(d)3
								Occ Sensor	NA: Not required space type
17	Total System Required Min OA CFM				16	18	Ventilation for this System Complies?		Yes
	04	05			06			07	
System Name	CU/FC-4	System Design OA CFM Airflow[1]		16	System Design Transfer Air CFM		0	Air Filtration per 120.1(c) 141.0(b)2 and 160.2(c)21[2]	
								Provided	
08	09	10	11	12	13	14	15	16	
Space Name or Item Tag	Mechanical Ventilation Required per 120.1(c)3[3] & 160.2(c)3					Exh. Vent per 120.1(c)4 & 160.2(c)4		DCV or Sensor Controls per 120.1(d)3, 120.1(d)5, and 120.1(e)3[6] 160.2(c)5D 160.2(c)5E 160.2(c)5D	
	Occupancy Type[4]	Conditioned Floor Area (ft^2)	# of Shower heads/ toilets	# of people[5]	Required Min OA CFM	Required Min CFM	Provided per Design CFM		
Sleeping Quarters	Bedroom/living room (hotel/motel/dorm)	106			15.9	0	0	DCV	NA: Not required per §120.1(d)3
								Occ Sensor	NA: Not required space type
17	Total System Required Min OA CFM				16	18	Ventilation for this System Complies?		Yes
	04	05			06			07	
System Name	CU/FC-5	System Design OA CFM Airflow[1]		16	System Design Transfer Air CFM		0	Air Filtration per 120.1(c) 141.0(b)2 and 160.2(c)21[2]	
								Provided	
08	09	10	11	12	13	14	15	16	

STATE OF CALIFORNIA
Mechanical Systems
CALIFORNIA ENERGY COMMISSION

CERTIFICATE OF COMPLIANCE		NRCC-MCH-E
Project Name: Perris Fire Station	Report Page:	(Page 31 of 65)
	Date Prepared:	11/26/2025

J. VENTILATION AND INDOOR AIR QUALITY

Space Name or Item Tag	Mechanical Ventilation Required per 120.1(c)3[3] & 160.2(c)3					Exh. Vent per 120.1(c)4 & 160.2(c)4		DCV or Sensor Controls per 120.1(d)3, 120.1(d)5, and 120.1(e)3[6] 160.2(c)5D 160.2(c)5E 160.2(c)5D	
	Occupancy Type[4]	Conditioned Floor Area (ft^2)	# of Shower heads/ toilets	# of people[5]	Required Min OA CFM	Required Min CFM	Provided per Design CFM		
Sleeping Quarters	Bedroom/living room (hotel/motel/dorm)	109			16.3	0	0	DCV	NA: Not required per §120.1(d)3
								Occ Sensor	NA: Not required space type
17	Total System Required Min OA CFM				16	18	Ventilation for this System Complies?		Yes
	04	05			06			07	
System Name	CU/FC-2	System Design OA CFM Airflow[1]		16	System Design Transfer Air CFM		0	Air Filtration per 120.1(c) 141.0(b)2 and 160.2(c)21[2]	
								Provided	
08	09	10	11	12	13	14	15	16	
Space Name or Item Tag	Mechanical Ventilation Required per 120.1(c)3[3] & 160.2(c)3					Exh. Vent per 120.1(c)4 & 160.2(c)4		DCV or Sensor Controls per 120.1(d)3, 120.1(d)5, and 120.1(e)3[6] 160.2(c)5D 160.2(c)5E 160.2(c)5D	
	Occupancy Type[4]	Conditioned Floor Area (ft^2)	# of Shower heads/ toilets	# of people[5]	Required Min OA CFM	Required Min CFM	Provided per Design CFM		
Sleeping Quarters	Bedroom/living room (hotel/motel/dorm)	106			15.9	0	0	DCV	NA: Not required per §120.1(d)3
								Occ Sensor	NA: Not required space type
17	Total System Required Min OA CFM				16	18	Ventilation for this System Complies?		Yes
	04	05			06			07	
System Name	CU/FC-3	System Design OA CFM Airflow[1]		16	System Design Transfer Air CFM		0	Air Filtration per 120.1(c) 141.0(b)2 and 160.2(c)21[2]	
								Provided	
08	09	10	11	12	13	14	15	16	

STATE OF CALIFORNIA
Mechanical Systems
CALIFORNIA ENERGY COMMISSION

CERTIFICATE OF COMPLIANCE		NRCC-MCH-E
Project Name: Perris Fire Station	Report Page:	(Page 30 of 65)
	Date Prepared:	11/26/2025

I. SYSTEM CONTROLS

CU/FC-3A	Single zone	<= 25,000 ft^2	Setback	Auto Timer Switch	4 Hour Timer	EMCS	NA: Would increase energy use	Provided
CU/FC-4A	Single zone	<= 25,000 ft^2	Setback	Auto Timer Switch	4 Hour Timer	EMCS	NA: Would increase energy use	Provided
CU/FC-5A	Single zone	<= 25,000 ft^2	Setback	Auto Timer Switch	4 Hour Timer	EMCS	NA: Would increase energy use	Provided

[1]FOOTNOTES: Gravity gas wall heaters, gravity floor heaters, gravity room heaters, non-central electric heaters, fireplaces or decorative gas appliances, wood stoves are not required to have setback thermostats.

J. VENTILATION AND INDOOR AIR QUALITY

This table is used to demonstrate compliance with mandatory ventilation requirements in 120.1 120.2(e)3B 140.4(p) and 140.4(q) for all nonresidential and hotel/motel and d:t24refnolink/]160.2, 160.3(a)3D, 170.2(a)4N, 170.2(a)4O for high-rise residential occupancies. For alterations, only ventilation systems being altered within the scope of the permit application need to be documented in this table. In lieu of this table, the required outdoor ventilation rates and airflows may be shown on the plans or the calculations can be presented in a spreadsheet.

01	☐	Check the box if the project is showing ventilation calculations on the plans, or attaching the calculations instead of completing this table.
02	☒	Check this box if the project included Nonresidential, Hotel/Motel Spaces or Multifamily Common Use Spaces
	☐	
03	☐	Check the box if the project is using natural ventilation in any nonresidential or hotel/motel spaces to meet required ventilation rates per 120.1(c)2.

Nonresidential and Hotel/ Motel Multifamily Common Use Ventilation Systems

	04	05			06			07
System Name	CU/FC-1	System Design OA CFM Airflow[1]		16	System Design Transfer Air CFM		0	Air Filtration per 120.1(c) 141.0(b)2 and 160.2(c)21[2]
								Provided
08	09	10	11	12	13	14	15	16

STATE OF CALIFORNIA
Mechanical Systems
CALIFORNIA ENERGY COMMISSION

CERTIFICATE OF COMPLIANCE		NRCC-MCH-E
Project Name: Perris Fire Station	Report Page:	(Page 35 of 65)
	Date Prepared:	11/26/2025

J. VENTILATION AND INDOOR AIR QUALITY

Space Name or Item Tag	Mechanical Ventilation Required per 120.1(c)3[3] & 160.2(c)3					Exh. Vent per 120.1(c)4 & 160.2(c)4		DCV or Sensor Controls per 120.1(d)3, 120.1(d)5, and 120.1(e)3[6] 160.2(c)5D 160.2(c)5E 160.2(c)5D	
	Occupancy Type[4]	Conditioned Floor Area (ft^2)	# of Shower heads/ toilets	# of people[5]	Required Min OA CFM	Required Min CFM	Provided per Design CFM		
Sleeping Quarters	Bedroom/living room (hotel/motel/dorm)	111			16.6	0	0	DCV	NA: Not required per §120.1(d)3
								Occ Sensor	NA: Not required space type
17	Total System Required Min OA CFM				17	18	Ventilation for this System Complies?		Yes
	04	05			06			07	
System Name	CU/FC-10	System Design OA CFM Airflow[1]		139	System Design Transfer Air CFM		0	Air Filtration per 120.1(c) 141.0(b)2 and 160.2(c)21[2]	
								Provided	
08	09	10	11	12	13	14	15	16	
Space Name or Item Tag	Mechanical Ventilation Required per 120.1(c)3[3] & 160.2(c)3					Exh. Vent per 120.1(c)4 & 160.2(c)4		DCV or Sensor Controls per 120.1(d)3, 120.1(d)5, and 120.1(e)3[6] 160.2(c)5D 160.2(c)5E 160.2(c)5D	
	Occupancy Type[4]	Conditioned Floor Area (ft^2)	# of Shower heads/ toilets	# of people[5]	Required Min OA CFM	Required Min CFM	Provided per Design CFM		
Sleeping Quarters	Bedroom/living room (hotel/motel/dorm)	263			39.4	0	0	DCV	NA: Not required per §120.1(d)3
								Occ Sensor	NA: Not required space type
Restroom	Shower room	83			0	0	100	DCV	NA: Not required per §120.1(d)3
								Occ Sensor	NA: Not required space type
17	Total System Required Min OA CFM				39	18	Ventilation for this System Complies?		Yes

STATE OF CALIFORNIA
Mechanical Systems
CALIFORNIA ENERGY COMMISSION

CERTIFICATE OF COMPLIANCE		NRCC-MCH-E
Project Name: Perris Fire Station	Report Page:	(Page 34 of 65)
	Date Prepared:	11/26/2025

J. VENTILATION AND INDOOR AIR QUALITY

Space Name or Item Tag	Mechanical Ventilation Required per 120.1(c)3[3] & 160.2(c)3					Exh. Vent per 120.1(c)4 & 160.2(c)4		DCV or Sensor Controls per 120.1(d)3, 120.1(d)5, and 120.1(e)3[6] 160.2(c)5D 160.2(c)5E 160.2(c)5D	
	Occupancy Type[4]	Conditioned Floor Area (ft^2)	# of Shower heads/ toilets	# of people[5]	Required Min OA CFM	Required Min CFM	Provided per Design CFM		
Sleeping Quarters	Bedroom/living room (hotel/motel/dorm)	107			16	0	0	DCV	NA: Not required per §120.1(d)3
								Occ Sensor	NA: Not required space type
17	Total System Required Min OA CFM				16	18	Ventilation for this System Complies?		Yes
	04	05			06			07	
System Name	CU/FC-8	System Design OA CFM Airflow[1]		16	System Design Transfer Air CFM		0	Air Filtration per 120.1(c) 141.0(b)2 and 160.2(c)21[2]	
								Provided	
08	09	10	11	12	13	14	15	16	
Space Name or Item Tag	Mechanical Ventilation Required per 120.1(c)3[3] & 160.2(c)3					Exh. Vent per 120.1(c)4 & 160.2(c)4		DCV or Sensor Controls per 120.1(d)3, 120.1(d)5, and 120.1(e)3[6] 160.2(c)5D 160.2(c)5E 160.2(c)5D	
	Occupancy Type[4]	Conditioned Floor Area (ft^2)	# of Shower heads/ toilets	# of people[5]	Required Min OA CFM	Required Min CFM	Provided per Design CFM		
Sleeping Quarters	Bedroom/living room (hotel/motel/dorm)	106			15.9	0	0	DCV	NA: Not required per §120.1(d)3
								Occ Sensor	NA: Not required space type
17	Total System Required Min OA CFM				16	18	Ventilation for this System Complies?		Yes
	04	05			06			07	
System Name	CU/FC-9	System Design OA CFM Airflow[1]		17	System Design Transfer Air CFM		0	Air Filtration per 120.1(c) 141.0(b)2 and 160.2(c)21[2]	
								Provided	
08	09	10	11	12	13	14	15	16	

STATE OF CALIFORNIA
Mechanical Systems
CALIFORNIA ENERGY COMMISSION

CERTIFICATE OF COMPLIANCE		NRCC-MCH-E
Project Name: Perris Fire Station	Report Page:	(Page 33 of 65)
	Date Prepared:	11/26/2025

J. VENTILATION AND INDOOR AIR QUALITY

Space Name or Item Tag	Mechanical Ventilation Required per 120.1(c)3[3] & 160.2(c)3					Exh. Vent per 120.1(c)4 & 160.2(c)4		DCV or Sensor Controls per 120.1(d)3, 120.1(d)5, and 120.1(e)3[6] 160.2(c)5D 160.2(c)5E 160.2(c)5D	
	Occupancy Type[4]	Conditioned Floor Area (ft^2)	# of Shower heads/ toilets	# of people[5]	Required Min OA CFM	Required Min CFM	Provided per Design CFM		
Sleeping Quarters	Bedroom/living room (hotel/motel/dorm)	105			15.8	0	0	DCV	NA: Not required per §120.1(d)3
								Occ Sensor	NA: Not required space type
17	Total System Required Min OA CFM				16	18	Ventilation for this System Complies?		Yes
	04	05			06			07	
System Name	CU/FC-6	System Design OA CFM Airflow[1]		16	System Design Transfer Air CFM		0	Air Filtration per 120.1(c) 141.0(b)2 and 160.2(c)21[2]	
								Provided	
08	09	10	11	12	13	14	15	16	
Space Name or Item Tag	Mechanical Ventilation Required per 120.1(c)3[3] & 160.2(c)3					Exh. Vent per 120.1(c)4 & 160.2(c)4		DCV or Sensor Controls per 120.1(d)3, 120.1(d)5, and 120.1(e)3[6] 160.2(c)5D 160.2(c)5E 160.2(c)5D	
	Occupancy Type[4]	Conditioned Floor Area (ft^2)	# of Shower heads/ toilets	# of people[5]	Required Min OA CFM	Required Min CFM	Provided per Design CFM		
Sleeping Quarters	Bedroom/living room (hotel/motel/dorm)	107			16	0	0	DCV	NA: Not required per §120.1(d)3
								Occ Sensor	NA: Not required space type
17	Total System Required Min OA CFM				16	18	Ventilation for this System Complies?		Yes
	04	05			06			07	
System Name	CU/FC-7	System Design OA CFM Airflow[1]		16	System Design Transfer Air CFM		0	Air Filtration per 120.1(c) 141.0(b)2 and 160.2(c)21[2]	
								Provided	
08	09	10	11	12	13	14	15	16	

STATE OF CALIFORNIA
Mechanical Systems
CALIFORNIA ENERGY COMMISSION

CERTIFICATE OF COMPLIANCE		NRCC-MCH-E
Project Name: Perris Fire Station	Report Page:	(Page 38 of 65)
	Date Prepared:	11/26/2025

J. VENTILATION AND INDOOR AIR QUALITY

Corridors	Corridor	293			43.9	0	0	DCV	NA: Not required per §120.1(d)3
								Occ Sensor	NA: Not required space type
Lobby	Lobbies	181			90.5	0	0	DCV	NA: Not required per §120.1(d)3
								Occ Sensor	NA: Not required space type
comm 1	All others	68			10.2	0	0	DCV	NA: Not required per §120.1(d)3
								Occ Sensor	NA: Not required space type
17	Total System Required Min OA CFM				222	18	Ventilation for this System Complies?		Yes
	04	05			06			07	
System Name	CU/FC-13	System Design OA CFM Airflow[1]		675	System Design Transfer Air CFM		0	Air Filtration per 120.1(c) 141.0(b)2 and 160.2(c)21[2]	
								Provided	
08	09	10	11	12	13	14	15	16	
Space Name or Item Tag	Mechanical Ventilation Required per 120.1(c)3[3] & 160.2(c)3					Exh. Vent per 120.1(c)4 & 160.2(c)4		DCV or Sensor Controls per 120.1(d)3, 120.1(d)5, and 120.1(e)3[6] 160.2(c)5D 160.2(c)5E 160.2(c)5D	
	Occupancy Type[4]	Conditioned Floor Area (ft^2)	# of Shower heads/ toilets	# of people[5]	Required Min OA CFM	Required Min CFM	Provided per Design CFM		
Restrooms	Shower room	398	5		0	250	500	DCV	NA: Not required per §120.1(d)3
								Occ Sensor	NA: Not required space type

STATE OF CALIFORNIA
Mechanical Systems
CALIFORNIA ENERGY COMMISSION

CERTIFICATE OF COMPLIANCE		NRCC-MCH-E
Project Name: Perris Fire Station	Report Page:	(Page 37 of 65)
	Date Prepared:	11/26/2025

J. VENTILATION AND INDOOR AIR QUALITY

	04	05			06			07	
System Name	CU/FC-12	System Design OA CFM Airflow[1]		322	System Design Transfer Air CFM		0	Air Filtration per 120.1(c) 141.0(b)2 and 160.2(c)21[2]	
								Provided	
08	09	10	11	12	13	14	15	16	
Space Name or Item Tag	Mechanical Ventilation Required per 120.1(c)3[3] & 160.2(c)3					Exh. Vent per 120.1(c)4 & 160.2(c)4		DCV or Sensor Controls per 120.1(d)3, 120.1(d)5, and 120.1(e)3[6] 160.2(c)5D 160.2(c)5E 160.2(c)5D	
	Occupancy Type[4]	Conditioned Floor Area (ft^2)	# of Shower heads/ toilets	# of people[5]	Required Min OA CFM	Required Min CFM	Provided per Design CFM		
Office 1	Office space	145			21.8	0	0	DCV	NA: Not required per §120.1(d)3
								Occ Sensor	NA: Not required space type
Laundry	Laundry room (dwelling unit)	82			12.3	0	0	DCV	NA: Not required per §120.1(d)3
								Occ Sensor	NA: Not required space type
Storage 9' Ceiling	All others	72			10.8	0	0	DCV	NA: Not required per §120.1(d)3
								Occ Sensor	NA: Not required space type
Restroom	Shower room	72	1		0	50	100	DCV	NA: Not required per §120.1(d)3
								Occ Sensor	NA: Not required space type
Office 2 & 3	Office space	216			32.4	0	0	DCV	NA: Not required per §120.1(d)3
								Occ Sensor	NA: Not required space type

STATE OF CALIFORNIA
Mechanical Systems
CALIFORNIA ENERGY COMMISSION

CERTIFICATE OF COMPLIANCE		NRCC-MCH-E
Project Name: Perris Fire Station	Report Page:	(Page 36 of 65)
	Date Prepared:	11/26/2025

J. VENTILATION AND INDOOR AIR QUALITY

	04	05			06			07	
System Name	CU/FC-11	System Design OA CFM Airflow[1]		376	System Design Transfer Air CFM		0	Air Filtration per 120.1(c) 141.0(b)2 and 160.2(c)21[2]	
								Provided	
08	09	10	11	12	13	14	15	16	
Space Name or Item Tag	Mechanical Ventilation Required per 120.1(c)3[3] & 160.2(c)3					Exh. Vent per 120.1(c)4 & 160.2(c)4		DCV or Sensor Controls per 120.1(d)3, 120.1(d)5, and 120.1(e)3[6] 160.2(c)5D 160.2(c)5E 160.2(c)5D	
	Occupancy Type[4]	Conditioned Floor Area (ft^2)	# of Shower heads/ toilets	# of people[5]	Required Min OA CFM	Required Min CFM	Provided per Design CFM		
Kitchen	Kitchenettes	327			0	98.1	110	DCV	NA: Not required per §120.1(d)3
								Occ Sensor	NA: Not required space type
Storage 10' Ceiling	All others	63			9.4	0	0	DCV	NA: Not required per §120.1(d)3
								Occ Sensor	NA: Not required space type
Dining	Break room	375			187.5	0	0	DCV	NA: Not required per §120.1(d)3
								Occ Sensor	NA: Not required space type
Day Room	All others	459			68.8	0	0	DCV	NA: Not required per §120.1(d)3
								Occ Sensor	NA: Not required space type
17	Total System Required Min OA CFM				266	18	Ventilation for this System Complies?		Yes

STK ARCHITECTURE, INC.
42095 ZEVO DR., TEMECULA, CALIFORNIA 92590-3780
Phone: 951.296.9110 Fax: 951.296.6079 Email: stk@stkinc.com

CONSULTANT:

REVIEWED FOR CODE COMPLIANCE

DESIGN WEST ENGINEERING
MECHANICAL • ELECTRICAL • ENERGY CONSULTANTS
Email: code@designwesteng.com

BUILDING BUREAU SOLUTIONS INC.

REGISTERED PROFESSIONAL ENGINEER STEVEN M. JOHNSON No. 33209 SIGNED:04/15/2026 MECHANICAL STATE OF CALIFORNIA

PROJECT ADMINISTERED BY:
CITY OF PERRIS

101 NORTH "D" STREET
PERRIS, CA 92570

PROJECT NAME:
SOUTH FIRE STATION AND ADMINISTRATIVE BUILDING

PROJECT CIP: F077

2495 MURRIETA ROAD
PERRIS, CA 92585

ISSUE INFORMATION:

DATE:	INFORMATION:
11-26-25	95% CD SUBMITTAL
02-05-26	△1 1st PC RESPONSE
02-19-26	△2 2nd PC RESPONSE

SHEET INFORMATION:
STK PROJECT NO.: 365-03-25
SCALE: AS NOTED
DATE: NOVEMBER 2025
PLOT DATE: –
DRAWN BY: JG / JW

SEAL:

SHEET TITLE:
ENERGY COMPLIANCE DOCUMENTS

SHEET NO.: △1 **M5.8**

25-114

04/14/2026 6:47PM R:_PROJECT\2025\25-114 Perris Fire Station_CAD\25-114 M-ENV-sheets.dwg

J. VENTILATION AND INDOOR AIR QUALITY

Space Name or Item Tag	Mechanical Ventilation Required per 120.1(c)3[3] & 160.2(c)3: Occupancy Type[4]	Conditioned Floor Area (ft^2)	# of Shower heads/ toilets	# of people[5]	Required Min OA CFM	Exh. Vent per 120.1(c)4 & 160.2(c)4: Required Min CFM	Provided per Design CFM	DCV or Sensor Controls per 120.1(d)3, 120.1(d)5, and 120.1(e)3[6] 160.2(c)5D 160.2(c)5E 160.2(c)5D	
Breakroom	Break room	180			90	0	0	DCV	NA: Not required per §120.1(d)3
								Occ Sensor	NA: Not required space type
Janitor - Chemical Storage	Occupiable storage rooms for liquids/ gels	39			0	58.5	0	DCV	NA: Not required per §120.1(d)3
								Occ Sensor	NA: Not required space type
Restrooms	Toilet, public	152			0	0	200	DCV	NA: Not required per §120.1(d)3
								Occ Sensor	NA: Not required space type
Corridors	Corridor	422			63.3	0	0	DCV	NA: Not required per §120.1(d)3
								Occ Sensor	NA: Not required space type
Offices	Office space	383			57.4	0	0	DCV	NA: Not required per §120.1(d)3
								Occ Sensor	NA: Not required space type
comm 2	All others	68			10.2	0	0	DCV	NA: Not required per §120.1(d)3
								Occ Sensor	NA: Not required space type
17	Total System Required Min OA CFM				221	18	Ventilation for this System Complies?		Yes

J. VENTILATION AND INDOOR AIR QUALITY

Space Name or Item Tag	Mechanical Ventilation Required per 120.1(c)3[3] & 160.2(c)3: Occupancy Type[4]	Conditioned Floor Area (ft^2)	# of Shower heads/ toilets	# of people[5]	Required Min OA CFM	Exh. Vent per 120.1(c)4 & 160.2(c)4: Required Min CFM	Provided per Design CFM	DCV or Sensor Controls per 120.1(d)3, 120.1(d)5, and 120.1(e)3[6] 160.2(c)5D 160.2(c)5E 160.2(c)5D	
Zone 2 - Training/MPR	Assembly- multiuse	641			320.5	0	0	DCV	NA: Not required per §120.1(d)3
								Occ Sensor	NA: Not required space type
17	Total System Required Min OA CFM				320	18	Ventilation for this System Complies?		Yes
04		05			06			07	
System Name	CU/FC-3A	System Design OA CFM Airflow[1]		445	System Design Transfer Air CFM		0	Air Filtration per 120.1(c) 141.0(b)2 and 160.2(c)21[2]: Provided	
08	09	10	11	12	13	14	15	16	
Space Name or Item Tag	Mechanical Ventilation Required per 120.1(c)3[3] & 160.2(c)3: Occupancy Type[4]	Conditioned Floor Area (ft^2)	# of Shower heads/ toilets	# of people[5]	Required Min OA CFM	Exh. Vent per 120.1(c)4 & 160.2(c)4: Required Min CFM	Provided per Design CFM	DCV or Sensor Controls per 120.1(d)3, 120.1(d)5, and 120.1(e)3[6] 160.2(c)5D 160.2(c)5E 160.2(c)5D	
Zone 2 - Training/MPR	Assembly- multiuse	885			442.5	0	0	DCV	NA: Not required per §120.1(d)3
								Occ Sensor	NA: Not required space type
17	Total System Required Min OA CFM				442	18	Ventilation for this System Complies?		Yes
04		05			06			07	
System Name	CU/FC-4A	System Design OA CFM Airflow[1]		421	System Design Transfer Air CFM		0	Air Filtration per 120.1(c) 141.0(b)2 and 160.2(c)21[2]: Provided	
08	09	10	11	12	13	14	15	16	

J. VENTILATION AND INDOOR AIR QUALITY

Exercise	Health club/aerobics	574			86.1	0	0	DCV	NA: Not required per §120.1(d)3
								Occ Sensor	NA: Not required space type
Corridors	Corridor	592			88.8	0	0	DCV	NA: Not required per §120.1(d)3
								Occ Sensor	NA: Not required space type
17	Total System Required Min OA CFM				175	18	Ventilation for this System Complies?		Yes
04		05			06			07	
System Name	CU/FC-1A	System Design OA CFM Airflow[1]		163	System Design Transfer Air CFM		0	Air Filtration per 120.1(c) 141.0(b)2 and 160.2(c)21[2]: Provided	
08	09	10	11	12	13	14	15	16	
Space Name or Item Tag	Mechanical Ventilation Required per 120.1(c)3[3] & 160.2(c)3: Occupancy Type[4]	Conditioned Floor Area (ft^2)	# of Shower heads/ toilets	# of people[5]	Required Min OA CFM	Exh. Vent per 120.1(c)4 & 160.2(c)4: Required Min CFM	Provided per Design CFM	DCV or Sensor Controls per 120.1(d)3, 120.1(d)5, and 120.1(e)3[6] 160.2(c)5D 160.2(c)5E 160.2(c)5D	
Zone 1 - Open Office Space	Office space	979			146.8	0	0	DCV	NA: Not required per §120.1(d)3
								Occ Sensor	NA: Not required space type
17	Total System Required Min OA CFM				147	18	Ventilation for this System Complies?		Yes
04		05			06			07	
System Name	CU/FC-2A	System Design OA CFM Airflow[1]		322	System Design Transfer Air CFM		0	Air Filtration per 120.1(c) 141.0(b)2 and 160.2(c)21[2]: Provided	
08	09	10	11	12	13	14	15	16	

L. DISTRIBUTION (DUCTWORK and PIPING)

		Dwelling Units: Total duct leakage of duct system shall not exceed 12% or duct system to outside shall not exceed 6% per RA3.1.4 required for systems?	No
		Duct leakage testing per CMC Section 603.10.1 required for these systems?	Yes
11	No	The scope of the project includes only duct systems serving healthcare facilities	
12	Yes	Duct system provides conditioned air to an occupiable space for a constant volume, single zone, space-conditioning system.	
13	Yes	The space conditioning system serves less than 5,000 ft^2 of conditioned floor area.	
14	No	The combined surface area of the ducts is more than 25% of the total surface area of the entire duct system:	
15		The scope of the project includes extending an existing duct system, which is constructed, insulated or sealed with asbestos.	
16	No	The scope of the project includes an existing duct system that is documented to have been previously sealed as confirmed through field verification and diagnostic testing in accordance with procedures in the Reference Nonresidential Appendix NA2.	
17		All Ductwork and plenums with pressure class ratings shall be constructed to Seal Class A	
18		All ductwork is an extension of an existing duct system	
19		Ductwork serving individual dwelling unit	
20		< 25 ft of new or replacement space conditioning ducts installed	
21	R-8	Duct Insulation R-value	
22			
23			
The answers to the questions below apply to the following duct systems:	CU/FC-12	**NR/ Common Use:** Duct leakage testing shall not exceed 6% per NA7.5.3 required for these systems?	No

J. VENTILATION AND INDOOR AIR QUALITY

[2] Air filtration requirements apply to the following three system types per 120.1(c)1A: space conditioning systems utilizing ducts to supply air to occupiable space; supply-only ventilation systems providing outside air to occupiable space; supply side of balanced ventilation systems including heat recovery and energy recovery ventilation systems providing outside air to occupiable space.

[3] Uniform Mechanical Code may have more stringent ventilation requirements; the most stringent code requirement takes precedence.

[4] See Standards Tables 120.1-A and 120.1-B.

[5] For lecture halls with fixed seating, the expected number of occupants shall be determined in accordance with the California Building Code.

[6] 120.2(e)3 requires systems serving rooms that are required by 130.1(c) to have lighting occupancy sensing controls to also have occupancy sensing zone controls for ventilation. Examples of spaces which require lighting occupancy sensors include offices 250ft^2 or smaller, multipurpose rooms less than 1,000 ft^2, classrooms, conference rooms, restrooms, aisles and open areas in warehouses, library book stack aisles, corridors, stairwells, parking garages, and loading and unloading zones, unless excepted by 130.1(c).

K. TERMINAL BOX CONTROLS

This section does not apply to this project.

L. DISTRIBUTION (DUCTWORK and PIPING)

This table is used to show compliance with mandatory pipe insulation requirements found in 120.3 and mandatory requirements found in 120.4(g) for duct sealing.

01	☐	Insulation shall be protected from damage, including that due to sunlight, moisture, equipment maintenance, and wind. Insulation exposed to weather shall be installed with a cover suitable for outdoor service. Insulation covering chilled water piping and refrigerant suction piping located outside the conditioned space shall have a Class I or Class II vapor retarder. All penetrations and joints of which shall be sealed.

Duct Leakage Testing

The answers to the questions below apply to the following duct systems:	CU/FC-11	**NR/ Common Use:** Duct leakage testing shall not exceed 6% per NA7.5.3 required for these systems?	No

J. VENTILATION AND INDOOR AIR QUALITY

04		05			06			07	
System Name	CU/FC-5A	System Design OA CFM Airflow[1]		390	System Design Transfer Air CFM		0	Air Filtration per 120.1(c) 141.0(b)2 and 160.2(c)21[2]: Provided	
08	09	10	11	12	13	14	15	16	
Space Name or Item Tag	Mechanical Ventilation Required per 120.1(c)3[3] & 160.2(c)3: Occupancy Type[4]	Conditioned Floor Area (ft^2)	# of Shower heads/ toilets	# of people[5]	Required Min OA CFM	Exh. Vent per 120.1(c)4 & 160.2(c)4: Required Min CFM	Provided per Design CFM	DCV or Sensor Controls per 120.1(d)3, 120.1(d)5, and 120.1(e)3[6] 160.2(c)5D 160.2(c)5E 160.2(c)5D	
Lobby	Main Entry Lobby	194			97	0	0	DCV	NA: Not required per §120.1(d)3
								Occ Sensor	NA: Not required space type
Restroom	Toilet, public	80			0	0	100	DCV	NA: Not required per §120.1(d)3
								Occ Sensor	NA: Not required space type
Offices	Office space	300			45	0	0	DCV	NA: Not required per §120.1(d)3
								Occ Sensor	NA: Not required space type
Conference Room	Conference/ meeting	295			147.5	0	0	DCV	NA: Not required per §120.1(d)3
								Occ Sensor	NA: Not required space type
17	Total System Required Min OA CFM				290	18	Ventilation for this System Complies?		Yes

[1] FOOTNOTES: System CFM should include both mechanical and natural ventilation for the zone/system

L. DISTRIBUTION (DUCTWORK and PIPING)

		Dwelling Units: Total duct leakage of duct system shall not exceed 12% or duct system to outside shall not exceed 6% per RA3.1.4 required for systems?	No
		Duct leakage testing per CMC Section 603.10.1 required for these systems?	Yes
11	No	The scope of the project includes only duct systems serving healthcare facilities	
12	Yes	Duct system provides conditioned air to an occupiable space for a constant volume, single zone, space-conditioning system.	
13	Yes	The space conditioning system serves less than 5,000 ft^2 of conditioned floor area.	
14	No	The combined surface area of the ducts is more than 25% of the total surface area of the entire duct system:	
15		The scope of the project includes extending an existing duct system, which is constructed, insulated or sealed with asbestos.	
16	No	The scope of the project includes an existing duct system that is documented to have been previously sealed as confirmed through field verification and diagnostic testing in accordance with procedures in the Reference Nonresidential Appendix NA2.	
17		All Ductwork and plenums with pressure class ratings shall be constructed to Seal Class A	
18		All ductwork is an extension of an existing duct system	
19		Ductwork serving individual dwelling unit	
20		< 25 ft of new or replacement space conditioning ducts installed	
21	R-8	Duct Insulation R-value	
22			
23			
The answers to the questions below apply to the following duct systems:	CU/FC-2A	**NR/ Common Use:** Duct leakage testing shall not exceed 6% per NA7.5.3 required for these systems?	No

L. DISTRIBUTION (DUCTWORK and PIPING)

		Dwelling Units: Total duct leakage of duct system shall not exceed 12% or duct system to outside shall not exceed 6% per RA3.1.4 required for systems?	No
		Duct leakage testing per CMC Section 603.10.1 required for these systems?	Yes
11	No	The scope of the project includes only duct systems serving healthcare facilities	
12	Yes	Duct system provides conditioned air to an occupiable space for a constant volume, single zone, space-conditioning system.	
13	Yes	The space conditioning system serves less than 5,000 ft^2 of conditioned floor area.	
14	No	The combined surface area of the ducts is more than 25% of the total surface area of the entire duct system:	
15		The scope of the project includes extending an existing duct system, which is constructed, insulated or sealed with asbestos.	
16	No	The scope of the project includes an existing duct system that is documented to have been previously sealed as confirmed through field verification and diagnostic testing in accordance with procedures in the Reference Nonresidential Appendix NA2.	
17		All Ductwork and plenums with pressure class ratings shall be constructed to Seal Class A	
18		All ductwork is an extension of an existing duct system	
19		Ductwork serving individual dwelling unit	
20		< 25 ft of new or replacement space conditioning ducts installed	
21	R-8	Duct Insulation R-value	
22			
23			
The answers to the questions below apply to the following duct systems:	CU/FC-1A	**NR/ Common Use:** Duct leakage testing shall not exceed 6% per NA7.5.3 required for these systems?	No

L. DISTRIBUTION (DUCTWORK and PIPING)

		Dwelling Units: Total duct leakage of duct system shall not exceed 12% or duct system to outside shall not exceed 6% per RA3.1.4 required for systems?	No
		Duct leakage testing per CMC Section 603.10.1 required for these systems?	Yes
11	No	The scope of the project includes only duct systems serving healthcare facilities	
12	Yes	Duct system provides conditioned air to an occupiable space for a constant volume, single zone, space-conditioning system.	
13	Yes	The space conditioning system serves less than 5,000 ft^2 of conditioned floor area.	
14	No	The combined surface area of the ducts is more than 25% of the total surface area of the entire duct system:	
15		The scope of the project includes extending an existing duct system, which is constructed, insulated or sealed with asbestos.	
16	No	The scope of the project includes an existing duct system that is documented to have been previously sealed as confirmed through field verification and diagnostic testing in accordance with procedures in the Reference Nonresidential Appendix NA2.	
17		All Ductwork and plenums with pressure class ratings shall be constructed to Seal Class A	
18		All ductwork is an extension of an existing duct system	
19		Ductwork serving individual dwelling unit	
20		< 25 ft of new or replacement space conditioning ducts installed	
21	R-8	Duct Insulation R-value	
22			
23			
The answers to the questions below apply to the following duct systems:	CU/FC-13	**NR/ Common Use:** Duct leakage testing shall not exceed 6% per NA7.5.3 required for these systems?	No

STK ARCHITECTURE, INC.
42095 ZEVO DR., TEMECULA, CALIFORNIA 92590-3780
Phone: 951.296.9110 Fax: 951.296.6079 Email: stk@stkinc.com

CONSULTANT:

REVIEWED FOR CODE COMPLIANCE

DESIGN WEST ENGINEERING
MECHANICAL • ELECTRICAL • ENERGY CONSULTANTS

BUILDING BUREAU SOLUTIONS INC.

REGISTERED PROFESSIONAL ENGINEER STEVEN M. JOHNSON No. 33209 SIGNED:04/15/2026 MECHANICAL STATE OF CALIFORNIA

PROJECT ADMINISTERED BY:

CITY OF PERRIS

101 NORTH "D" STREET
PERRIS, CA 92570

PROJECT NAME:

SOUTH FIRE STATION AND ADMINISTRATIVE BUILDING

PROJECT CIP: F077

2495 MURRIETA ROAD
PERRIS, CA 92585

ISSUE INFORMATION:

DATE:	INFORMATION:
11-26-25	95% CD SUBMITTAL
02-05-26	1 1st PC RESPONSE
02-19-26	2 2nd PC RESPONSE

SHEET INFORMATION:

STK PROJECT NO.: 365-03-25
SCALE: AS NOTED
DATE: NOVEMBER 2025
PLOT DATE: –
DRAWN BY: JG / JW

SEAL:

SHEET TITLE:

ENERGY COMPLIANCE DOCUMENTS

SHEET NO.: 1 **M5.9**

25-114

R:_PROJECT\2025\25-114 Perris Fire Station_CAD\25-114 M-ENV-sheets.dwg
04/14/2026 6:47PM

STATE OF CALIFORNIA
Mechanical Systems
CALIFORNIA ENERGY COMMISSION

CERTIFICATE OF COMPLIANCE		NRCC-MCH-E
Project Name: Perris Fire Station	**Report Page:**	**(Page 50 of 65)**
	Date Prepared:	11/26/2025

L. DISTRIBUTION (DUCTWORK and PIPING)			
		Dwelling Units: Total duct leakage of duct system shall not exceed 12% or duct system to outside shall not exceed 6% per RA3.1.4 required for systems?	No
		Duct leakage testing per CMC Section 603.10.1 required for these systems?	Yes
11	No	The scope of the project includes only duct systems serving healthcare facilities	
12	Yes	Duct system provides conditioned air to an occupiable space for a constant volume, single zone, space-conditioning system.	
13	Yes	The space conditioning system serves less than 5,000 ft^2 of conditioned floor area.	
14	No	The combined surface area of the ducts is more than 25% of the total surface area of the entire duct system:	
15		The scope of the project includes extending an existing duct system, which is constructed, insulated or sealed with asbestos.	
16	No	The scope of the project includes an existing duct system that is documented to have been previously sealed as confirmed through field verification and diagnostic testing in accordance with procedures in the Reference Nonresidential Appendix NA2.	
17		All Ductwork and plenums with pressure class ratings shall be constructed to Seal Class A	
18		All ductwork is an extension of an existing duct system	
19		Ductwork serving individual dwelling unit	
20		< 25 ft of new or replacement space conditioning ducts installed	
21	R-8	Duct Insulation R-value	
22			
23			
The answers to the questions below apply to the following duct systems:	CU/FC-5A	**NR/ Common Use:** Duct leakage testing shall not exceed 6% per NA7.5.3 required for these systems?	No

STATE OF CALIFORNIA
Mechanical Systems
CALIFORNIA ENERGY COMMISSION

CERTIFICATE OF COMPLIANCE		NRCC-MCH-E
Project Name: Perris Fire Station	**Report Page:**	**(Page 49 of 65)**
	Date Prepared:	11/26/2025

L. DISTRIBUTION (DUCTWORK and PIPING)			
		Dwelling Units: Total duct leakage of duct system shall not exceed 12% or duct system to outside shall not exceed 6% per RA3.1.4 required for systems?	No
		Duct leakage testing per CMC Section 603.10.1 required for these systems?	Yes
11	No	The scope of the project includes only duct systems serving healthcare facilities	
12	Yes	Duct system provides conditioned air to an occupiable space for a constant volume, single zone, space-conditioning system.	
13	Yes	The space conditioning system serves less than 5,000 ft^2 of conditioned floor area.	
14	No	The combined surface area of the ducts is more than 25% of the total surface area of the entire duct system:	
15		The scope of the project includes extending an existing duct system, which is constructed, insulated or sealed with asbestos.	
16	No	The scope of the project includes an existing duct system that is documented to have been previously sealed as confirmed through field verification and diagnostic testing in accordance with procedures in the Reference Nonresidential Appendix NA2.	
17		All Ductwork and plenums with pressure class ratings shall be constructed to Seal Class A	
18		All ductwork is an extension of an existing duct system	
19		Ductwork serving individual dwelling unit	
20		< 25 ft of new or replacement space conditioning ducts installed	
21	R-8	Duct Insulation R-value	
22			
23			
The answers to the questions below apply to the following duct systems:	CU/FC-4A	**NR/ Common Use:** Duct leakage testing shall not exceed 6% per NA7.5.3 required for these systems?	No

STATE OF CALIFORNIA
Mechanical Systems
CALIFORNIA ENERGY COMMISSION

CERTIFICATE OF COMPLIANCE		NRCC-MCH-E
Project Name: Perris Fire Station	**Report Page:**	**(Page 48 of 65)**
	Date Prepared:	11/26/2025

L. DISTRIBUTION (DUCTWORK and PIPING)			
		Dwelling Units: Total duct leakage of duct system shall not exceed 12% or duct system to outside shall not exceed 6% per RA3.1.4 required for systems?	No
		Duct leakage testing per CMC Section 603.10.1 required for these systems?	Yes
11	No	The scope of the project includes only duct systems serving healthcare facilities	
12	Yes	Duct system provides conditioned air to an occupiable space for a constant volume, single zone, space-conditioning system.	
13	Yes	The space conditioning system serves less than 5,000 ft^2 of conditioned floor area.	
14	No	The combined surface area of the ducts is more than 25% of the total surface area of the entire duct system:	
15		The scope of the project includes extending an existing duct system, which is constructed, insulated or sealed with asbestos.	
16	No	The scope of the project includes an existing duct system that is documented to have been previously sealed as confirmed through field verification and diagnostic testing in accordance with procedures in the Reference Nonresidential Appendix NA2.	
17		All Ductwork and plenums with pressure class ratings shall be constructed to Seal Class A	
18		All ductwork is an extension of an existing duct system	
19		Ductwork serving individual dwelling unit	
20		< 25 ft of new or replacement space conditioning ducts installed	
21	R-8	Duct Insulation R-value	
22			
23			
The answers to the questions below apply to the following duct systems:	CU/FC-3A	**NR/ Common Use:** Duct leakage testing shall not exceed 6% per NA7.5.3 required for these systems?	No

STATE OF CALIFORNIA
Mechanical Systems
CALIFORNIA ENERGY COMMISSION

CERTIFICATE OF COMPLIANCE		NRCC-MCH-E
Project Name: Perris Fire Station	**Report Page:**	**(Page 53 of 65)**
	Date Prepared:	11/26/2025

O. DECLARATION OF REQUIRED CERTIFICATES OF ACCEPTANCE
Selections have been made based on information provided in previous tables of this document. If any selection needs to be changed, please explain why in Table E Additional Remarks. These documents must be provided to the building inspector during construction and can be found online at https://www.energy.ca.gov/title24/2019standards/2019_compliance_documents/Nonresidential_Documents/NRCA/

STATE OF CALIFORNIA
Mechanical Systems
CALIFORNIA ENERGY COMMISSION

CERTIFICATE OF COMPLIANCE		NRCC-MCH-E
Project Name: Perris Fire Station	**Report Page:**	**(Page 52 of 65)**
	Date Prepared:	11/26/2025

N. DECLARATION OF REQUIRED CERTIFICATES OF INSTALLATION
Selections have been made based on information provided in previous tables of this document. If any selection needs to be changed, please explain why in Table E Additional Remarks. These documents must be provided to the building inspector during construction and can be found online at https://www.energy.ca.gov/title24/2019standards/2019_compliance_documents/Nonresidential_Documents/NRCI/
Form/Title
NRCI-MCH-01-E - Must be submitted for all buildings

STATE OF CALIFORNIA
Mechanical Systems
CALIFORNIA ENERGY COMMISSION

CERTIFICATE OF COMPLIANCE		NRCC-MCH-E
Project Name: Perris Fire Station	**Report Page:**	**(Page 51 of 65)**
	Date Prepared:	11/26/2025

L. DISTRIBUTION (DUCTWORK and PIPING)			
		Dwelling Units: Total duct leakage of duct system shall not exceed 12% or duct system to outside shall not exceed 6% per RA3.1.4 required for systems?	No
		Duct leakage testing per CMC Section 603.10.1 required for these systems?	Yes
11	No	The scope of the project includes only duct systems serving healthcare facilities	
12	Yes	Duct system provides conditioned air to an occupiable space for a constant volume, single zone, space-conditioning system.	
13	Yes	The space conditioning system serves less than 5,000 ft^2 of conditioned floor area.	
14	No	The combined surface area of the ducts is more than 25% of the total surface area of the entire duct system:	
15		The scope of the project includes extending an existing duct system, which is constructed, insulated or sealed with asbestos.	
16	No	The scope of the project includes an existing duct system that is documented to have been previously sealed as confirmed through field verification and diagnostic testing in accordance with procedures in the Reference Nonresidential Appendix NA2.	
17		All Ductwork and plenums with pressure class ratings shall be constructed to Seal Class A	
18		All ductwork is an extension of an existing duct system	
19		Ductwork serving individual dwelling unit	
20		< 25 ft of new or replacement space conditioning ducts installed	
21	R-8	Duct Insulation R-value	
22			
23			

M. COOLING TOWERS
This section does not apply to this project.

STATE OF CALIFORNIA
Mechanical Systems
CALIFORNIA ENERGY COMMISSION

CERTIFICATE OF COMPLIANCE		NRCC-MCH-E
Project Name: Perris Fire Station	**Report Page:**	**(Page 56 of 65)**
	Date Prepared:	11/26/2025

O. DECLARATION OF REQUIRED CERTIFICATES OF ACCEPTANCE	
NRCA-MCH-02-A - Outdoor Air must be submitted for all newly installed HVAC units. Note: MCH-02-A can be performed in conjunction with MCH-07-A Supply Fan VFD Acceptance (if applicable) since testing activities overlap.	AM048FCMDCG/AA / AM048FEZDCG/AA;

STATE OF CALIFORNIA
Mechanical Systems
CALIFORNIA ENERGY COMMISSION

CERTIFICATE OF COMPLIANCE		NRCC-MCH-E
Project Name: Perris Fire Station	**Report Page:**	**(Page 55 of 65)**
	Date Prepared:	11/26/2025

O. DECLARATION OF REQUIRED CERTIFICATES OF ACCEPTANCE	
	AR09DXDABWKXCV / AR09DXDABWKNCV; AR09DXDABWKXCV / AR09DXDABWKNCV; AR09DXDABWKXCV / AR09DXDABWKNCV; AR09DXDABWKXCV / AR09DXDABWKNCV; AR09DXDABWKXCV / AR09DXDABWKNCV; AR09DXDABWKXCV / AR09DXDABWKNCV; AR09DXDABWKXCV / AR09DXDABWKNCV; AR09DXDABWKXCV / AR09DXDABWKNCV; AR09DXDABWKXCV / AR09DXDABWKNCV; AR09DXDABWKXCV / AR09DXDABWKNCV; 11 - AM048FCMDCG/AA / AM048FEZDCG/AA; 12 - AM048FCMDCG/AA / AM048FEZDCG/AA; 13 - AM048FCMDCG/AA / AM048FEZDCG/AA; 1A - AM048FCMDCG/AA / AM048FEZDCG/AA; 2A - AM036FCMDCG/AA / AM036FEZDCG/AA; 3A - AM048FCMDCG/AA / AM048FEZDCG/AA; 4A - AM048FCMDCG/AA / AM048FEZDCG/AA; 5A -

STATE OF CALIFORNIA
Mechanical Systems
CALIFORNIA ENERGY COMMISSION

CERTIFICATE OF COMPLIANCE		NRCC-MCH-E
Project Name: Perris Fire Station	**Report Page:**	**(Page 54 of 65)**
	Date Prepared:	11/26/2025

O. DECLARATION OF REQUIRED CERTIFICATES OF ACCEPTANCE	
Form/Title	Systems/Spaces To Be Field Verified

STK ARCHITECTURE, INC.
42095 ZEVO DR., TEMECULA, CALIFORNIA 92590-3780
Phone: 951.296.9110 Fax: 951.296.6079 Email: stk@stkinc.com

CONSULTANT:
DESIGN WEST ENGINEERING
MECHANICAL • ELECTRICAL • ENERGY CONSULTANTS
Email: code@designwesteng.com

REVIEWED FOR CODE COMPLIANCE
BUILDING BUREAU SOLUTIONS INC.

REGISTERED PROFESSIONAL ENGINEER
STEVEN M. JOHNSON
No. 33209
SIGNED:04/15/2026
MECHANICAL
STATE OF CALIFORNIA

PROJECT ADMINISTERED BY:
CITY OF PERRIS

101 NORTH "D" STREET
PERRIS, CA 92570

PROJECT NAME:
SOUTH FIRE STATION AND ADMINISTRATIVE BUILDING

PROJECT CIP: F077

2495 MURRIETA ROAD
PERRIS, CA 92585

ISSUE INFORMATION:

DATE:	INFORMATION:
11-26-25	95% CD SUBMITTAL
02-05-26	1 1st PC RESPONSE
02-19-26	2 2nd PC RESPONSE

SHEET INFORMATION:
STK PROJECT NO.: 365-03-25
SCALE: AS NOTED
DATE: NOVEMBER 2025
PLOT DATE: –
DRAWN BY: JG / JW

SEAL:

SHEET TITLE:
ENERGY COMPLIANCE DOCUMENTS

SHEET NO.:
M5.10

25-114

04/14/2026 6:47PM R:_PROJECT\2025\25-114 Perris Fire Station_CAD\25-114 M-ENV-sheets.dwg

STATE OF CALIFORNIA
Mechanical Systems
CALIFORNIA ENERGY COMMISSION

CERTIFICATE OF COMPLIANCE			NRCC-MCH-E
Project Name:	Perris Fire Station	**Report Page:**	**(Page 59 of 65)**
		Date Prepared:	11/26/2025

O. DECLARATION OF REQUIRED CERTIFICATES OF ACCEPTANCE	
	AR09DXDABWKXCV / AR09DXDABWKNCV; AR09DXDABWKXCV / AR09DXDABWKNCV; AR09DXDABWKXCV / AR09DXDABWKNCV; AR09DXDABWKXCV / AR09DXDABWKNCV; AR09DXDABWKXCV / AR09DXDABWKNCV; AR09DXDABWKXCV / AR09DXDABWKNCV; AR09DXDABWKXCV / AR09DXDABWKNCV; AR09DXDABWKXCV / AR09DXDABWKNCV; AR09DXDABWKXCV / AR09DXDABWKNCV; AR09DXDABWKXCV / AR09DXDABWKNCV; 11 - AM048FCMDCG/AA / AM048FEZDCG/AA; 12 - AM048FCMDCG/AA / AM048FEZDCG/AA; 13 - AM048FCMDCG/AA / AM048FEZDCG/AA; 1A - AM048FCMDCG/AA / AM048FEZDCG/AA; 2A - AM036FCMDCG/AA / AM036FEZDCG/AA; 3A - AM048FCMDCG/AA / AM048FEZDCG/AA; 4A - AM048FCMDCG/AA / AM048FEZDCG/AA; 5A -

STATE OF CALIFORNIA
Mechanical Systems
CALIFORNIA ENERGY COMMISSION

CERTIFICATE OF COMPLIANCE			NRCC-MCH-E
Project Name:	Perris Fire Station	**Report Page:**	**(Page 58 of 65)**
		Date Prepared:	11/26/2025

O. DECLARATION OF REQUIRED CERTIFICATES OF ACCEPTANCE	
NRCA-MCH-03-A - Constant Volume Single Zone HVAC NOTE: This form does not automatically move to "Yes'. If Constant Volume Single Zone HVAC Systems are included in the scope, permit applicant should move this form to "Yes".	AM048FCMDCG/AA / AM048FEZDCG/AA;

STATE OF CALIFORNIA
Mechanical Systems
CALIFORNIA ENERGY COMMISSION

CERTIFICATE OF COMPLIANCE			NRCC-MCH-E
Project Name:	Perris Fire Station	**Report Page:**	**(Page 57 of 65)**
		Date Prepared:	11/26/2025

O. DECLARATION OF REQUIRED CERTIFICATES OF ACCEPTANCE	
	AR09DXDABWKXCV / AR09DXDABWKNCV; AR09DXDABWKXCV / AR09DXDABWKNCV; AR09DXDABWKXCV / AR09DXDABWKNCV; AR09DXDABWKXCV / AR09DXDABWKNCV; AR09DXDABWKXCV / AR09DXDABWKNCV; AR09DXDABWKXCV / AR09DXDABWKNCV; AR09DXDABWKXCV / AR09DXDABWKNCV; AR09DXDABWKXCV / AR09DXDABWKNCV; AR09DXDABWKXCV / AR09DXDABWKNCV; AR09DXDABWKXCV / AR09DXDABWKNCV; 11 - AM048FCMDCG/AA / AM048FEZDCG/AA; 12 - AM048FCMDCG/AA / AM048FEZDCG/AA; 13 - AM048FCMDCG/AA / AM048FEZDCG/AA; 1A - AM048FCMDCG/AA / AM048FEZDCG/AA; 2A - AM036FCMDCG/AA / AM036FEZDCG/AA; 3A - AM048FCMDCG/AA / AM048FEZDCG/AA; 4A - AM048FCMDCG/AA / AM048FEZDCG/AA; 5A -

STATE OF CALIFORNIA
Mechanical Systems
CALIFORNIA ENERGY COMMISSION

CERTIFICATE OF COMPLIANCE			NRCC-MCH-E
Project Name:	Perris Fire Station	**Report Page:**	**(Page 62 of 65)**
		Date Prepared:	11/26/2025

O. DECLARATION OF REQUIRED CERTIFICATES OF ACCEPTANCE	
NRCA-MCH-16-A Supply Air Temperature Reset Controls	AM048FCMDCG/AA / AM048FEZDCG/AA;

STATE OF CALIFORNIA
Mechanical Systems
CALIFORNIA ENERGY COMMISSION

CERTIFICATE OF COMPLIANCE			NRCC-MCH-E
Project Name:	Perris Fire Station	**Report Page:**	**(Page 61 of 65)**
		Date Prepared:	11/26/2025

O. DECLARATION OF REQUIRED CERTIFICATES OF ACCEPTANCE	
	AR09DXDABWKXCV / AR09DXDABWKNCV; AR09DXDABWKXCV / AR09DXDABWKNCV; AR09DXDABWKXCV / AR09DXDABWKNCV; AR09DXDABWKXCV / AR09DXDABWKNCV; AR09DXDABWKXCV / AR09DXDABWKNCV; AR09DXDABWKXCV / AR09DXDABWKNCV; AR09DXDABWKXCV / AR09DXDABWKNCV; AR09DXDABWKXCV / AR09DXDABWKNCV; AR09DXDABWKXCV / AR09DXDABWKNCV; AR09DXDABWKXCV / AR09DXDABWKNCV; 11 - AM048FCMDCG/AA / AM048FEZDCG/AA; 12 - AM048FCMDCG/AA / AM048FEZDCG/AA; 13 - AM048FCMDCG/AA / AM048FEZDCG/AA; 1A - AM048FCMDCG/AA / AM048FEZDCG/AA; 2A - AM036FCMDCG/AA / AM036FEZDCG/AA; 3A - AM048FCMDCG/AA / AM048FEZDCG/AA; 4A - AM048FCMDCG/AA / AM048FEZDCG/AA; 5A -

STATE OF CALIFORNIA
Mechanical Systems
CALIFORNIA ENERGY COMMISSION

CERTIFICATE OF COMPLIANCE			NRCC-MCH-E
Project Name:	Perris Fire Station	**Report Page:**	**(Page 60 of 65)**
		Date Prepared:	11/26/2025

O. DECLARATION OF REQUIRED CERTIFICATES OF ACCEPTANCE	
NRCA-MCH-11-A Automatic Demand Shed Controls	AM048FCMDCG/AA / AM048FEZDCG/AA;

STATE OF CALIFORNIA
Mechanical Systems
CALIFORNIA ENERGY COMMISSION

CERTIFICATE OF COMPLIANCE			NRCC-MCH-E
Project Name:	Perris Fire Station	**Report Page:**	**(Page 65 of 65)**
Project Address:	101 North D Street	**Date Prepared:**	11/26/2025

DOCUMENTATION AUTHOR'S DECLARATION STATEMENT	
I certify that this Certificate of Compliance documentation is accurate and complete.	
Documentation Author Name: Steve Johnson	Documentation Author Signature: Steven Johnson
Company: Design West Engineering	Signature Date: 2025-11-26
Address: 412 E. Vanderbilt Way	CEA/ HERS Certification Identification (if applicable): 33209
City/State/Zip: San Bernardino CA 92408	Phone: 909-890-3700

RESPONSIBLE PERSON'S DECLARATION STATEMENT

I certify the following under penalty of perjury, under the laws of the State of California:

1. The information provided on this Certificate of Compliance is true and correct.
2. I am eligible under Division 3 of the Business and Professions Code to accept responsibility for the building design or system design identified on this Certificate of Compliance (responsible designer)
3. The energy features and performance specifications, materials, components, and manufactured devices for the building design or system design identified on this Certificate of Compliance conform to the requirements of Title 24, Part 1 and Part 6 of the California Code of Regulations.
4. The building design features or system design features identified on this Certificate of Compliance are consistent with the information provided on other applicable compliance documents, worksheets, calculations, plans and specifications submitted to the enforcement agency for approval with this building permit application.
5. I will ensure that a completed signed copy of this Certificate of Compliance shall be made available with the building permit(s) issued for the building, and made available to the enforcement agency for all applicable inspections. I understand that a completed signed copy of this Certificate of Compliance is required to be included with the documentation the builder provides to the building owner at occupancy.

Responsible Designer Name: Steven Johnson	Responsible Designer Signature: Steven Johnson
Company: Design West Engineering	Date Signed: 2025-11-26
Address: 412 East Vanderbilt Way	License: 33209
City/State/Zip: San Bernardino CA 92408	Phone: 909-890-3700

STATE OF CALIFORNIA
Mechanical Systems
CALIFORNIA ENERGY COMMISSION

CERTIFICATE OF COMPLIANCE			NRCC-MCH-E
Project Name:	Perris Fire Station	**Report Page:**	**(Page 64 of 65)**
		Date Prepared:	11/26/2025

O. DECLARATION OF REQUIRED CERTIFICATES OF ACCEPTANCE	
NRCA-MCH-18-A Energy Management Control Systems	AM048FCMDCG/AA / AM048FEZDCG/AA;

P. DECLARATION OF REQUIRED CERTIFICATES OF VERIFICATION
There are no NRCV forms required for this project.

Q. MANDATORY MEASURES DOCUMENTATION LOCATION

This table is used to indicate where mandatory measures are documented in the plan set or construction documentation.

01		02
Compliance with Mandatory Measures documented through MCH Mandatory Measures Note Block	Yes	Plan sheet or construction document location M-Sheets

STATE OF CALIFORNIA
Mechanical Systems
CALIFORNIA ENERGY COMMISSION

CERTIFICATE OF COMPLIANCE			NRCC-MCH-E
Project Name:	Perris Fire Station	**Report Page:**	**(Page 63 of 65)**
		Date Prepared:	11/26/2025

O. DECLARATION OF REQUIRED CERTIFICATES OF ACCEPTANCE	
	AR09DXDABWKXCV / AR09DXDABWKNCV; AR09DXDABWKXCV / AR09DXDABWKNCV; AR09DXDABWKXCV / AR09DXDABWKNCV; AR09DXDABWKXCV / AR09DXDABWKNCV; AR09DXDABWKXCV / AR09DXDABWKNCV; AR09DXDABWKXCV / AR09DXDABWKNCV; AR09DXDABWKXCV / AR09DXDABWKNCV; AR09DXDABWKXCV / AR09DXDABWKNCV; AR09DXDABWKXCV / AR09DXDABWKNCV; AR09DXDABWKXCV / AR09DXDABWKNCV; 11 - AM048FCMDCG/AA / AM048FEZDCG/AA; 12 - AM048FCMDCG/AA / AM048FEZDCG/AA; 13 - AM048FCMDCG/AA / AM048FEZDCG/AA; 1A - AM048FCMDCG/AA / AM048FEZDCG/AA; 2A - AM036FCMDCG/AA / AM036FEZDCG/AA; 3A - AM048FCMDCG/AA / AM048FEZDCG/AA; 4A - AM048FCMDCG/AA / AM048FEZDCG/AA; 5A -

STK ARCHITECTURE, INC.
42095 ZEVO DR., TEMECULA, CALIFORNIA 92590-3780
Phone: 951.296.9110 Fax: 951.296.6079 Email: stk@stkinc.com

CONSULTANT:

REVIEWED FOR CODE COMPLIANCE
BUILDING BUREAU SOLUTIONS INC.

DESIGN WEST ENGINEERING
MECHANICAL • ELECTRICAL • ENERGY CONSULTANTS
Email: code@designwesteng.com

REGISTERED PROFESSIONAL ENGINEER STEVEN M. JOHNSON No. 33209 SIGNED:04/15/2026 MECHANICAL STATE OF CALIFORNIA

PROJECT ADMINISTERED BY:

CITY OF PERRIS

101 NORTH "D" STREET
PERRIS, CA 92570

PROJECT NAME:

SOUTH FIRE STATION AND ADMINISTRATIVE BUILDING

PROJECT CIP: F077

2495 MURRIETA ROAD
PERRIS, CA 92585

ISSUE INFORMATION:

DATE:	INFORMATION:
11-26-25	95% CD SUBMITTAL
02-05-26	△1 1st PC RESPONSE
02-19-26	△2 2nd PC RESPONSE

SHEET INFORMATION:

STK PROJECT NO.: 365-03-25
SCALE: AS NOTED
DATE: NOVEMBER 2025
PLOT DATE: –
DRAWN BY: JG / JW

SEAL:

SHEET TITLE:
ENERGY COMPLIANCE DOCUMENTS

SHEET NO.:
M5.11

25-114

R:_PROJECT\2025\25-114 Perris Fire Station_CAD\25-114 M-ENV-sheets.dwg 04/14/2026 6:47PM

STATE OF CALIFORNIA
Nonresidential Building Commissioning
CALIFORNIA ENERGY COMMISSION

CERTIFICATE OF COMPLIANCE		NRCC-CXR-E
Project Name: Perris Fire Station	**Report Page:**	**(Page 3 of 7)**
	Date Prepared:	2026-01-29T18:21:16-05:00

F. DESIGN REVIEW KICKOFF MEETING

This table indicates that the design reviewer meets the qualification requirements per Title 24, Part 1 Section 10-103(a)1 and demonstrates compliance with design review kickoff requirements per §120.8(d)2. This meeting should occur during the Schematic Design phase of the project.

Design Review Kickoff Meeting Details

01	Date of Design Review Kickoff Meeting			2026-01-29
02	Meeting Attendees: (one person may play multiple roles)			
☐	Owner/Facility Manager:		☐ Design Reviewer(s)	
☐	Project Manager:		☒ Design Architect/ Engineer(s):	Tony Finaldi
☐	Contractor:		☐ Certified Acceptance Test Tech(s):	
☒	Commissioning Provider:	Darrell Johnson	☐ Energy/ T24 Part 6 Consultant:	

Design Reviewer Qualifications per Title 24 Part 1 Section 10-103(a)1

	The design reviewer(s) must be licensed professional engineers or licensed architects, or licensed contractors representing services performed by or under the direct supervision of a licensed engineer or architect, as specified in the provisions of Division 3 of the Business and Professions Code.	Do the Design Reviewer(s) meet these qualifications?	
		Yes	No
03	In addition, for buildings with < 10,000 ft², the design reviewer(s) may be the engineer or architect of record. The design reviewer(s) may also be a qualified in-house engineer or architect with no other project involvement or a third party engineer, architect or contractor.	●	○
04	The design reviewer(s) for this project will be:	Darrell Johnson	

Preliminary Construction Schedule

		Start Date	Completion Date
05	Schematic Design	2024-01-01	2025-05-01
06	Design Development	2025-06-01	2025-09-23
07	Construction Documents	2025-09-30	2026-02-28
08	Construction	2026-04-01	2028-01-01
09	Building Turnover	2028-03-01	2028-07-01
Project Goals Related to Energy Efficiency			
10	Operational Costs	Desired by owner to have energy efficient systems, while being cost effective long term.	
11	Desired Building Lifespan	Using materials capable of lasting at least 50 years.	

STATE OF CALIFORNIA
Nonresidential Building Commissioning
CALIFORNIA ENERGY COMMISSION

CERTIFICATE OF COMPLIANCE		NRCC-CXR-E
Project Name: Perris Fire Station	**Report Page:**	**(Page 2 of 7)**
	Date Prepared:	2026-01-29T18:21:16-05:00

C. COMPLIANCE RESULTS

Table C will indicate if the project data input into the compliance document is compliant with commissioning requirements per §120.8. This table is not editable by the user. If any cell on this table says "DOES NOT COMPLY" or "COMPLIES with Exceptional Conditions" refer to Table D. for guidance.

01	02	03	04	05	06	07	08	09
Design Kickoff Review	Owner's Project Requirements	Basis of Design	Design Review	Commissioning Plan	Functional Performance Testing	Documentation and Training	Commissioning Report	Compliance Results
Table F	Table G	Table H	Table I	Table J	Table K	Table L	Table M	
Yes			Yes					COMPLIES
10	Design Reviewer(s) for the project include:			Darrell Johnson				COMPLIES

D. EXCEPTIONAL CONDITIONS

This table is auto-filled with uneditable comments because of selections made or data entered in tables throughout the form.

Table I. indicates that a Design Review document is attached to the permit application.

E. ADDITIONAL REMARKS

This table includes remarks made by the permit applicant to the Authority Having Jurisdiction.

STATE OF CALIFORNIA
Nonresidential Building Commissioning
CALIFORNIA ENERGY COMMISSION

CERTIFICATE OF COMPLIANCE	NRCC-CXR-E
This document is used to demonstrate compliance with mandatory commissioning requirements in §120.8 for nonresidential buildings and hotel/motel or mixed-use buildings with nonresidential spaces. This document does not demonstrate compliance with commissioning requirements within Title 24, Part 11, which need to be documented separately if they apply.	
Project Name: Perris Fire Station	**Report Page:** (Page 1 of 7)
Project Address:	**Date Prepared:** 2026-01-29T18:21:16-05:00

A. GENERAL INFORMATION

01	Project Location (city)	Perris	04	Building Size (ft²)	5000
02	Occupancy Type	Nonresidential	05	Nonresidential Conditioned Floor Area (ft²)	< 10,000 ft²
03	Project Type	Newly constructed	06	HVAC System Type	
			07	Climate Zone	10

B. PROJECT SCOPE

Based on project information provided in Table A, Table B indicates which commissioning related requirements apply per §120.8. Table B is not editable by the user.

Commissioning Requirements per §120.8

01	Table F: Design Review Kickoff	§120.8(d)1 and §120.8(d)2	The design review kickoff meeting establishes who will play the role of the design reviewer, the project schedule and identify owner's requirements. This meeting should be conducted during schematic design.
02	Table G: Owner's Project Requirements (OPR)	§120.8(b)	This requirement does not apply.
03	Table H: Basis of Design (BOD)	§120.8(c)	This requirement does not apply.
04	Table I: Design Review	§120.8(d) and §120.8(e)	The design reviewer(s) reviews the construction documents for clarity, completeness, and adherence to the owner's goals. Commissioning measures must be included in the construction documents to facilitate the design review and commissioning process. For projects with >= 10,000 ft² of nonresidential conditioned floor area, the design review is for adherence with the Owner's Project Requirements (OPR) and Basis of Design (BOD). This should be conducted during design.
05	Table J: Commissioning Plan	§120.8(f)	This requirement does not apply.
06	Table K: Functional Performance Testing	§120.8(g)	This requirement does not apply.
07	Table L: Documentation and Training	§120.8(h)	This requirement does not apply.
08	Table M: Commissioning Report	§120.8(i)	This requirement does not apply.

STATE OF CALIFORNIA
Nonresidential Building Commissioning
CALIFORNIA ENERGY COMMISSION

CERTIFICATE OF COMPLIANCE		NRCC-CXR-E
Project Name: Perris Fire Station	**Report Page:**	**(Page 6 of 7)**
	Date Prepared:	2026-01-29T18:21:16-05:00

L. DOCUMENTATION AND TRAINING

This section does not apply to this project.

M. COMMISSIONING REPORT

This section does not apply to this project.

N. DECLARATION OF REQUIRED CERTIFICATES OF INSTALLATION

There are no forms required for this project.

O. DECLARATION OF REQUIRED CERTIFICATES OF ACCEPTANCE

There are no forms required for this project.

STATE OF CALIFORNIA
Nonresidential Building Commissioning
CALIFORNIA ENERGY COMMISSION

CERTIFICATE OF COMPLIANCE		NRCC-CXR-E
Project Name: Perris Fire Station	**Report Page:**	**(Page 5 of 7)**
	Date Prepared:	2026-01-29T18:21:16-05:00

F. DESIGN REVIEW KICKOFF MEETING

20	Operations and Maintenance	Building occupants shall receive a general orientation to the building systems that affect their comfort, health, and energy use. Occupant training shall focus on: Basic understanding of how the HVAC systems provide heating, cooling, and ventilation. Proper use of thermostats or local control devices, where provided. Awareness of ventilation features, such as energy recovery systems, and their role in indoor air quality. Training shall be presented in a clear, non-technical manner appropriate for non-facility staff. The intent of occupant training is to promote comfort, reduce unnecessary service calls, and encourage responsible energy use without requiring occupants to understand system-level details.

G. OWNER'S PROJECT REQUIREMENTS (OPR)

This section does not apply to this project.

H. BASIS OF DESIGN (BOD)

This section does not apply to this project.

I. CONSTRUCTION DOCUMENT DESIGN REVIEW CHECKLIST

This table is only completed if a design review document is not attached to permit application to demonstrate compliance with §120.8(b) and §120.8(e). For buildings with >= 10,000 ft² conditioned floor area, the design review will ensure the construction documents meet the Owner's Project Requirements (Table G.) and the Basis of Design Documents (Table H.). For buildings with < 10,000 ft² conditioned floor area, the design review will ensure the construction documents meet the goals documented in Table F. during the Design Review Kickoff.

		YES	NO
01	Attaching Completed Design Review Documentation?	●	○

J. COMMISSIONING PLAN

This section does not apply to this project.

K. FUNCTIONAL PERFORMANCE TESTING

This section does not apply to this project.

STATE OF CALIFORNIA
Nonresidential Building Commissioning
CALIFORNIA ENERGY COMMISSION

CERTIFICATE OF COMPLIANCE		NRCC-CXR-E
Project Name: Perris Fire Station	**Report Page:**	**(Page 4 of 7)**
	Date Prepared:	2026-01-29T18:21:16-05:00

F. DESIGN REVIEW KICKOFF MEETING

12	Equipment Lifecycle	Verify that HVAC systems and associated controls are installed in accordance with the approved construction documents, manufacturer's recommendations, and applicable codes and standards. Confirm that equipment is properly sized, located, and accessible to support long-term maintenance and serviceability. Ensure that factory startup, field installation, and pre-functional testing of fan coils, condensing units, ERVs, and exhaust systems are completed and documented prior to functional performance testing. Validate that system airflow, ventilation rates, energy recovery operation, and exhaust performance meet design intent and regulatory requirements.
13	Project Energy Efficiency Goals	From the Building Owner's perspective, the primary energy efficiency goal of this project is to minimize overall energy consumption while maintaining occupant comfort, indoor air quality, and long-term operational reliability. The building is intended to perform at or better than the energy efficiency requirements of the applicable energy code, with an emphasis on cost-effective, durable solutions that reduce lifecycle energy use and operating costs.
14	Envelope Goals	The Building Owner recognizes that the building envelope—including the roof, exterior walls, windows, and floors—plays a critical role in overall energy performance, occupant comfort, and long-term durability. The Owner's efficiency goals for the building envelope are focused on reducing heat gain and heat loss, supporting efficient HVAC operation, and maintaining a comfortable indoor environment.
15	HVAC System Goals	The Building Owner requires heating, cooling, and ventilation systems that provide reliable occupant comfort, good indoor air quality, and efficient operation throughout the building's anticipated occupancy patterns. The systems shall be designed to support normal operating schedules while maintaining flexibility for occasional after-hours use.
16	Indoor Lighting System Goals	The Building Owner desires indoor lighting systems that provide safe, comfortable, and appropriate illumination for building occupants while minimizing energy consumption and supporting long-term operational efficiency. The lighting systems shall be designed to enhance occupant productivity and visual comfort while complying with applicable codes and standards.
17	Outdoor Lighting System Goals	The Building Owner desires outdoor lighting systems that enhance safety, security, and site usability while minimizing energy consumption and light pollution. Outdoor lighting shall be designed to provide appropriate illumination for building entrances, walkways, parking areas, and service areas without excessive brightness or glare.
18	Water Heating System Goals	The Building Owner desires water heating systems that provide reliable service, support occupant needs, and operate efficiently throughout the life of the building. The water heating systems shall be designed to balance energy efficiency, durability, and ease of operation while meeting applicable codes and usage demands.
19	Equipment and System Specifications	Fan coil units, condensing units, energy recovery ventilators, and exhaust fans shall be of commercial-grade construction, designed for continuous operation where required. Equipment shall be manufactured by established vendors with a documented history of performance in similar applications. Components shall be designed to minimize noise and vibration and support occupant comfort. Equipment shall be selected with adequate turndown and part-load performance to efficiently serve varying load conditions.

STATE OF CALIFORNIA
Nonresidential Building Commissioning
CALIFORNIA ENERGY COMMISSION

CERTIFICATE OF COMPLIANCE		NRCC-CXR-E
Project Name: Perris Fire Station	**Report Page:**	**(Page 7 of 7)**
Project Address: 2495 Murrieta road, Perris, CA 92585	**Date Prepared:**	2026-01-29T18:21:16-05:00

DOCUMENTATION AUTHOR'S DECLARATION STATEMENT

I certify that this Certificate of Compliance documentation is accurate and complete.

Documentation Author Name: Darrell Johnson	Documentation Author Signature: Darrell Johnson
Company: Design West Engineering	Signature Date: 02/04/2026
Address: 412 E Vanderbilt Way	CEA/AEA/CCC Certification Identification (if applicable):
City/State/Zip: San Bernardino, CA, 92408	Phone:

RESPONSIBLE PERSON'S DECLARATION STATEMENT

I certify the following under penalty of perjury, under the laws of the State of California:

1. The information provided on this Certificate of Compliance is true and correct.
2. I am eligible under Division 3 of the Business and Professions Code to accept responsibility for the building design or system design identified on this Certificate of Compliance (responsible designer)
3. The energy features and performance specifications, materials, components, and manufactured devices for the building design or system design identified on this Certificate of Compliance conform to the requirements of Title 24, Part 1 and Part 6 of the California Code of Regulations.
4. The building design features or system design features identified on this Certificate of Compliance are consistent with the information provided on other applicable compliance documents, worksheets, calculations, plans and specifications submitted to the enforcement agency for approval with this building permit application.
5. I will ensure that a completed signed copy of this Certificate of Compliance shall be made available with the building permit(s) issued for the building, and made available to the enforcement agency for all applicable inspections. I understand that a completed signed copy of this Certificate of Compliance is required to be included with the documentation the builder provides to the building owner at occupancy.

Responsible Person Name: Antonio Finaldi	Responsible Person Signature:
Responsible Person Scope: Architect	
Company: STK Architecture, Inc.	Date Signed: 03/30/2026
Address: 42095 Zevo Drive, A-15	License: C31476
City/State/Zip: Temecula, CA 92596	Phone: (951) 296-9110

STK ARCHITECTURE, INC.
42095 ZEVO DR., TEMECULA, CALIFORNIA 92590-3780
Phone: 951.296.9110 Fax: 951.296.6079 Email: stk@stkinc.com

CONSULTANT:

REVIEWED FOR CODE COMPLIANCE

THESE DRAWINGS AND DOCUMENTS HAVE BEEN REVIEWED AND FOUND TO BE IN SUBSTANTIAL COMPLIANCE WITH APPLICABLE CODES AND REGULATIONS. THIS REVIEW IS LIMITED TO CODE COMPLIANCE ONLY AND IS SUBJECT TO ALL CORRECTIONS WHICH MAY BE REQUIRED BY THE BUILDING OFFICIAL. THE CONTRACTOR IS RESPONSIBLE FOR CONSTRUCTION IN COMPLIANCE WITH ALL APPLICABLE CODES AND REGULATIONS. NOR

GENERAL NOTES - RESIDENCE

1. THE ELECTRICAL SYSTEM SHALL BE GROUNDED BY UFER W/ BONDS TO GAS AND WATER PIPING AS APPLICABLE. REFER TO SINGLE LINE DIAGRAM.
2. ELECTRICAL SERVICE TO ALL FIXED APPLIANCES SHALL BE PER CODE, IN CONDUIT WHERE REQUIRED.
3. REFERENCE MECHANICAL SHEETS FOR ADDITIONAL INFORMATION AND EXACT LOCATION OF MECHANICAL AND PLUMBING EQUIPMENT SHOWN.
4. CONTRACTOR IS TO PULL ALL POWER CONDUCTORS TO MECHANICAL AND PLUMBING EQUIPMENT AND IS TO MAKE FINAL ELECTRICAL HOOK UP.
5. CONTRACTOR IS TO PROVIDE ALL MECHANICAL AND PLUMBING POWER AND CONTROL CONDUIT.
6. WORKING CLEARANCE FOR A MECHANICAL UNIT IS 30" x 36" x 6'8" MIN.
7. ELECTRICAL EQUIPMENT REQUIRING ELECTRICAL CONNECTIONS OF MORE THAN 50 VOLTS SHALL HAVE A POSITIVE MEANS OF DISCONNECT ADJACENT TO AND IN SIGHT FROM THE EQUIPMENT SERVED. PROVIDE DISCONNECT(S) AT A/C UNITS. DO NOT INSTALL DISCONNECTS BEHIND EQUIPMENT.
8. ALL NON-IC RATED LIGHTING FIXTURES REQUIRE THAT INSULATION BE KEPT A MINIMUM OF AT LEAST 3" FROM ALL SIDES. THIS MAY BE ACCOMPLISHED BY CHICKEN WIRE OR SHEET ROCK, SUBJECT TO THE APPROVAL OF THE FIELD INSPECTOR.
9. KITCHEN LIGHTING: LIGHTING FIXTURES FOR GENERAL LIGHTING IN KITCHENS SHALL HAVE LAMPS WITH AN EFFICACY OF NOT LESS THAN 40 LUMENS PER WATT (LED/FLUORESCENT). GENERAL LIGHTING MUST PROVIDE A SUFFICIENT LIGHT LEVEL FOR BASIC KITCHEN TASKS AND PROVIDE A UNIFORM PATTERN OF ILLUMINATION. A LUMINAIRE(S) THAT IS (ARE) THE ONLY LIGHTING IN A KITCHEN WILL BE CONSIDERED GENERAL LIGHTING. GENERAL LIGHTING SHALL BE CONTROLLED BY A READILY ACCESSIBLE SWITCH AT AN ENTRANCE TO THE KITCHEN. ADDITIONAL LIGHTING FIXTURES TO BE USED ONLY FOR SPECIFIC DECORATIVE EFFECTS NEED NOT MEET THIS REQUIREMENT. LIGHTING FIXTURES INSTALLED TO MEET THE 40 LUMENS PER WATT (LED/FLUORESCENT) OF SECTION 150(k) 1. OR 2. SHALL NOT CONTAIN MEDIUM BASE INCANDESCENT LAMP SOCKETS, AND SHALL BE ON SEPARATE SWITCHES FROM ANY INCANDESCENT LIGHTING.
10. BATHROOM LIGHTING: EACH ROOM CONTAINING A SHOWER OR BATHTUB SHALL HAVE AT LEAST ONE LUMINAIRE WITH LAMP(S) WITH AN EFFICACY OF 40 LUMENS PER WATT OR GREATER (LED/FLUORESCENT). IF THERE IS MORE THAN ONE LUMINAIRE IN THE ROOM, THE HIGH EFFICACY LUMINAIRE SHALL BE SEPARATELY SWITCHED AT AN ENTRANCE TO THE ROOM. ALL OTHER LIGHTING INSTALLED IN EACH BATHROOM SHALL BE HIGH EFFICACY OR CONTROLLED BY A VACANCY SENSOR.
11. LIGHTING OTHER THAN IN KITCHENS, BATHROOMS, GARAGES, LAUNDRY ROOMS, AND UTILITY ROOMS. LIGHTING INSTALLED IN ROOMS OR AREAS OTHER THAN IN KITCHENS, BATHROOMS, GARAGES, LAUNDRY ROOMS, AND UTILITY ROOMS SHALL BE HIGH EFFICACY, OR SHALL BE CONTROLLED BY EITHER DIMMERS OR VACANCY SENSORS.
12. LIGHTING FIXTURES, LIGHTING OUTLETS, AND/OR CEILING FANS LOCATED OVER A SPA OR HOT TUB OR WITHIN 5 FEET OF THE INSIDE WALLS OF THE SPA OR HOT TUB SHALL BE A MINIMUM OF 7'-6" ABOVE THE MAXIMUM WATER LEVEL AND SHALL BE PROTECTED BY A GROUND-FAULT CIRCUIT-INTERRUPTER (CEC 680-40(b)(1)).
13. ALL PROPOSED LIGHT FIXTURES SHALL BE LISTED FOR THE PROPOSED LOCATION. LIGHTING FIXTURES IN TUB OR SHOWER ENCLOSURES SHALL BE LABELED "SUITABLE FOR DAMP LOCATIONS".
14. ALLOW FOR 4-1/2" DOOR CASING TO ALL SWITCHES.
15. INTERIOR WALL SCONCE LOCATIONS TO BE DETERMINED ON SITE DURING FRAMING.
16. VERIFY ALL VERTICAL DIMENSIONS OF ELECTRICAL OUTLETS AND ELEMENTS TO WORKING CONDITIONS.
17. PROVIDE RECEPTACLE OUTLETS AT EACH WALL COUNTER SO THAT NO POINT ALONG THE WALL LINE IS MORE THAN 24 INCHES, MEASURED HORIZONTALLY FROM A RECEPTACLE OUTLET IN THAT SPACE. (CEC 210-52(C)).
18. PROVIDE IN EVERY KITCHEN, FAMILY ROOM, DINING ROOM, LIVING ROOM, PARLOR LIBRARY, DEN, SUN ROOM, BEDROOM, RECREATION ROOM, OR SIMILAR ROOM OR AREA OF DWELLING UNITS, RECEPTACLE OUTLETS SO THAT NO POINT ALONG THE FLOOR LINE IN ANY WALL SPACE IS MORE THAN 6 FEET, MEASURED HORIZONTALLY, FROM AN OUTLET IN THAT SPACE, INCLUDING ANY WALL SPACE 2 FEET OR MORE IN WIDTH AND THE WALL SPACE OCCUPIED BY FIXED PANELS IN EXTERIOR WALLS, BUT EXCLUDING SLIDING PANELS IN EXTERIOR WALLS, THE WALL SPACE AFFORDED BY FIXED ROOM DIVIDERS, SUCH AS FREESTANDING BAR-TYPE COUNTERS OR RAILINGS, SHALL BE INCLUDED IN THE SIX FOOT MEASUREMENT. (CEC§210-52(A)).
19. PROVIDE AT LEAST TWO 20-AMP SMALL APPLIANCE BRANCH CIRCUITS TO SERVE KITCHEN, BREAKFAST ROOM, AND DINING ROOM. SUCH CIRCUITS SHALL HAVE NO OTHER OUTLETS. (CEC 210-52(B)(1) THROUGH 210-52(B)(3)).
20. PROVIDE AT LEAST ONE 20-AMP BRANCH CIRCUIT TO SERVE BATHROOM RECEPTACLES. SUCH CIRCUIT(S) SHALL HAVE NO OTHER OUTLETS. (CEC 210-11(C)(3), 210-52(D).
21. ALL BRANCH CIRCUITS THAT SUPPLY 125-VOLT, SINGLE PHASE, 15 AND 20 AMPERE RECEPTACLE OUTLETS INSTALLED IN KITCHENS, FAMILY ROOMS, DINING ROOMS, LIVING ROOMS, PARLORS, LIBRARIES, DENS, BEDROOMS, SUN ROOMS, RECREATION ROOMS, CLOSETS, HALLWAYS, LAUNDRY AREAS OR SIMILAR ROOMS OR AND OTHER ROOMS AS INDICATED ON THE PLANS, SHALL BE PROTECTED BY AN ARC-FAULT CIRCUIT INTERRUPTER. ALL DWELLING UNIT BRANCH CIRCUIT AFCI PROTECTION DEVICES MUST BE LISTED AS A "COMBINATION TYPE AFCI."
22. SMOKE ALARM/DETECTORS SHALL SOUND AUDIBLE IN ALL SLEEPING AREAS (CBC SECTION 310.9.1) AND SHALL BE 120-VOLT WITH BATTERY BACKUP. (CBC 310.9.1.3).
23. OPENINGS AROUND ELECTRICAL PENETRATIONS THROUGH FIRE RESISTIVE RATED WALLS, PARTITIONS, FLOORS, OR CEILINGS SHALL BE FIRE STOPPED USING APPROVED METHODS TO MAINTAIN THE FIRE RESISTIVE RATING.
24. ALL 125-VOLT, SINGLE PHASE, 15 - 20 AMPERE RECEPTACLES SHALL HAVE GROUND-FAULT CIRCUIT-INTERRUPTER PROTECTION FOR PERSONNEL IF INSTALLED IN BATHROOMS, GARAGES, OUTDOORS, CRAWL SPACES, UNFINISHED BASEMENTS, LAUNDRY AREA, ABOVE KITCHEN COUNTER TOP OR WITHIN 6' OF A SINK, BATHTUB OR SHOWER STALL. (CEC 210.8)
25. LUMINAIRES RECESSED INTO INSULATED CEILINGS SHALL BE APPROVED FOR ZERO CLEARANCE INSULATION COVER (IC) BY UNDERWRITERS LABORATORIES OR OTHER TESTING/RATING LABORATORIES RECOGNIZED BY THE INTERNATIONAL CONFERENCE OF BUILDING OFFICIALS, AND SHALL INCLUDE A LABEL CERTIFYING AIR TIGHT (AT) OR SIMILAR DESIGNATION TO SHOW AIR LEAKAGE LESS THAN 2.0 CFM AT 75 PASCALS (OR 1.57 LBS/FT2) WHEN TESTED IN ACCORDANCE WITH ASTM E283, AND SHALL BE SEALED WITH A GASKET OR CAULK BETWEEN THE HOUSING AND CEILING.
26. PROVIDE AT LEAST ONE GFCI WEATHERPROOF DUPLEX RECEPTACLE OUTLET FOR EACH GRADE LEVEL DWELLING UNIT WITH AN INDIVIDUAL ENTRANCE.
27. IN EVERY KITCHEN, FAMILY ROOM, DINING ROOM, LIVING ROOM, PARLOR, LIBRARY, DEN, SUNROOM, BEDROOM, RECREATION ROOM, BATHROOM, GARAGE, BASEMENT, LAUNDRY AND OUTDOOR AREA, ALL 125-VOLT, 15- AND 20-AMPERE RECEPTACLES SHALL BE LISTED TAMPER RESISTANT RECEPTACLES.

NOTE TO CONTRACTOR

DO NOT SCALE DRAWINGS

CONTRACTOR SHALL VERIFY PLANS AND EXISTING DIMENSIONS AND CONDITIONS ON THE JOB SITE AND SHALL IMMEDIATELY NOTIFY THE ARCHITECT IN WRITING OF ANY DISCREPANCIES BEFORE PROCEEDING WITH THE WORK OR BE RESPONSIBLE FOR THE SAME.

GENERAL NOTES

1. ALL MATERIALS AND WORKMANSHIP SHALL CONFORM TO THE LATEST CODE OF FEDERAL REGULATIONS (CFR), NATIONAL ELECTRICAL CODE EDITION AND ALL APPLICABLE LOCAL CODES AND REGULATIONS.
2. ALL WORK IS NEW UNLESS NOTED OTHERWISE.
3. ALL PANELS, SWITCHES, ETC. SHALL HAVE SUFFICIENT GUTTER SPACE AND LUGS IN COMPLIANCE TO UL REQUIREMENTS TO ACCOMMODATE CONDUCTORS SHOWN.
4. WHERE WIRE SIZES ARE INDICATED ON PLANS, FOR INDIVIDUAL CIRCUITS, THE WIRE SIZE INDICATED SHALL APPLY TO THE COMPLETE CIRCUIT, UNLESS OTHERWISE NOTED.
5. WHERE EXISTING CIRCUITS OR DEVICES ARE DEMOLISHED, MODIFIED, OR REUSED, ENSURE ALL EXISTING ELECTRICAL UTILIZATION DEVICES TO REMAIN ARE ENERGIZED UPON COMPLETION OF WORK.
6. CONTRACTOR SHALL VERIFY THE EXACT LOCATION OF MECHANICAL, PLUMBING AND OTHER EQUIPMENT REQUIRING ELECTRICAL CONNECTION PRIOR TO ANY WORK.
7. CONTRACTOR SHALL EXTEND WIRING FROM ALL JUNCTION BOXES, SWITCHES, ETC. AND MAKE FINAL CONNECTION AS REQUIRED TO ALL BUILDING EQUIPMENT REQUIRING ELECTRICAL CONNECTIONS.
8. LOCATION OF LOCAL WALL SWITCHES ARE SUBJECT TO MODIFICATIONS. AT OR NEAR DOORS. INSTALL SWITCHES ON SIDE OPPOSITE TO DOOR HINGE. VERIFY FINAL HINGE LOCATION IN FIELD PRIOR TO ANY WORK.
9. DRAWINGS ARE DIAGRAMMATIC AND INDICATE GENERAL ARRANGEMENT OF SYSTEMS AND WORK INCLUDED. FOLLOW DRAWINGS IN LAYING OUT WORK AND CHECK DRAWINGS OR OTHER TRADES RELATING TO WORK TO VERIFY SPACE IN WHICH WORK WILL BE INSTALLED. MAINTAIN HEADROOM AND MINIMUM CODE REQUIRED WORKING CLEARANCES AT ALL TIMES.
10. CONTRACTOR SHALL COORDINATE THE LOCATION OF ALL WALL OUTLET BOXES FOR SWITCHES, BELL/STROBES, FIRE ALARM PULL STATIONS. RECEPTACLES ETC. WITH CABINETS, FURNITURE, EQUIPMENT ETC., TO AVOID CONFLICT.
11. WHERE ELECTRIC MOTORS OR HEATERS ARE INSTALLED IN HUNG CEILINGS, PROVIDE DISCONNECT SWITCH IN HUNG CEILING WITHIN REACH FROM ACCESS POINT.
12. FURNISH APPROVED EXPANSION FITTINGS WHERE RACEWAY CROSSES BUILDING EXPANSION JOINTS.
13. FURNISH PULL STRING IN EACH RACEWAY RUN OVER 10' IN LENGTH, IN WHICH PERMANENT WIRING IS NOT INSTALLED.
14. NOT MORE THAN THREE LIGHTING OR CONVENIENCE OUTLET CIRCUITS ARE PERMITTED IN ONE CONDUIT, PROVIDE SEPARATE CONDUIT FOR EACH HOMERUN INDICATED ON THE DRAWING, UNLESS INDICATED OTHERWISE.
15. PROVIDE PULL BOXES WHEREVER NECESSARY TO FACILITATE PULLING OF CONDUCTORS. COORDINATE LOCATIONS OF BOXES WITH OTHER TRADES TO AVOID CONFLICT. PULL BOXES SHALL BE ACCESSIBLE. THE SIZE OF PULL BOX SHALL COMPLY WITH N.E.C. REQUIREMENTS.
16. OUTLET BOXES FOR FIXTURES RECESSED IN HUNG CEILING SHALL BE ACCESSIBLE THROUGH OPENING CREATED BY REMOVAL OF FIXTURES.
17. SEE MECHANICAL AND PLUMBING DRAWINGS AND SPECIFICATION FOR ADDITIONAL CONNECTION REQUIREMENTS TO CONTROL PANELS, CONTROL TRANSFORMERS, POWER FOR CONTROL SYSTEM EP AND PE SWITCHES, TIME CLOCKS, VALVES, STATS, RELAYS, DUCT SMOKE DETECTOR LOCATIONS, ETC. INDICATED ON CONTROL WIRING DIAGRAMS. ELECTRICAL CONTRACTOR SHALL VERIFY FINAL CONTROL WIRING REQUIREMENTS WITH MECHANICAL AND PLUMBING CONTRACTORS PRIOR TO ANY WORK AND PROVIDE ALL NECESSARY DEVICES AND CONNECTIONS AS REQUIRED.
18. ALL EXTERIOR ELECTRICAL DEVICES AND EQUIPMENT INCLUDING THOSE THAT ARE EXPOSED TO OUTSIDE ENVIRONMENT SHALL BE WEATHERPROOF TYPE, NEMA 3R AND ELECTRICAL DEVICES AND EQUIPMENT INCLUDING THOSE THAT ARE EXPOSED TO DIRECT WATER SPRAY OR IN CORROSIVE LOCATIONS SHALL BE NEMA 4X, REGARDLESS OF ALTERNATE NEMA RATING INDICATED IN NOTES OR SCHEDULES.
19. NO CONDUIT RUNS SHALL BE ALLOWED IN CONCRETE SLABS. ALL CONDUITS WILL BE PLACED ABOVE ACCESSIBLE CEILING SPACES UNLESS SPECIFICALLY INDICATED TO BE UNDERGROUND.
20. LIGHTING, POWER, TELEPHONE AND COMMUNICATIONS OUTLETS SHALL NOT BE PLACED BACK-TO-BACK.
21. WHERE MORE THAN ONE LIGHT SWITCH OCCURS AT SAME LOCATION, SWITCHES SHALL BE MOUNTED IN A MULTIPLE GANG BOX UNDER A SINGLE COVER PLATE. PLATES WITH MORE THAN (3) LIGHT SWITCHES SHALL BE LABELED TO INDICATE THE LIGHT FIXTURES CONTROLLED.
22. DISCONNECT SWITCHES SHALL BE MOUNTED ON INDIVIDUAL SUPPORTS, OR OTHERWISE DIRECTLY ON EQUIPMENT, PROVIDED NO MODIFICATION TO EQUIPMENT IS NECESSARY.
23. ALL ELECTRICAL POWER, LIGHTING, TELEPHONE OR SIGNAL WIRING IN FIRE RATED WALL IS TO BE INSTALLED IN A METALLIC CONDUIT SYSTEM.
24. ALL ELECTRIC MATERIAL SHALL BE LISTED BY "UL" FOR THE TYPE OF APPLICATION AND "UL" LABEL SHALL APPEAR ON ALL ELECTRICAL EQUIPMENT.
25. CONTACT UTILITY COMPANIES FOR SCOPE OF WORK PRIOR TO SUBMITTING BID; INCLUDE UTILITY CHARGES IF ANY.
26. ALL DISTRIBUTION AND CONTROL EQUIPMENT (SUCH AS CB's, SWITCHES, CONTACTORS, ETC.), TERMINATIONS SHALL BE FULLY RATED PER UL AS FOLLOWS:

    a. 100A OR LESS : 60°C OR MORE;
    b. MORE THAN 100A : 75°C OR MORE.
27. ANY ERRORS, OMISSIONS, OR DESIGN DISCREPANCIES ON PLANS OR SPECIFICATIONS SHALL BE BROUGHT TO THE ATTENTION OF THE ELECTRICAL ENGINEER FOR CLARIFICATION OR CORRECTION PRIOR TO CONSTRUCTION AND PREPARATION OF SUBMITTAL PACKAGES.
28. CONDUCTORS SHALL HAVE UNDERWRITER'S LABORATORIES, INC.(UL) LISTED, 600 VOLT INSULATION OF TYPE SPECIFIED BELOW OR ELSEWHERE IN THE SPECIFICATIONS. CONDUCTORS SHALL BE COPPER AND LISTED FOR 90 DEGREE APPLICATIONS.

    1. BRANCH CIRCUITS - LIGHTING AND POWER.

    a. #10 AWG AND SMALLER, STRANDED OR SOLID WIRE TYPE THW OR THHN/THWN-2, THHW (THHN FOR DRY LOCATION ONLY).
    b. #8 AWG TO #2 AWG, STRANDED TYPE THW OR THHN/THHW.
    c. #1 AWG AND LARGER, STRANDED TYPE XHHW-2.

    2. FEEDERS : TYPE THW OR THHN/THWN-2, OR XHHW-2.
29. PROVIDE GREEN INSULATED GROUNDING CONDUCTOR IN EACH RACEWAY INCLUDING CONDUITS, PLUG STRIPS, WIREMOLD. SIZE OF GROUNDING SHALL BE IN ACCORDANCE WITH NATIONAL ELECTRIC CODE ARTICLE 250.
30. WIRING METHOD SHALL BE EMT ABOVE GROUND AND MOUNTED IN CONCEALED SPACES AND SCHEDULE 40 PVC FOR UNDERGROUND INSTALLATION. USE RIGID WHEN ENCASED IN CONCRETE OR SUSCEPTIBLE TO DAMAGE.
31. ALL SWITCH LOCATIONS ARE REQUIRED TO HAVE A NEUTRAL CONDUCTOR PROVIDED AT THE SWITCH LOCATION PER NEC 404.2(C).
32. UNLESS OTHERWISE INDICATED, SHARING OF NEUTRAL/GROUNDED CONDUCTORS AMONG SINGLE PHASE BRANCH CIRCUITS OF DIFFERENT PHASES INSTALLED IN THE SAME RACEWAY IS NOT PERMITTED. PROVIDE DEDICATED NEUTRAL/GROUNDED CONDUCTOR FOR EACH INDIVIDUAL BRANCH CIRCUIT.
33. UNLESS OTHERWISE INDICATED, PROVIDE A SEPARATE SWITCHED AND UNSWITCHED PHASE CONDUCTOR TO ALL CONTROLLED RECEPTACLES REGARDLESS OF RECEPTACLE CONFIGURATION.
34. BASIS OF ELECTRICAL DESIGN LIMITS VOLTAGE DROP TO 2% FOR FEEDERS AND 3% FOR BRANCH CIRCUITS. ANY CHANGES MADE IN THE FIELD SHALL LIMIT VOLTAGE DROP TO THESE PERCENTAGES.
35. BRANCH CIRCUIT CONDUITS SHALL BE CONCEALED IN WALL OR CEILING SPACES. EXPOSED CONDUITS ARE NOT ALLOWED WHERE CONCEALED METHODS ARE AVAILABLE.
36. CONTRACTOR SHALL PROVIDE CONDUCTORS AND CONDUITS REQUIRED FOR ALL BRANCH CIRCUITS AND FEEDERS. FOR CIRCUIT SIZES NOT SHOWN, REFER TO PANEL SCHEDULES FOR CONDUCTOR AND CONDUIT SIZES.
37. ALL EMERGENCY CIRCUITS SHALL BE ENTIRELY INDEPENDENT OF ALL OTHER WIRING AND EQUIPMENT AND SHALL NOT ENTER SAME RACEWAY, BOXES OR CABINETS WITH OTHER WIRING EXCEPT WHERE PROVIDED IN NEC 700.9B.
38. REFER TO LIGHTING CONTROL DETAILS FOR WIRING AND CONDUIT REQUIREMENTS. CONTRACTOR SHALL PROVIDE ALL WIRING AND CONDUITS REQUIRED BY MANUFACTURER TO FIXTURES AND CONTROLS.
39. THE CONTRACTOR SHALL COORDINATE THE WORK WITH OTHER TRADES. ANY COSTS TO INSTALL WORK TO ACCOMPLISH SAID COORDINATION, WHICH DIFFERS FROM THE WORK AS SHOWN ON THE CONTRACT DOCUMENTS, SHALL BE INCURRED BY THE CONTRACTOR. ANY DISCREPANCIES, AMBIGUITIES OR CONFLICTS SHALL BE BROUGHT TO THE ATTENTION OF THE OWNER'S REPRESENTATIVE DURING BID TIME FOR CLARIFICATION. ANY SUCH CONFLICTS NOT CLARIFIED PRIOR TO BID SHALL BE SUBJECT TO THE INTERPRETATION OF THE OWNER'S REPRESENTATIVE AT NO ADDITIONAL COST TO THE OWNER.
40. EXACT ROUTING METHOD AND LOCATION OF CONDUIT PENETRATION AND OPENINGS IN WOOD ROOF DECKS, WALL, FLOORS OR STRUCTURAL STEEL MEMBERS SHALL BE DETERMINED BY THE CONTRACTOR IN FIELD. PERFORM CORING, SAWCUTTING, PATCHING AND REFINISHING OF EXISTING WALLS AND SURFACES WHEREVER IT IS NECESSARY TO PENETRATE. OPENINGS SHALL BE SEALED IN AN APPROVED METHOD TO MEET THE FIRE RATING AND WATER PROOFING REQUIREMENTS OF THE PARTICULAR WALL, FLOOR OR CEILING. ALL FIRE SEALS SHALL BE UL APPROVED. CONTRACTOR SHALL SCAN ALL CONCRETE WALLS AND SLABS FOR THE PRESENCE OF REBAR AND/OR UTILITIES PRIOR TO DRILLING OR CUTTING IF CONCRETE WORK IS INVOLVED. CONTRACTOR SHALL PROVIDE CERTIFICATION OF CALIBRATION OF CONCRETE SCANNING EQUIPMENT PRIOR TO PERFORMING WORK.
41. STUB OUT (2)1" CONDUITS FROM ALL FLUSHED MOUNTED PANELBOARDS INTO ACCESSIBLE CEILING SPACE AND CAP FOR FUTURE USE.
42. ALL 125 AND 250-VOLT, 15- AND 20-AMPERE NONLOCKING TYPE RECEPTACLES SHALL BE LISTED TAMPER RESISTANT RECEPTACLES IN AREAS SPECIFIED IN NEC 406.12.
43. ALL 125-VOLT THROUGH 250-VOLT RECEPTACLES SUPPLIED BY SINGLE-PHASE BRANCH CIRCUITS RATED 150 VOLTS OR LESS TO GROUND, 50 AMPERES OR LESS, AND ALL RECEPTACLES SUPPLIED BY THREE-PHASE BRANCH CIRCUITS RATED 150 VOLTS OR LESS TO GROUND, 100 AMPERES OR LESS, INSTALLED IN THE LOCATIONS SPECIFIED BELOW SHALL HAVE GROUND-FAULT CIRCUIT-INTERRUPTER PROTECTION FOR PERSONNEL AND ANY OTHER AREAS SPECIFIED IN NEC 210.8
    a. BATHROOMS
    b. KITCHENS OR AREAS WITH A SINK AND PERMANENT PROVISIONS FOR EITHER FOOD PREPARATION OR COOKING
    c. ROOFTOPS
    d. OUTDOORS
    e. SINKS — WHERE RECEPTACLES ARE INSTALLED WITHIN 6 FT FROM THE TOP
    f. INDOOR DAMP AND WET LOCATIONS
    g. LOCKER ROOMS WITH ASSOCIATED SHOWERING FACILITIES
    h. GARAGES, ACCESSORY BUILDINGS, SERVICE BAYS, AND SIMILAR AREAS OTHER THAN VEHICLE EXHIBITION HALLS AND SHOWROOMS
    i. CRAWL SPACES — AT OR BELOW GRADE LEVEL
    j. UNFINISHED AREAS OF BASEMENTS
    k. LAUNDRY AREAS
    l. BATHTUBS AND SHOWER STALLS — WHERE RECEPTACLES ARE INSTALLED WITHIN 6 FT OF THE OUTSIDE EDGE OF THE BATHTUB OR SHOWER STALL

ABBREVIATIONS

A	AMPERE
AF	AMPERE FRAME RATING (CIRCUIT BREAKER)
AFC	AVAILABLE FAULT CURRENT
AFF	ABOVE FINISHED FLOOR
AFG	ABOVE FINISHED GRADE
AFU	AMPERE FUSE RATING (FUSE)
AIC	AMPERE INTERRUPTING CAPACITY
AS	AMPERE SWITCH RATING (FUSE)
AT	AMPERE TRIP RATING (CIRCUIT BREAKER)
AWG	AMERICAN WIRE GAUGE
BCG	BARE COPPER GROUND
BKBD	BACKBOARD
BLDG	BUILDING
BKR	BREAKER
C	CONDUIT
CB	CIRCUIT BREAKER
CKT	CIRCUIT
CFSD	COMBINATION FIRE SMOKE DAMPER
CO	CONDUIT ONLY
CT	CURRENT TRANSFORMER
CU	COPPER
CL	CENTERLINE
DISC	DISCONNECT
DSBN	DISTRIBUTION SECTION
DN	DOWN
DWG	DRAWING
EA	EACH
EC	ELECTRICAL CONTRACTOR
EGC	EQUIPMENT GROUNDING CONDUCTOR
EM	EMERGENCY
EMT	ELECTRICAL METALLIC TUBING
EPO	EMERGENCY POWER OFF
EXIST, (E)	EXISTING
EXO	EXTERNAL OPERABLE DISCONNECT
F	FUSE
FA	FIRE ALARM
FACP	FIRE ALARM CONTROL PANEL
FF	FINISHED FLOOR
FG	FINISHED GRADE
FLA	FULL LOAD CURRENT
GEC	GROUNDING ELECTRODE CONDUCTOR
GEN	GENERATOR
GFCI	GROUND FAULT CIRCUIT INTERRUPTER
GFP	GROUND FAULT PROTECTION
GND	GROUND
GRC	GALVANIZED RIGID CONDUIT
HD	HEAVY DUTY
HOA	HAND-OFF-AUTOMATIC
HP	HORSE POWER
HV	HIGH VOLTAGE
IDF	INTERMEDIATE DISTRIBUTION FRAME
IG	ISOLATED/INSULATED GROUND
ISC	SHORT CIRCUIT CURRENT AVAILABLE IN RMS SYMMETRICAL AMPERES
J-BOX	JUNCTION BOX
KCMIL	THOUSAND CIRCULAR MILS
KW	KILOWATT
KV	KILO VOLT
KVA	KILO VOLT-AMPERE
LDC	LOCAL DISTRIBUTION CABINET
LDF	LOCAL DISTRIBUTION FRAME
LCL	LONG CONTINUOUS LOAD
LFMC	LIQUID TIGHT FLEXIBLE METAL CONDUIT
LSIG	LONG, SHORT, INSTANTANEOUS, GROUND
LTG	LIGHTING
LV	LOW VOLTAGE
MFR	MANUFACTURER
MAX	MAXIMUM
MCC	MOTOR CONTROL CENTER
MIN	MINIMUM
MH	MANHOLE / METAL HALIDE
MLO	MAIN LUGS ONLY
M/M	METER AND MAIN SECTION
MV	MEDIUM VOLTAGE
NC	NORMALLY CLOSED
NEC	NATIONAL ELECTRICAL CODE
NEMA	NATIONAL ELECTRICAL MANUFACTURER'S ASSOCIATION
NEW (N)	NEW, TO BE FURNISHED AND INSTALLED BY CONTRACTOR
NF	NON-FUSED
NIC	NOT IN CONTRACT
N/L	NIGHT LIGHT
NO	NUMBER, NORMALLY OPEN
NTS	NOT TO SCALE
OC	ON CENTER
P	POLE
PB	PULL BOX
PF	POWER FACTOR
PH	PHASE
PNL	PANEL
POC	POINT OF CONNECTION
PP	POWER POLE
PWR	POWER
PVC	POLYVINYL CHLORIDE
QUAD	QUADRUPLEX
QTY	QUANTITY
RES	RESIDENTIAL
RGS	RIGID GALVANIZED STEEL
RMC	RIGID METALLIC CONDUIT
RM	ROOM
RNC	RIGID NONMETALLIC CONDUIT
SHT	SHEET
SN	SOLID NEUTRAL
SPEC	SPECIFICATIONS
SW	SWITCH
SWBD	SWITCHBOARD
TC	TIME CLOCK
TEL	TELEPHONE
TERM	TERMINAL
TP	TEMPORARY POLE
TYP	TYPICAL
UGPS	UNDERGROUND PULL SECTION
UL	UNDERWRITERS LABORATORY
UPS	UNINTERRUPTIBLE POWER SUPPLY
UON	UNLESS OTHERWISE NOTED
V	VOLT, VOLTAGE
VA	VOLT-AMPERE
VD	VOLTAGE DROP
VFC	VARIABLE FREQUENCY CONTROLLER
VFD	VARIABLE FREQUENCY DRIVE
W	WATT
WH	WATT-HOUR
WP	WEATHERPROOF
WW	WIREWAY
XP	EXPLOSION PROOF
Z	IMPEDANCE
4W	FOUR-WIRE
3W	THREE-WIRE
SS	JUNCTION BOX (4 11/16" SQUARED X2 1/8" DEEP)
Ø	DIAMETER, PHASE
#	NUMBER
°C	DEGREE CELSIUS
(E)	EXISTING DEVICE TO REMAIN
(R)	REMOVE EXISTING DEVICE AND ASSOCIATED CONDUIT AND WIRE
(RL)	REMOVE EXISTING DEVICE AND RELOCATE AS SHOWN ON PLAN
(NL)	NEW LOCATION OF RELOCATED DEVICE

SHEET LIST TABLE

SHEET NUMBER	SHEET TITLE
E0.1	ELECTRICAL LEGENDS & NOTES
E0.2	LUMINAIRE SCHEDULE
E0.3	SINGLE LINE DIAGRAM
E0.4	PANEL SCHEDULES
E1.0	ELECTRICAL SITE PLAN
E1.1	ELECTRICAL SITE PHOTOMETRY PLAN
E2.1A	POWER & SIGNAL PLAN SEG A
E2.1B	POWER & SIGNAL PLAN SEG B
E2.2	POWER & SIGNAL PLAN - ADMIN BUILDING
E3.1A	LIGHTING PLAN - FIRE STATION SEG A
E3.1B	LIGHTING PLAN - FIRE STATION SEG B
E3.2	LIGHTING PLAN - ADMIN BUILDING
E3.3	LIGHTING CONTROL RISER DIAGRAM
E3.4	LIGHTING CONTROLS - SITE
E3.5	LIGHTING CONTROLS - FIRE STATION SEGMENT A
E3.6	LIGHTING CONTROLS - FIRE STATION SEGMENT B
E3.7	LIGHTING CONTROLS - ADMINISTRATION BUILDING
E3.8	LIGHTING CONTROL DETAILS
E4.1	FIRE STATION PHOTOMETRY - NORMAL SEG A
E4.2	FIRE STATION PHOTOMETRY - NORMAL SEG B
E4.3	FIRE STATION PHOTOMETRY - EMERGENCY EGRESS SEG A
E4.4	FIRE STATION PHOTOMETRY - EMERGENCY EGRESS SEG B
E4.5	ADMIN PHOTOMETRY - NORMAL
E4.6	ADMIN PHOTOMETRY - EMERGENCY EGRESS
E5.1	TITLE 24 COMPLIANCE DOCUMENTS (PRESCRIPTIVE INDOOR)
E5.2	TITLE 24 COMPLIANCE DOCUMENTS (PRESCRIPTIVE OUTDOOR)
E5.3	TITLE 24 COMPLIANCE DOCUMENTS (PRESCRIPTIVE POWER DISTRIBUTION)
E5.4	TITLE 24 COMPLIANCE DOCUMENTS (PRESCRIPTIVE SOLAR AND BATTERY)
E6.1	ELECTRICAL DETAILS
E6.2	ELECTRICAL DETAILS (CONT.)
E6.3	ELECTRICAL DETAILS (CONT.)
E7.1	PV SINGLE LINE DIAGRAM
E7.2	PV SITE PLAN
E7.3	PV - ENLARGED PLAN
E7.4	PV SIGNAGE SHEET
E7.5	PV CUT SHEETS

LIGHTING LEGEND AND SYMBOLS

SYMBOL	DESCRIPTION
FN 2ab/2AB N/L	2'X4' RECESSED LUMINAIRE. FN INDICATES LUMINAIRE TYPE - REFER TO LUMINAIRE SCHEDULE, TYPICAL. SUBSCRIPT 2ab REFERS TO CIRCUIT AND SWITCH LEG 'a' AND 'b'. SUBSCRIPT 2AB REFERS TO CIRCUIT AND ZONE DESIGNATION 'A' AND 'B'. SUBSCRIPT N/L REFERS TO UNSWITCHED LEG. TYPICAL OF ALL LIGHTING.
FNE	2'X4' RECESSED LUMINAIRE WITH 90MIN. EMERGENCY BATTERY BACKUP
	SURFACE MOUNTED DOUBLE FACE EXIT SIGN (UNIVERSAL ARROWS INDICATED AS NEEDED)
	SURFACE MOUNTED SINGLE FACE EXIT SIGN (UNIVERSAL ARROWS INDICATED AS NEEDED)
Sxab	SWITCH, SINGLE POLE 20A, MOUNTED 48" A.F.F. TO TOP OF DEVICE. SUBSCRIPTS INDICATE THE FOLLOWING: M - MOTOR RATED 3 - THREE WAY 4 - FOUR WAY K - KEY OPERATED D - DIMMER SWITCH T - TIMED SWITCH a, b, c, ETC. - DESIGNATES SWITCH-LEGS CONTROLLED AND QUANTITY OF SWITCHES AT EACH LOCATION.
1AB	LOW-VOLTAGE OVERRIDE SWITCH. NUMBER INDICATES OVERRIDE SWITCH. A,B,C, ETC. DESIGNATES AREA AS SHOWN ON LIGHTING SCHEDULE.
$AB	LOW-VOLTAGE DIMMER SWITCH. MOUNTED 48" A.F.F. TO TOP OF DEVICE. 'A,B,C' ETC. - DESIGNATES ZONE CONTROLLED AND QUANTITY OF ZONES AT

LUMINAIRE SCHEDULE

TYPE	VOLTS	WATTS	LUMENS	LAMPS	COLOR	MOUNTING	FIXTURE DESCRIPTION	MFR.	CATALOG #	NOTES
S1	277V	57	7,753	LED	4000K	WALL	ARCHITECTURAL TRAPAZODAL STYLE WALL PACK IN BLACK FINISH.	LITHONIA	WDGE3-P1-40K-80CRI-R4-MVOLT-SRM-E20WC-DBLXD	CONNECTED TO PHOTOCELL AND TIMECLOCK FOR CONTROL.
S2A	277V	137	12,873	LED	4000K	POLE	POLETOP LED AREA FIXTURE WITH TYPE 4 DISTRIBUTION WITH BACKLIGHT CONTROL. PROVIDE REAR HOUSE SIDE SHIELD. FIXTURE MOUNTED AT +25-0" ABOVE GRADE. FIXTURE BUG RATING:B0-U0-G4	LITHONIA	DSX0 LED-P6-40K-80CRI-BLC4-277-RPA-HS-DBLXD	CONNECTED TO PHOTOCELL AND TIMECLOCK FOR CONTROL. PROVIDE WITH ROUND POLE: RSS-25-4B-DM19RAD-STLHHC-FBCSTL2PC-DBLXD.
S2B	277V	137	12,873	LED	4000K	POLE	POLETOP LED AREA FIXTURE WITH TYPE 5 WIDE DISTRIBUTION. FIXTURE MOUNTED AT +25-0" ABOVE GRADE.	LITHONIA	DSX0 LED-P6-40K-80CRI T5W-277-RPA-HS-DBLXD	CONNECTED TO PHOTOCELL AND TIMECLOCK FOR CONTROL. PROVIDE WITH ROUND POLE: RSS-25-4B-DM19RAD-STLHHC-FBCSTL2PC-DBLXD.
S3	277V	24	2,011	LED	4000K	SURFACE	ARCHITECTURAL SCONCE WITH WHITE ACRYLIC DIFFUSING LENS, TOP SHADE, SIDE LOUVERS AND EXTENDED ARM WALL MOUNT WITH 45 DEGREE SUPPORT. BLACK FINISH.	LUMINIS	EC615-L1L20-40K-277-SD20-LV3-WM45-FS-BKT	CONNECTED TO PHOTOCELL AND TIMECLOCK FOR CONTROL.
S4	277V	23	3,000	LED	3500K	IN-GROUND	IN-GROUND FIXTURE FOR FLAG POLE ILLUMINAITON WITH STAINLESS STEEL TRIM IN BLACK FINISH.	TARGETTI	KPL-41-GHP-SP-LO-40-1DU2325KA-1DU2394	CONNECTED TO PHOTOCELL AND TIMECLOCK FOR CONTROL.
S5	277V	19	1,610	LED	4000K	SURFACE	ARCHITECTURAL BOLLARD WITH DEEP CROWN AND IN BLACK FINISH.	LITHONIA	RADB LED-P4-SYM-277-BTT-BCC-DBLXD	CONNECTED TO PHOTOCELL AND TIMECLOCK FOR CONTROL.
S6A	277V	40	4,777	LED	3000K	WALL	6'-0" LED LINEAR SIGN LIGHT WITH REMOTE DRIVER AND IN BLACK FINISH.	ELLIPTIPAR	LUMINAIRE: S151-S-6-H-08-M-OD-O-930-00 MOUNT: (1)HGC-1 & (2)HGC-0 & (1) HGE	CONNECT TO PHOTOCELL FOR CONTROL.
S6B	277V	20	2,389	LED	3000K	WALL	3'-0" LED LINEAR SIGN LIGHT WITH REMOTE DRIVER AND IN BLACK FINISH.	ELLIPTIPAR	LUMINAIRE: S151-S-3-H-08-M-OD-O-930-00 MOUNT: (1)HGC-1 & (1) HGE	CONNECT TO PHOTOCELL FOR CONTROL.
S7	277V	20	2,700	LED	4000K	WALL	WALL MOUNT VARPORTIGHT LIGHT WITH ALUMINUM GUARDS AND RED GLOBE.	CURRENT LIGHTING	VWGL-2-VGL-RD	
S8	277V	34	4,163	LED	4000K	SURFACE	VAPOR TIGHT GASKETED LUMINAIRE WITH FROSTED POLYCARBONATE LENS AND ROUGH SERVICE HOUSING.	LITHONIA	CVST-L48-4000LM-MVOLT-40K-80CRI	

2

1. EQUALS SHALL BE CONSIDERED UPON SUBMITTAL REVIEW AND APPROVAL. PLEASE NOTE THAT IF AN ALTERNATE IS CONSIDERED:
   a. THE CONTRACTOR IS COMPLETELY AND SOLELY RESPONSIBLE FOR ALL ASPECTS OF THE SUBSTITUTION INCLUDING UPDATING CONSTRUCTION DOCUMENTS, OBTAINING APPROVALS AND PERMITS FROM LOCAL AUTHORITY, AND COORDINATING WITH ALL TRADES TO ENSURE CHANGES TO AFFECTED BUILDING SYSTEM ARE ACCOUNTED FOR AND ACCEPTABLE TO THE ENGINEERING TEAM. CONTRACTOR SHALL ENSURE SUBSTITUTED EQUIPMENT MEETS OR EXCEEDS DESIGN INTENT REGARDING RATINGS, PERFORMANCE, DIMENSIONAL CLEARANCES, PHYSICAL DIMENSIONS (MAX/MIN), WEIGHT LIMITATIONS, AND OTHER ASPECTS, PROVING SUBSTITUTION IS SUITABLE TO THE APPLICATION. ENGINEERS WILL REVIEW THE RATING AND PERFORMANCE OF SUBSTITUTED EQUIPMENT ONLY AND WILL NOT ASSUME RESPONSIBILITY FOR SUBSTITUTION AT ANY LEVEL.
   b. IF CONTRACTOR CANNOT MAKE SUBSTITUTED EQUIPMENT WORK IN THIS PROJECT, CONTRACTOR SHALL REVERT TO REQUIREMENTS OF PERMITTED CONSTRUCTION DOCUMENTS AT THEIR EXPENSE.
   c. IT IS UNDERSTOOD BY ALL PARTIES THAT ANY SUBSTITUTIONS OF SPECIFIED PRODUCTS ARE DONE FOR THE PURPOSE OF COST SAVINGS TO THE OWNER. THEREFORE, ANY MATERIAL SUBSTITUTION OR DEVIATIONS PROPOSED BY THE CONTRACTOR SHALL BE INCLUDED WITH THE INITIAL BID AND SHALL SHOW A LINE ITEMS CREDIT TO THE OWNER FOR EACH SUBSTITUTION IN LIEU OF SPECIFIED PRODUCTS.
   d. CONTRACTOR SHALL PROVIDE A POINT BY POINT PHOTOMETRIC STUDY FOR ALL AREAS WHERE ALTERNATE FIXTURES ARE SUBMITTED. LIGHT LEVELS WILL BE REVIEWED FOR COMPLIANCE WITH PROJECT REQUIREMENTS AND BASIS OF DESIGN VALUES.
2. THE FIXTURE SCHEDULE INDICATES GENERAL DESCRIPTION OF LIGHTING FIXTURES AND MANUFACTURERS CATALOG NUMBERS. IT SHALL BE THE CONTRACTORS RESPONSIBILITY TO DETERMINE THE CORRECT CEILING CONFIGURATION AND PROVIDE THE FIXTURES WITH ALL NECESSARY TRIMS AND MOUNTING HARDWARE SO THAT BOTH THE CEILING SYSTEM AND THE FIXTURE CONSTRUCTION MATCHES. PROVIDE SEISMIC HANGERS AS REQUIRED.
3. IT SHALL BE CONTRACTORS RESPONSIBILITY TO VERIFY THE EXACT LOCATION OF ALL LIGHTING FIXTURES AND TYPE OF CEILING WITH ARCHITECTURAL REFLECTED CEILING PLAN PRIOR TO ANY WORK. SEE ARCHITECTURAL REFLECTED CEILING PLAN PRIOR TO ANY WORK. SEE ARCHITECTURAL ELEVATION DRAWING FOR MOUNTING HEIGHTS OF WALL MOUNTED FIXTURES.
4. A JUNCTION BOX MUST BE PROVIDED WITH ALL EXIT LIGHTS CONNECTED TO MORE THAN ONE SET OF CONDUCTORS UNLESS THE EXIT LIGHT FIXTURE IS FURNISHED WITH AN APPROVED OUTLET BOX FOR THROUGH WIRING.
5. A COMPLETE TITLE 24 COMPLIANT LIGHTING CONTROL SYSTEM SHALL BE PROVIDED TO CONTROL ALL INTERIOR AND EXTERIOR LIGHTING SYSTEMS. REFER TO LIGHTING CONTROL DIAGRAMS, SCHEDULES AND DETAILS.
6. BATTERY PACK EMERGENCY TEST SWITCHES SHALL BE INTEGRAL TO LIGHT FIXTURE. COORDINATION OF SWITCH LOCATION IS REQUIRED WITH DESIGN TEAM IF INTEGRAL INSTALLATION IS NOT POSSIBLE.
7. FIXTURES DESIGNATED AS EMERGENCY SHALL BE SUPPLIED WITH INTEGRAL BATTERY PACK CAPABLE OF POWERING TWO T8 LAMPS FOR 90 MINUTES WITH A TOTAL LIGHT OUTPUT OF 1100 LUMENS OR ONE F13 BIAX FOR 90 MINUTES WITH A TOTAL LIGHT OUTPUT OF 520 LUMENS.
8. PROVIDE ALL REQUIRED MOUNTING HARDWARE ANCHORAGE AND SUPPORTS TO INSTALL LIGHTING FIXTURES.
9. PROVIDE SWIVEL BASE AND STEMS. LENGTHS AS REQUIRED TO MOUNT THE PENDANT MOUNTED FIXTURES. THE INSTALLATION SHALL COMPLY WITH TITLE 24 SEISMIC AND APPLICABLE UBC REQUIREMENTS.
10. THE CONTRACTOR SHALL PROVIDE A COMPLETE AND OPERABLE LIGHTING SYSTEM AS PART OF THIS BUILDING CONTRACT.
11. SUSPENSION SYSTEM FOR LIGHT FIXTURES WHICH HAVE PASSED SHAKING TABLE TESTS APPROVED BY THE OFFICE OF THE STATE OF ARCHITECT, OR WHICH, AS INSTALLED, ARE FREE TO SWING A MINIMUM OF 45° FROM THE VERTICAL IN ALL DIRECTIONS WITHOUT CONTACTING OBSTRUCTIONS. SHALL BE ASSUMED TO COMPLY WITH THE LATERAL FORCE REQUIREMENTS FOR SECTION 2305, PART 2, TITLE 24, CCR. UNLESS OF THE CABLE TYPE FREE SWING SUSPENSION SYSTEM SHALL HAVE A SAFETY WIRE OR CABLE ATTACHED TO THE FIXTURE AND STRUCTURE AT EACH SUPPORT CAPABLE OF SUPPORTING FOUR TIMES THE SUPPORTED LOAD.
12. FOR SUSPENDED AND SURFACE MOUNTED LIGHT FIXTURES, THE PRODUCT OF ICP NEED NOT EXCEED 12 FOR ANY VALUE OF 1.
13. IT SHALL BE THE CONTRACTOR'S RESPONSIBILITY TO VERIFY THAT THE FIXTURE BALLAST OR DRIVER VOLTAGE MATCHES THE CIRCUIT VOLTAGE SUPPLYING FIXTURE PRIOR TO ORDERING.
14. IT SHALL BE THE CONTRACTOR'S RESPONSIBILITY TO VERIFY BALLAST/DRIVER DIMMING CONFIGURATION IS COMPATIBLE WITH CONTROLS BEING PROVIDED PRIOR TO ORDERING FIXTURES. EX. 2 WIRE, 3 WIRE, 4 WIRE, 0-10V, CAT 5, ETC.
15. LED LIGHT FIXTURES SHALL BE IN ACCORDANCE WITH IES, NFPA, UL, AS SHOWN ON THE DRAWINGS, AND AS SPECIFIED.
16. LED LIGHT FIXTURES SHALL BE REDUCTION OF HAZARDOUS SUBSTANCES (ROHS)-COMPLIANT.
17. LED DRIVERS SHALL INCLUDE THE FOLLOWING FEATURES UNLESS OTHERWISE INDICATED:
    - MINIMUM EFFICIENCY: 85% AT FULL LOAD.
    - MINIMUM OPERATING AMBIENT TEMPERATURE: -20 DEG C. (-4 DEG F.)
    - INPUT VOLTAGE: 120 - 277V (±10%) AT 60 HZ., UNLESS OTHERWISE INDICATED.
    - INTEGRAL SHORT CIRCUIT, OPEN CIRCUIT, AND OVERLOAD PROTECTION.
    - POWER FACTOR: >=0.95.
    - TOTAL HARMONIC DISTORTION: <=20%.
    - COMPLY WITH FCC 47 CFR PART 15.
18. LED MODULES SHALL INCLUDE THE FOLLOWING FEATURES UNLESS OTHERWISE INDICATED:
    - COMPLY WITH IES LM-79 AND LM-80 REQUIREMENTS.
    - MINIMUM CRI 80 AND COLOR TEMPERATURE 4000K UNLESS OTHERWISE SPECIFIED IN LUMINAIRE SCHEDULE.
    - MINIMUM RATED LIFE: 50,000 HOURS PER IES L70.
    - LIGHT OUTPUT LUMENS AS INDICATED IN THE LUMINAIRE SCHEDULE.
19. LED DOWNLIGHTS:
    - HOUSING, LED DRIVER, AND LED MODULE SHALL BE PRODUCTS OF THE SAME MANUFACTURER.
20. LED TROFFERS:
    - LED DRIVERS, MODULES, AND REFLECTOR SHALL BE ACCESSIBLE, SERVICEABLE, AND REPLACEABLE FROM BELOW THE CEILING.
    - HOUSING, LED DRIVER, AND LED MODULE SHALL BE PRODUCTS OF THE SAME MANUFACTURER.
21. ALL FIXTURES MOUNTED OUTDOORS SHALL BE LISTED FOR WET LOCATION.
22. ALL REMOTE DRIVERS SHALL BE CONCEALED ABOVE CEILING OR PLACED IN A REMOTE LOCATION WHEN ATTIC SPACE IS NOT AVAILABLE.

LIGHTING CONTROLS SEQUENCE OF OPERATIONS

LIGHT CONTROLS SHALL PERFORM AS FOLLOWS:

ZONE	DELAY TO OFF (MIN)	ON/OFF METHOD	TECHNOLOGY	NOTES
SLEEP QUARTER	N/A	MANUAL SWITCH	N/A	
RESTROOMS, SLEEPING AREAS	5	AUTO ON/AUTO OFF	DUAL	TUNE FOR NOISE, DO NOT LOCATE NEAR AIR VENTS
RESTROOMS, ALL OTHER AREAS	5	AUTO ON/AUTO OFF	DUAL	TUNE FOR NOISE, DO NOT LOCATE NEAR AIR VENTS
PRIVATE OFFICE	10	AUTO ON TO 50%/MANUAL ON TO 100%/AUTO OFF	DUAL	TUNE FOR NOISE, DO NOT LOCATE NEAR AIR VENTS
OPEN OFFICE	15	AUTO ON/AUTO OFF	DUAL	TUNE FOR NOISE, DO NOT LOCATE NEAR AIR VENTS
CONFERENCE ROOM	15	AUTO ON/AUTO OFF	DUAL	TUNE FOR NOISE, DO NOT LOCATE NEAR AIR VENTS
BREAK ROOM	15	AUTO ON/AUTO OFF	DUAL	TUNE FOR NOISE, DO NOT LOCATE NEAR AIR VENTS
HALLWAYS #1 & 3	15	TIME CLOCK ON/OFF, DIM TO 50% AFTER DELAY	DUAL	TUNE FOR NOISE, DO NOT LOCATE NEAR AIR VENTS
HALLWAY #2	15	MANUAL SWITCH & NIGHT LIGHTING	N/A	
LOBBY	15	AUTO ON/AUTO OFF	DUAL	TUNE FOR NOISE, DO NOT LOCATE NEAR AIR VENTS
CLASSROOM	15	AUTO ON/AUTO OFF	DUAL	TUNE FOR NOISE, DO NOT LOCATE NEAR AIR VENTS
EXTERIOR LIGHTING	10	PHOTOCELL ON/TIME CLOCK OFF, DIM TO 50% AFTER DELAY	INFRARED	N/A

NOTE: FOR ZONES WITH PLUG CONTROLLERS, DELAY TO OFF SHALL BE THE SAME AS THE LIGHTING IN THAT ZONE.

SEQUENCE OF OPERATIONS 1

LUMINAIRE SCHEDULE

TYPE	VOLTS	WATTS	LUMENS	LAMPS	COLOR	MOUNTING	FIXTURE DESCRIPTION	MFR.	CATALOG #	NOTES
F1	277V	35	4,397	LED	3500K	CEILING	SURFACE MOUNT LINEAR LED STRIP LIGHT WITH CURVED, SMOOTH LENS AND WHITE FINISH .	LITHONIA	BLWP4-40L-ADSMEZ1-LP835	
F1E	277V	35	4,397	LED	3500K	CEILING	SURFACE MOUNT LINEAR LED STRIP LIGHT WITH CURVED, SMOOTH LENS, WHITE FINISH AND 90-MINUTE BATTERY BACK-UP.	LITHONIA	BLWP4-40L-ADSMEZ1-LP835-E10WLCP	
F2A	120V	11	831	LED	3500K	SURFACE	UNDERCABINET LIGHTING WITH SWIVEL.	JUNO	UPLD-22-SWW4-90CRI-WH	
F2B	120V	15	1,106	LED	3500K	SURFACE	UNDERCABINET LIGHTING WITH SWIVEL.	JUNO	UPLD-30-SWW4-90CRI-WH	
F3A	277V	13	1,541	LED	3500K	RECESSED	RECESSED LED DOWNLIGHT WITH 0-10V DIMMING BALLAST.	GOTHAM	IV06-D-15LM-35K-90CRI-MWD-MIN10-MVOLT-ZT-NCH-P-AR-LSS-F	PROVIDE WITH LINE VOLTAGE AND STANDARD SWITCHING.
F3AE	277V	13	1,541	LED	3500K	RECESSED	RECESSED LED DOWNLIGHT WITH 0-10V DIMMING AMD 90 MINUTE EMERGENCY BATTERY BACKUP.	GOTHAM	IV06-D-15LM-35K-90CRI-MWD-MIN10-MVOLT-ZT-E10W-NCH-P-AR-LSS-F	PROVIDE WITH LINE VOLTAGE AND STANDARD SWITCHING.
F3B	277V	7	830	LED	3500K	RECESSED	RECESSED LED DOWNLIGHT WITH 0-10V DIMMING BALLAST.	GOTHAM	IV06-D-07LM-35K-90CRI-MWD-MIN10-MVOLT-ZT-NCH-P-AR-LSS-F	
F3BE	277V	7	830	LED	3500K	RECESSED	RECESSED LED DOWNLIGHT WITH 0-10V DIMMING AMD 90 MINUTE EMERGENCY BATTERY BACKUP.	GOTHAM	IV06-D-07LM-35K-90CRI-MWD-MIN10-MVOLT-ZT-E10W-NCH-P-AR-LSS-F	
F4A	277V	13	1,313	LED	3500K	RECESSED	RECESSED LED DOWNLIGHT WITH 0-10V DIMMING BALLAST AND RATED FOR WET LOCATION.	GOTHAM	IV06-D-15LM-35K-90CRI-MWD-MIN10-MVOLT-ZT-NCH-WL-P-AR-LSS-F	
F4AE	277V	13	1,313	LED	3500K	RECESSED	RECESSED LED DOWNLIGHT WITH 0-10V DIMMING BALLAST, RATED FOR WET LOCATION AND 90-MINUTE EMERGENCY BATTERY BACK-UP.	GOTHAM	IV06-D-15LM-35K-90CRI-MWD-MIN10-MVOLT-ZT-E10W-NCH-WL-P-AR-LSS-F	
F4B	277V	18	2,068	LED	3500K	RECESSED	RECESSED LED DOWNLIGHT WITH 0-10V DIMMING BALLAST AND RATED FOR WET LOCATION.	GOTHAM	IV06-D-20LM-35K-90CRI-WD-MIN10-MVOLT-ZT-NCH-WL-P-AR-LSS-F	
F4BE	277V	18	2,068	LED	3500K	RECESSED	RECESSED LED DOWNLIGHT WITH 0-10V DIMMING BALLAST, RATED FOR WET LOCATION AND 90-MINUTE EMERGENCY BATTERY BACK-UP.	GOTHAM	IV06-D-20LM-35K-90CRI-WD-MIN10-MVOLT-ZT-E10W-NCH-WL-P-AR-LSS-F	
F5	277V	103	12,425	LED	4000K	CEILING	VAPOR TIGHT GASKETED LUMINAIRE WITH FROSTED POLYCARBONATE LENS AND ROUGH SERVICE HOUSING.	LITHONIA	CVST-L96-12000LM-MVOLT-40K-80CRI	
F6A	277V	33	4,426	LED	4000K	CEILING	VAPOR TIGHT GASKETED LUMINAIRE WITH FROSTED POLYCARBONATE LENS AND ROUGH SERVICE HOUSING.	LITHONIA	VAP-4000LM-FST-WD-MVOLT-GZ1-40K-90CRI	PROVIDE WITH SURFACE MOUNTING BRACKET 'VAPSMB'.
F6B	277V	33	4,426	LED	4000K	CEILING	VAPOR TIGHT GASKETED LUMINAIRE WITH FROSTED POLYCARBONATE LENS AND ROUGH SERVICE HOUSING.	LITHONIA	VAP-4000LM-FST-WD-MVOLT-GZ1-40K-90CRI-CMB	PROVIDE WITH STAINLESS STEEL CHAIN SET 'HC36 STS'.
F7	277V	25	1,692	LED	3500K	RECESSED	6" DOWNLIGHT RATED FOR SHOWER USE, WHITE TRIM WITH ANIT-MICROBIAL FINISH AND FLUSH, TEXTURED LENS.	GOTHAM	EV06SH-35/20-DFFAMF-SOL-MVOLT-EZ1-90CRI	
F8	120V	7	403	LED	3000K	WALL	5" WALL MOUNT READING SPOTLIGHT, WHITE FINISH AND ADJUSTABLE, SWIVEL 300 DEGRESS AND ON A 90 DEGREE ARC.	ZANEEN	D92102R9-MWL	PROVIDE WITH LINE VOLTAGE AND STANDARD SWITCHING.
F9	277V	30	3,599	LED	3500K	RECESSED	2'X4' RECESSED LED FIXTURE WITH 0-10V DIMMING DRIVER.	LITHONIA	STAKP-2X4-4000LM-90CRI-35K-COLT-MIN10	
F9E	277V	30	3,599	LED	3500K	RECESSED	2'X4 RECESSED LED FIXTURE WITH 0-10V DIMMING AND 90 MINUTE EMERGENCY BATTERY BACKUP.	LITHONIA	STAKP-2X4-4000LM-90CRI-35K-COLT-MIN11	
F10	277V	11	800	LED	3000K	PENDANT	FORMA CARET 12" CONE PENDANT WITH BLACK EXTERIOR FINISH AND WHITE INTERIOR FINISH AND BLACK POWER CORD.	LUMENWERX	FCARP-12IN-D-HLO-SW-90CRI-800LM-30K-277-D1-PCS-TMB-TMW	
F11A	277V	23	3,093	LED	3500K	RECESSED	2'X2' RECESSED LED FIXTURE WITH 0-10V DIMMING	LITHONIA	STAKP-2X2-3000LM-90CRI-35K-COLT-MIN10-ZT-MVOLT	
F11AE	277V	23	3,093	LED	3500K	RECESSED	2'X2' RECESSED LED FIXTURE WITH 0-10V DIMMING AND 90-MINUTE BATTERT PACK AT 2,055 LUMENS.	LITHONIA	STAKP-2X2-3000LM-90CRI-35K-COLT-MIN10-ZT-MVOLT-E15WLCP	
F11B	277V	23	3,093	LED	3500K	RECESSED	2'X2' RECESSED LED FIXTURE WITH 0-10V DIMMING	LITHONIA	STAKP-2X2-2000LM-90CRI-35K-COLT-MIN10-ZT-MVOLT	
F11BE	277V	23	3,093	LED	3500K	RECESSED	2'X2' RECESSED LED FIXTURE WITH 0-10V DIMMING AND 90-MINUTE BATTERT PACK AT 2,055 LUMENS.	LITHONIA	STAKP-2X2-2000LM-90CRI-35K-COLT-MIN10-ZT-MVOLT-E15WLCP	
F12	120V	7	616	LED	3000K	RECESSED	RESIDENTIAL FIRE RATED DOWNLIGHT WITH 4" HOUSING, QUICK-CONNECT RETROBASICS INSERT AND SMOOTH BAFFLE.	JUNO	HOUSING: IC1FWLEDT24 INSERT: RB4S-SWW5-MW-M6	PROVIDE WITH LINE VOLTAGE AND STANDARD SWITCHING.
X1	277V	5	N/A	LED		SURFACE	LED EDGE LIT EXIT SIGN, RED LETTERS, MOUNTING TBD, BRUSHED ALUM FINISH WITH BATTERY BACKUP.	LITHONIA	LQC-1-R-EL N	

STK ARCHITECTURE, INC.
42095 ZEVO DR., TEMECULA, CALIFORNIA 92590-3780
Phone: 951.296.9110 Fax: 951.296.6079 Email: stk@stkinc.com

CONSULTANT:
REVIEWED FOR CODE COMPLIANCE
DESIGN WEST ENGINEERING
MECHANICAL • ELECTRICAL • ENERGY CONSULTANTS
BUILDING BUREAU SOLUTIONS INC.

REGISTERED PROFESSIONAL ENGINEER
BRADEN KEMP
22839
SIGNED:05/05/2026
ELECTRICAL
STATE OF CALIFORNIA

PROJECT ADMINISTERED BY:
CITY OF PERRIS

101 NORTH "D" STREET
PERRIS, CA 92570

PROJECT NAME:
SOUTH FIRE STATION AND ADMINISTRATIVE BUILDING

PROJECT CIP: F077

2495 MURRIETA ROAD
PERRIS, CA 92585

ISSUE INFORMATION:

DATE:	INFORMATION:
11-26-25	95% CD SUBMITTAL
02-05-26	1 1st PC RESPONSE
02-19-26	2 2nd PC RESPONSE
04-27-26	4 4th PC RESPONSE

SHEET INFORMATION:
STK PROJECT NO.: 365-03-25
SCALE: AS NOTED
DATE: NOVEMBER 2025
PLOT DATE: –
DRAWN BY: JM / JM

SEAL:

SHEET TITLE:
LUMINAIRE SCHEDULE

SHEET NO.:
E0.2

05/05/2026 10:29AM R:_PROJECT\2025\25-114 perris fire station_CAD\25-114 E-LumSchd.dwg

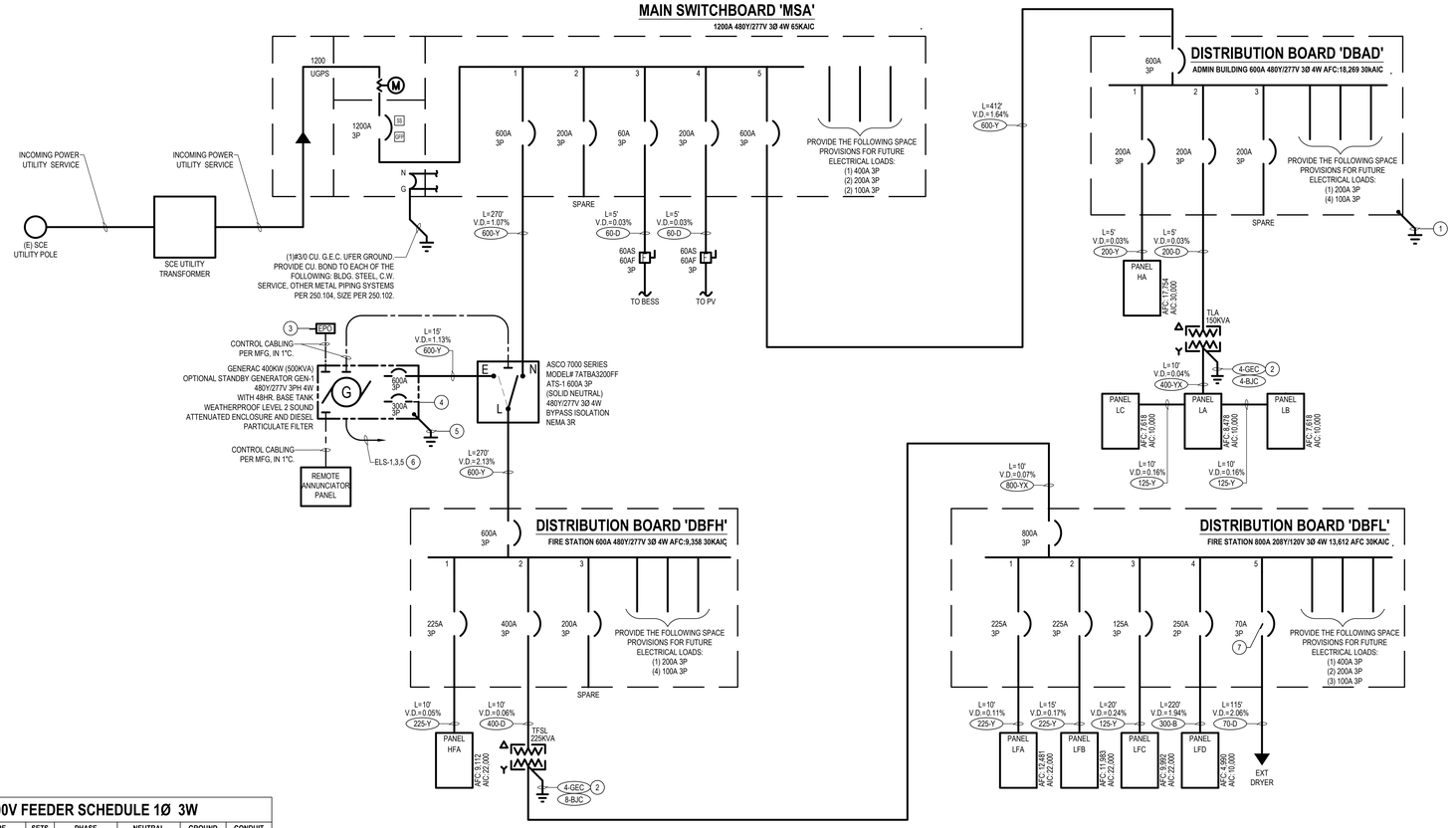

CONSTRUCTION NOTES

1. (1)#6 C.U. G.E.C. TO GROUNDS RODS AND/OR CONCRETE ENCASED ELECTRODE AND (1)#6 BOND TO METALLIC COLD WATER SUPPLY PIPE AT UNIT ENTRY PER NEC 250-52(A) AND 250-104(A). DO NOT BOND NEUTRAL AND GROUND TERMINALS INSIDE SWITCHBOARD OR PANELBOARD (NO GROUND LOOP).
2. GEC TO BUILDING OR STRUCTURE GROUND ELECTRODE SYSTEM PER NEC 250.30(A)(4). OR BOND TO BLDG. STEEL OR METAL WATER PIPE IN VICINITY PER NEC 250.68(C).
3. PROVIDE EMERGENCY OFF PUSHBUTTON 'EPO' NEAR GENERATOR. REFER TO SITE PLAN FOR LOCATION.
4. PROVIDE SPARE CIRCUIT BREAKER FOR LOAD BANK MAINTENANCE.
5. 1#2 CU. BOND TO DRIVEN GROUND ROD, SIZED PER EQUIPMENT GROUNDING CONDUCTORS CEC TABLE 250.122.
6. PROVIDE (1) 1"C. UNDERGROUND WITH CIRCUITS FROM PANEL AS SHOWN FOR WATER HEATER JACKET, CONTROL PANEL AND BATTERY CHARGER.
7. PROVIDE CIRCUIT BREAKER WITH LOCK-OFF CAPABILITY.
8. PROVIDE WITH TITLE 24 POWER USE MONITORING PROVISIONS FOR ELECTRICAL CIRCUIT DESEGREGATION, EATON PRL PANELBOARD.

GENERAL NOTES

1. REFER TO 'GENERAL NOTES' ON ELECTRICAL LEGENDS AND NOTES SHEET FOR WIRING METHODS, MATERIALS, AND REQUIREMENTS.
2. ALL NEW CIRCUIT BREAKERS, PANELBOARDS AND TRANSFORMERS SHALL BE OF THE SAME MANUFACTURER.
3. ALL NEW SWITCHBOARDS DISTRIBUTION SECTIONS SHALL BE EQUIPPED WITH FULL HEIGHT VERTICAL BUSSING TO ACCOMMODATE MAXIMUM UTILIZATION OF SPACE FOR DEVICES.
4. ALL GROUND CONNECTIONS SHALL BE CADWELD.
5. AVAILABLE FAULT AT SERVICE POINT SHALL BE CONSIDERED AT 65,000 RMS SYM.
6. ALL PANELBOARDS SHALL BE FULLY RATED FOR THE AVAILABLE FAULT UNLESS OTHERWISE NOTED.
7. THE FEEDER LENGTHS SHOWN ON THESE DRAWINGS ARE FOR CALCULATION PURPOSES ONLY AND ARE NOT VALID FOR BIDDING.
8. ALL CIRCUIT BREAKERS AND FUSES WITH RATINGS OF 1200A AND ABOVE SHALL INCLUDE AN APPROVED ARC ENERGY REDUCTION METHOD TO REDUCE CLEARING TIME PER CEC 240.67 & 240.87.
9. GROUND-FAULT PROTECTION OF EQUIPMENT SHALL BE PROVIDED FOR SOLIDLY GROUNDED WYE SERVICES OF 480 VOLTS FOR EACH SERVICE AND FEEDER DISCONNECTS RATED 1000 AMPERES OR MORE PER CEC 230.95.
10. ALL SWITCHBOARDS, SWITCHGEAR AND PANELBOARDS AT OTHER THAN DWELLING UNITS SHALL BE LEGIBLY MARKED IN THE FIELD WITH THE MAXIMUM AVAILABLE FAULT CURRENT PER CEC 110.24. THE FIELD MARKING(S) SHALL INCLUDE THE DATE THE FAULT-CURRENT CALCULATION WAS PERFORMED AND BE OF SUFFICIENT DURABILITY TO WITHSTAND THE ENVIRONMENT INVOLVED. THE CALCULATION SHALL BE DOCUMENTED AND MADE AVAILABLE TO THOSE AUTHORIZED TO DESIGN, INSTALL, INSPECT, MAINTAIN, OR OPERATE THE SYSTEM. WHEN MODIFICATIONS TO THE ELECTRICAL INSTALLATION OCCUR THAT AFFECT THE MAXIMUM AVAILABLE FAULT CURRENT AT THE SERVICE, THE MAXIMUM AVAILABLE FAULT CURRENT SHALL BE VERIFIED OR RECALCULATED AS NECESSARY TO ENSURE THE SERVICE EQUIPMENT RATINGS ARE SUFFICIENT FOR THE MAXIMUM AVAILABLE FAULT CURRENT AT THE LINE TERMINALS OF THE EQUIPMENT. THE REQUIRED FIELD MARKING(S) IN 110.24(A) SHALL BE ADJUSTED TO REFLECT THE NEW LEVEL OF MAXIMUM AVAILABLE FAULT CURRENT.
11. EQUIPMENT DATA AND CONFIGURATIONS SHOWN ON THE SINGLE LINE DIAGRAM PROVIDE GENERAL EQUIPMENT INFORMATION. CONTRACTOR SHALL REVIEW ELECTRICAL PLANS AND SPECIFICATIONS TO VERIFY ALL EQUIPMENT ASSOCIATED DESIGN INFORMATION. THE CONTRACTOR IS RESPONSIBLE FOR PROVIDING ALL NECESSARY COMPONENTS REQUIRED FOR A COMPLETE AND OPERATIONAL INSTALLATION. ANY DISCREPANCIES BETWEEN DESCRIPTIONS, SPECIFICATIONS, AND EXISTING CONDITIONS ARE TO BE PRESENTED TO THE ENGINEER OF RECORD PRIOR TO COMPLETION OF THE BID PROCESS FOR CLARIFICATION. NO EQUIPMENT SHALL BE ORDERED UNTIL DISCREPANCIES ARE RESOLVED THROUGH A FORMAL RFI PROCESS.
12. CONTRACTOR SHALL PROVIDE SWITCHBOARD SHOP DRAWINGS TO SERVING UTILITY COMPANY PRIOR TO FABRICATION OF EQUIPMENT. CONTRACTOR SHALL SECURE CONFIRMATION THAT THE PROPOSED SWITCHBOARD COMPLIES WITH ALL ELECTRICAL UTILITY COMPANY REGULATIONS.
13. ELECTRICAL EQUIPMENT SUBMITTALS SHALL BE ACCOMPANIED BY A '/"=1'-0" SCALE DRAWING WHICH REFERENCES ALL ELECTRICAL EQUIPMENT ROOMS AND EQUIPMENT. DRAWING SHALL CLEARLY IDENTIFY ADEQUATE SPACE IS PROVIDED IN ELECTRICAL ROOMS TO ACCOMMODATE THE INSTALLATION OF ELECTRICAL EQUIPMENT WHILE MAINTAINING ALL REQUIRED CODE CLEARANCES. ALL SUBMITTALS NOT ACCOMPANIED BY SCALED DRAWING WILL BE REJECTED AS INCOMPLETE.
14. CONTRACTOR SHALL CONDUCT, WITH ASSISTANCE OF SWITCHGEAR MANUFACTURER OR LICENSED ENGINEER, AN ELECTRICAL HAZARD ANALYSIS CONSISTING OF AN ARC FLASH, SHORT CIRCUIT, AND COORDINATION STUDY TO DETERMINE APPROPRIATE LEVELS OF PERSONNEL PROTECTIVE EQUIPMENT (PPE) AS REQUIRED BY NFPA 70E AND IEEE STD 1584, AND TO ENSURE PROPER COORDINATION (INCLUDING GROUND FAULT COORDINATION) EXISTS BETWEEN ALL OVER-CURRENT PROTECTIVE DEVICES SHOWN ON SINGLE-LINE DIAGRAM ADDITIONALLY:
    - 14.1. STUDY SHALL INCLUDE ALL PORTIONS OF ELECTRICAL SINGLE-LINE DIAGRAM. NORMAL SYSTEM CONNECTIONS AND THOSE THAT RESULT IN MAXIMUM FAULT CONDITION SHALL BE ADEQUATELY COVERED IN THE STUDY. PERFORM STUDY WITH THE AID OF A COMPUTER PROGRAM, SKM CAPTOR, OR EQUAL. STUDY SHALL IDENTIFY SELECTIVE COORDINATION SUCH THAT DEVICE CLOSEST TO FAULT WILL TRIP FIRST. GROUND FAULT PORTION OF THE STUDY SHALL DEMONSTRATE COORDINATION OF MAIN BREAKER AND ANY FEEDER GROUND FAULT DEVICES WITH DOWNSTREAM CIRCUIT BREAKERS 30A AND LESS.
    - 14.2. CONTRACTOR SHALL BE RESPONSIBLE TO RECOMMEND SETTINGS OF ALL DEVICES AND TO INCLUDE GROUND FAULT SETTINGS NECESSARY TO ACHIEVE SYSTEM COORDINATION. CONTRACTOR SHALL FIELD ADJUST DEVICES ACCORDINGLY UTILIZING A QUALIFIED MANUFACTURER'S REPRESENTATIVE.
    - 14.3. DURING THE CONSTRUCTION PHASE OF THE PROJECT ALL GROUND FAULT RELAYS SHALL BE SET AT SHORTEST AVAILABLE TIME DELAY.
    - 14.4. RESULTS OF COORDINATION STUDY SHALL BE SUBMITTED AS PART OF OVERALL SWITCHGEAR SUBMITTAL AND SHALL INCLUDE PROTECTIVE DEVICE TIME VERSUS CURRENT COORDINATION CURVES, GROUPING APPROPRIATE DEVICES TOGETHER, TABULATIONS OF RELAY AND CIRCUIT BREAKER TRIP SETTINGS, FUSE SELECTION, AND COMMENTARY REGARDING SAME.
    - 14.5. A GROUND FAULT SYSTEM TEST SHALL BE CONDUCTED BY AN INDEPENDENT TESTING AGENCY PER NEC (CEC-WHERE ADOPTED) 230.95(C). GROUND FAULT SYSTEM TEST SHALL BE PERFORMED IN PRESENCE OF LOCAL AHJ. VERIFICATION OF DEVICE SETTINGS PER THE COORDINATION STUDY SHALL BE PERFORMED BY SAME INDEPENDENT TESTING AGENCY. GROUND FAULT TEST RESULTS SHALL BE DELIVERED TO ENGINEER OR RECORD.
    - 14.6. PERFORM ARC FLASH ANALYSIS TO DETERMINE FLASH BOUNDARY, FLASH HAZARD CATEGORY, PPE REQUIREMENTS, AND MINIMUM ARC RATING(CAL/SQUARE CM). ABOVE INFORMATION SHALL BE INDICATED AT EACH ARC FLASH SOURCE ON A NEC (CEC WHERE ADOPTED) COMPLIANT ARC FLASH HAZARD LABEL(S) AS MANUFACTURED BY BRADY.
15. GROUND ALL ELECTRICAL EQUIPMENT, BRANCH CIRCUITS, FEEDERS, PANEL AND DISTRIBUTION BOARDS, ELECTRICAL SERVICES, ETC. PER ADOPTED NEC ARTICLES 250.
16. ALL PANELBOARDS INSTALLED IN GARAGES OR AREAS COMPLYING WITH ARTICLE 500, 511, AND/OR 514 SHALL BE INSTALLED 18" ABOVE FLOOR LINE TO BOTTOM OF PANEL AND SHALL BE IN MULTIPLE PANELS AS REQUIRED WITH TOP MOST BREAKER NO HIGHER THAN 6'-7" A.F.F. PER ARTICLE 380.
17. ALL ELECTRICAL EQUIPMENT (I.E. SWITCHGEAR, TRANSFORMERS, DISTRIBUTION BOARDS, PANELBOARDS, DISCONNECT SWITCHES, ETC.) SHALL BE PROVIDED WITH A PHENOLIC NAMEPLATE WITH ENGRAVED LETTERS PER SPECIFICATIONS. ALL NAMEPLATES SHALL BE FASTENED WITH A MINIMUM OF TWO (2) MACHINE SCREWS. NO SELF ADHESIVE NAMEPLATES ARE ALLOWED.
18. ANY FLOOR-STANDING ELECTRICAL EQUIPMENT (I.E. INVERTERS, DISTRIBUTION BOARDS, SWITCHBOARDS, ATS SWITCHES, MOTOR CONTROL CENTERS, ETC.) WHICH ARE MOUNTED AT/BELOW GRADE AND/OR SUSCEPTIBLE TO WATER DAMAGE SHALL BE MOUNTED ON A MINIMUM 4" HIGH HOUSEKEEPING PAD WHICH EXTENDS 4" BEYOND EQUIPMENT IN ALL DIRECTIONS.
19. ELECTRICAL CONTRACTOR TO INCLUDE IN BID ALL ASSOCIATED COSTS FOR THIRD PARTY TESTING OF ELECTRICAL EQUIPMENT, GROUND FAULT, CONDUCTORS, ETC.
20. ALL CONDUCTOR TERMINATIONS SHALL BE TIGHTENED TO MANUFACTURER RECOMMENDATIONS USING AN APPROVED MEANS.
21. ALL ELECTRICAL EQUIPMENT SHALL BE IDENTIFIED WITH NAMEPLATES, REFER. TO SPECIFICATIONS. IN ADDITION, EACH DISCONNECT MUST BE MARKED TO IDENTIFY ITS PURPOSE AND INCLUDE IDENTIFICATION OF CIRCUIT SOURCE THAT SUPPLIES DISCONNECTING MEANS. (110.22)
22. FOR ANY SERVICE WITH MORE THAN ONE SERVICE DISCONNECT, BUT NO MORE THAN SIX DISCONNECTS, EACH SERVICE DISCONNECT SHALL BE LOCATED IN A SEPARATE ENCLOSURE, PANELBOARD OR SWITCHBOARD SECTION (230.71(B)).
23. TRANSFORMERS SHALL HAVE A DISCONNECTING MEANS LOCATED EITHER IN SIGHT OF THE TRANSFORMER OR IN A REMOTE LOCATION PER 450.14. WHERE LOCATED IN A REMOTE LOCATION, THE DISCONNECTING MEANS SHALL BE LOCKABLE OPEN IN ACCORDANCE WITH 110.25, AND ITS LOCATION SHALL BE FIELD MARKED ON THE TRANSFORMER.
24. WHERE EQUIPMENT RATED 800 AMPS OR MORE, DOOR IN ELECTRICAL ROOM SHALL OPEN IN THE DIRECTION OF EGRESS AND SHALL BE EQUIPPED WITH LISTED PANIC HARDWARE PER CEC 110.26(C)(3).

600V FEEDER SCHEDULE 1Ø 3W

LABEL	TYPE	SETS	PHASE	NEUTRAL	GROUND	CONDUIT
20-B	20A-3W	1	2 # 12	1 # 12	1 # 12	3/4"
30-B	30A-3W	1	2 # 10	1 # 10	1 # 10	3/4"
40-B	40A-3W	1	2 # 8	1 # 10	1 # 10	1"
50-B	50A-3W	1	2 # 6	1 # 6	1 # 10	1"
60-B	60A-3W	1	2 # 6	1 # 6	1 # 10	1"
70-B	70A-3W	1	2 # 4	1 # 4	1 # 8	1-1/4"
80-B	80A-3W	1	2 # 3	1 # 3	1 # 8	1-1/4"
90-B	90A-3W	1	2 # 2	1 # 2	1 # 8	1-1/4"
100-B	100A-3W	1	2 # 1	1 # 1	1 # 8	1-1/2"
125-B	125A-3W	1	2 # 1	1 # 1	1 # 6	1-1/2"
150-B	150A-3W	1	2 # 1/0	1 # 1/0	1 # 6	2"
175-B	175A-3W	1	2 # 2/0	1 # 2/0	1 # 6	2"
200-B	200A-3W	1	2 # 3/0	1 # 3/0	1 # 6	2"
225-B	225A-3W	1	2 # 4/0	1 # 4/0	1 # 4	2 1/2"
250-B	250A-3W	1	2 # 250 KCM	1 # 250 KCM	1 # 4	2 1/2"
300-B	300A-3W	1	2 # 350 KCM	1 # 350 KCM	1 # 4	3"

NOTE:
ALL CONDUCTOR SIZES ARE BASED ON TYPE THHN COPPER CONDUCTOR UNLESS OTHERWISE NOTED. THE AMPACITY OF CONDUCTORS SHALL BE BASED ON THE TERMINALS NOT TO EXCEED 60°C FOR CONDUCTOR SIZE #14 THROUGH #1 AWG OR 75°C FOR CONDUCTOR SIZE OVER #1 AWG AS PER NEC 110.14(C).

600V FEEDER SCHEDULE 3Ø 4W

LABEL	TYPE	SETS	PHASE	NEUTRAL	GROUND	CONDUIT
20-Y	20A-4W	1	3 # 12	1 # 12	1 # 12	3/4"
30-Y	30A-4W	1	3 # 10	1 # 10	1 # 10	3/4"
40-Y	40A-4W	1	3 # 8	1 # 10	1 # 10	1"
50-Y	50A-4W	1	3 # 6	1 # 6	1 # 10	1"
60-Y	60A-4W	1	3 # 6	1 # 6	1 # 10	1"
70-Y	70A-4W	1	3 # 4	1 # 4	1 # 8	1"
80-Y	80A-4W	1	3 # 3	1 # 3	1 # 8	1-1/4"
90-Y	90A-4W	1	3 # 2	1 # 2	1 # 8	1-1/4"
100-Y	100A-4W	1	3 # 1	1 # 1	1 # 8	1-1/2"
125-Y	125A-4W	1	3 # 1	1 # 1	1 # 6	1-1/2"
150-Y	150A-4W	1	3 # 1/0	1 # 1/0	1 # 6	2"
175-Y	175A-4W	1	3 # 2/0	1 # 2/0	1 # 6	2"
200-Y	200A-4W	1	3 # 3/0	1 # 3/0	1 # 6	2"
225-Y	225A-4W	1	3 # 4/0	1 # 4/0	1 # 4	2 1/2"
250-Y	250A-4W	1	3 # 250 KCM	1 # 250 KCM	1 # 4	2 1/2"
300-Y	300A-4W	1	3 # 350 KCM	1 # 350 KCM	1 # 4	3"
350-Y	350A-4W	1	3 # 500 KCM	1 # 500 KCM	1 # 2	4"
400-Y	400A-4W	2	3 # 3/0	1 # 3/0	1 # 2	3"
450-Y	450A-4W	2	3 # 4/0	1 # 4/0	1 # 2	3"
500-Y	500A-4W	2	3 # 250 KCM	1 # 250 KCM	1 # 2	3"
600-Y	600A-4W	2	3 # 350 KCM	1 # 350 KCM	1 # 1/0	4"
700-Y	700A-4W	2	3 # 500 KCM	1 # 500 KCM	1 # 1/0	4"
800-Y	800A-4W	3	3 # 300 KCM	1 # 300 KCM	1 # 1/0	3"
1000-Y	1000A-4W	3	3 # 500 KCM	1 # 500 KCM	1 # 2/0	4"
1200-Y	1200A-4W	3	3 # 600 KCM	1 # 600 KCM	1 # 3/0	4"
1600-Y	1600A-4W	4	3 # 600 KCM	1 # 600 KCM	1 # 4/0	4"
2000-Y	2000A-4W	5	3 # 600 KCM	1 # 600 KCM	1#250KCM	4"
2500-Y	2500A-4W	6	3 # 600 KCM	1 # 600 KCM	1#350KCM	4"
3000-Y	3000A-4W	8	3 # 600 KCM	1 # 600 KCM	1#500KCM	4"
4000-Y	4000A-4W	10	3 # 600 KCM	1 # 600 KCM	1#500KCM	4"

NOTE:
ALL CONDUCTOR SIZES ARE BASED ON TYPE THHN COPPER CONDUCTOR UNLESS OTHERWISE NOTED. THE AMPACITY OF CONDUCTORS SHALL BE BASED ON THE TERMINALS NOT TO EXCEED 60°C FOR CONDUCTOR SIZE #14 THROUGH #1 AWG OR 75°C FOR CONDUCTOR SIZE OVER #1 AWG AS PER NEC 110.14(C).

600V FEEDER SCHEDULE 3Ø 3W

LABEL	TYPE	SETS	PHASE	NEUTRAL	GROUND	CONDUIT
20-D	20A-3W	1	3 # 12	NA	1 # 12	3/4"
30-D	30A-3W	1	3 # 10	NA	1 # 10	3/4"
40-D	40A-3W	1	3 # 8	NA	1 # 10	1"
50-D	50A-3W	1	3 # 6	NA	1 # 10	1"
60-D	60A-3W	1	3 # 6	NA	1 # 10	1"
70-D	70A-3W	1	3 # 4	NA	1 # 8	1"
80-D	80A-3W	1	3 # 3	NA	1 # 8	1-1/4"
90-D	90A-3W	1	3 # 2	NA	1 # 8	1-1/4"
100-D	100A-3W	1	3 # 1	NA	1 # 8	1-1/4"
125-D	125A-3W	1	3 # 1	NA	1 # 6	1-1/2"
150-D	150A-3W	1	3 # 1/0	NA	1 # 6	2"
175-D	175A-3W	1	3 # 2/0	NA	1 # 6	2"
200-D	200A-3W	1	3 # 3/0	NA	1 # 6	2"
225-D	225A-3W	1	3 # 4/0	NA	1 # 4	2 1/2"
250-D	250A-3W	1	3 # 250 KCM	NA	1 # 4	2 1/2"
300-D	300A-3W	1	3 # 350 KCM	NA	1 # 4	3"
350-D	350A-3W	1	3 # 500 KCM	NA	1 # 2	4"
400-D	400A-3W	2	3 # 3/0	NA	1 # 2	3"
450-D	450A-3W	2	3 # 4/0	NA	1 # 2	3"
500-D	500A-3W	2	3 # 250 KCM	NA	1 # 2	3"
600-D	600A-3W	2	3 # 350 KCM	NA	1 # 1/0	4"
700-D	700A-3W	2	3 # 500 KCM	NA	1 # 1/0	4"

NOTE:
ALL CONDUCTOR SIZES ARE BASED ON TYPE THHN COPPER CONDUCTOR UNLESS OTHERWISE NOTED. THE AMPACITY OF CONDUCTORS SHALL BE BASED ON THE TERMINALS NOT TO EXCEED 60°C FOR CONDUCTOR SIZE #14 THROUGH #1 AWG OR 75°C FOR CONDUCTOR SIZE OVER #1 AWG AS PER NEC 110.14(C).

BONDING CONDUCTOR SCHEDULE

LABEL	SERVICE/O.C.P.D.	CONDUCTOR
BJC	30A-60A	#8
1-BJC	70A-100A	#6
2-BJC	125A-200A	#4
4-BJC	225A-400A	#1/0
6-BJC	450A-600A	#3/0
8-BJC	800A	#4/0
10-BJC	1000A	#4/0
12-BJC	1200A	#250 KCM
16-BJC	1600A	#300 KCM
20-BJC	2000A	#400 KCM
25-BJC	2500A	#500 KCM
30-BJC	3000A	#600 KCM
40-BJC	4000A	#750 KCM

NOTE:
ALL MAIN/SYSTEM/SUPPLY SIDE BONDING JUMPER CONDUCTOR SIZES ARE BASED ON TYPE BARE COPPER CONDUCTOR UNLESS OTHERWISE NOTED AND SIZED PER CEC TABLE 250.102(C)(1).

G.E.C. SCHEDULE

LABEL	SERVICE/O.C.P.D.	CONDUCTOR	CONDUIT
1-GEC	60A-100A	#6	3/4"
2-GEC	110A-200A	#4	1"
3-GEC	225A-400A	#1/0	1"
4-GEC	> 400A	#3/0	1-1/4"

NOTE:
ALL GROUNDING ELECTRODE CONDUCTOR SIZES ARE BASED ON BARE COPPER CONDUCTOR UNLESS OTHERWISE NOTED AND SIZE PER CEC TABLE 250.66.

600V FEEDER SCHEDULE 1Ø 2W

LABEL	TYPE	SETS	PHASE	NEUTRAL	GROUND	CONDUIT
20-S	20A-2W	1	2 # 12	N/A	1 # 12	3/4"
30-S	30A-2W	1	2 # 10	N/A	1 # 10	3/4"
40-S	40A-2W	1	2 # 8	N/A	1 # 10	1"
50-S	50A-2W	1	2 # 6	N/A	1 # 10	1"
60-S	60A-2W	1	2 # 6	N/A	1 # 10	1"
70-S	70A-2W	1	2 # 4	N/A	1 # 8	1"
80-S	80A-2W	1	2 # 3	N/A	1 # 8	1-1/4"
90-S	90A-2W	1	2 # 2	N/A	1 # 8	1-1/4"
100-S	100A-2W	1	2 # 1	N/A	1 # 8	1-1/4"
125-S	125A-2W	1	2 # 1	N/A	1 # 6	1-1/2"
150-S	150A-2W	1	2 # 1/0	N/A	1 # 6	2"
175-S	175A-2W	1	2 # 2/0	N/A	1 # 6	2"
200-S	200A-2W	1	2 # 3/0	N/A	1 # 6	2"

NOTE:
ALL CONDUCTOR SIZES ARE BASED ON TYPE THHN COPPER CONDUCTOR UNLESS OTHERWISE NOTED. THE AMPACITY OF CONDUCTORS SHALL BE BASED ON THE TERMINALS NOT TO EXCEED 60°C FOR CONDUCTOR SIZE #14 THROUGH #1 AWG OR 75°C FOR CONDUCTOR SIZE OVER #1 AWG AS PER NEC 110.14(C).

600V FEEDER SCHEDULE 3Ø 4W - XFMR SEC

LABEL	TYPE	SETS	PHASE	NEUTRAL	GROUND	CONDUIT
30-YX	30A-4W	1	3 # 10	1 # 10	1 # 8	3/4"
50-YX	50A-4W	1	3 # 6	1 # 6	1 # 8	1"
70-YX	70A-4W	1	3 # 4	1 # 4	1 # 8	1-1/4"
100-YX	100A-4W	1	3 # 1	1 # 1	1 # 6	2"
125-YX	125A-4W	1	3 # 1	1 # 1	1 # 6	2"
200-YX	200A-4W	1	3 # 3/0	1 # 3/0	1 # 4	2 1/2"
225-YX	225A-4W	1	3 # 4/0	1 # 4/0	1 # 2	2 1/2"
300-YX	300A-4W	1	3 # 350 KCM	1 # 350 KCM	1 # 2	3 1/2"
400-YX	400A-4W	1	3 # 600 KCM	1 # 600 KCM	1 # 1/0	4"
500-YX	600A-4W	2	3 # 350 KCM	1 # 350 KCM	1 # 2/0	3 1/2"
800-YX	800A-4W	2	3 # 600 KCM	1 # 600 KCM	1 # 3/0	4"
1000-YX	1000A-4W	3	3 # 500 KCM	1 # 500 KCM	1 # 4/0	4"
1200-YX	1200A-4W	3	3 # 600 KCM	1 # 600 KCM	1 #250 KCM	4"

NOTE:
ALL CONDUCTOR SIZES ARE BASED ON TYPE THHN COPPER CONDUCTOR UNLESS OTHERWISE NOTED. THE AMPACITY OF CONDUCTORS SHALL BE BASED ON THE TERMINALS NOT TO EXCEED 60°C FOR CONDUCTOR SIZE #14 THROUGH #1 AWG OR 75°C FOR CONDUCTOR SIZE OVER #1 AWG AS PER NEC 110.14(C).
GROUNDING CONDUCTOR SIZED PER TABLE 250.102(C)(1) FOR SEPARATELY DERIVED SYSTEMS.

ELECTRICAL LOAD CALCULATIONS
SOUTH FIRE STATION & ADMIN BUILDING

MAIN SWITCHBOARD MSA

		LOAD VA	LOAD AMPS
1	DISTRIBUTION BOARD 'DBFH' FIRE STATION	216818	261
2	DISTRIBUTION BOARD 'DBAD' ADMIN BUILDING	202719	244
	TOTAL LOAD INCLUDING NEC DEMAND FACTORS:	419536	505
	480Y/277V 3PH 4W NEW SWITCHBOARD MSA RATED:		1200

SINGLE LINE DIAGRAM | 1

STK
42095 ZEVO DR., TEMECULA, CALIFORNIA 92590-3780
Phone: 951.296.9110 Fax: 951.296.6079 Email: stk@stkinc.com

CONSULTANT:

REVIEWED FOR CODE COMPLIANCE

THIS PLAN CHECK APPROVAL IS FOR GENERAL CONFORMANCE WITH THE DESIGN CONCEPT OF THE PROJECT AND GENERAL COMPLIANCE WITH THE APPLICABLE CODES. IN ACCORDANCE WITH SECTION 105.4 OF THE CBC, CALIFORNIA CODES OF REGULATIONS, THE BUILDING OFFICIAL AND HIS/HER AUTHORIZED REPRESENTATIVES SHALL NOT BE RESPONSIBLE FOR THE DISCOVERY OR RESOLUTION OF ANY PROJECT CONFLICTS, DISCREPANCIES, OMISSIONS, OR ERRORS IN THE CONSTRUCTION DOCUMENTS. IN ADDITION, APPROVAL OF CONSTRUCTION DOCUMENTS SHALL NOT BE CONSTRUED AS AUTHORIZING ANY OPERATION OR ANY VIOLATION OF THE CODE OR OTHER ORDINANCES OF THE JURISDICTION.

DESIGN WEST ENGINEERING
MECHANICAL - ELECTRICAL - ENERGY CONSULTANTS
ARCHITECTURAL & ENGINEERING SERVICES
SUITE 100, 41870 KALMIA STREET
MURRIETA, CA 92562
951.304.0780
SOLUTIONS INC.

REGISTERED PROFESSIONAL ENGINEER
KENNETH KEMP
22839
ELECTRICAL
STATE OF CALIFORNIA

PROJECT ADMINISTERED BY:
CITY OF PERRIS

101 NORTH "D" STREET
PERRIS, CA 92570

PROJECT NAME:
SOUTH FIRE STATION AND ADMINISTRATIVE BUILDING

PROJECT CIP: F077

2495 MURRIETA ROAD
PERRIS, CA 92585

ISSUE INFORMATION:

DATE:	INFORMATION:
11-26-25	95% CD SUBMITTAL
02-05-26	1st PC RESPONSE
02-19-26	2nd PC RESPONSE

SHEET INFORMATION:
STK PROJECT NO.: 365-03-25
SCALE: AS NOTED
DATE: NOVEMBER 2025
PLOT DATE: –
DRAWN BY: JM / JM

SEAL:

SHEET TITLE:
SINGLE LIN

SWITCHBOARD
MSA

MOUNTING: FLOOR
FED FROM: SERVICE
NEMA: 1
A/C RATING: 65kAIC

VOLTAGE: 480Y/277V 3PH 4W
BUS: 1200 A
MAIN: 1200 A
FEEDER: 1200 -Y

LOCATION: FS ELECT RM

NOTE	DESCRIPTION	A	B	C	TYPE	POLE	AMP	AMP/PH	AMP/GRD	LENGTH	V.D. %	CONDUIT	PHASE	CONDUIT	V.D. %	LENGTH	AMP/PH	AMP	POLE	TYPE	A	B	C	DESCRIPTION	NOTE
	DISTRIBUTION BOARD DBFH	53642				3	600	2-#3/0	1#6	5.26	0.49	1	A - -	2			0.51	170	#10	20	1	R	37175			DISTRIBUTION BOARD DBAD	
	.....		52623			-	-	-	-	-	-	3	- B -	4			-	-	-	-	-	-		34543		.....	
	.....			53581		-	-	-	-	-	-	5	- - C	6			-	-	-	-	-	-			35477	.....	
	SPACE					3	20					7	A - -	8				200	3							SPARE
	.....					-	-					9	- B -	10				-	-							.....
	.....					-	-					11	- - C	12				-	-							.....
	SPACE					3						13	A - -	14				3								SPACE
	.....					-						15	- B -	16												.....
	.....					-						17	- - C	18												.....
	SPACE					3						19	A - -	20				3								SPACE
	.....					-						21	- B -	22												.....
	.....					-						23	- - C	24												.....

SUBTOTALS	53642	52623	53581
NEC/CEC LOAD CALC:	CONNECTED	DEMAND	DEMAND
LOAD TYPE	VA	FACTOR	VA
(L) LIGHTING	11103	1.25	13879
(R) RECEPTACLE	51696	NEC 220.44	30948
(M) MOTOR	149834	1.25	185793
LARGEST MOTOR		0.25	0
(C) CONTINUOUS	117720	1.25	147150
(N) NON-CONTINUOUS	16080	1.00	16080
(K) KITCHEN (NEC 220.56)	3480	0.65	2262
(S) SPECIAL DEMAND	18900	1.00	18900
TOTALS	367613		414911

TOTAL AMPS CONNECTED AT 480Y/277V 3PH 4W WITH LCL 499 A

SUBTOTALS:	PHASE
91117 VA	A
87166 VA	B
87558 VA	C
265841 VA	TOTAL
329	AMPS

SUBTOTALS	37175	34543	35477

NOTES:

DISTRIBUTION BOARD
DBFL

MOUNTING: SURFACE
FED FROM: TRANSFORMER TF5L
NEMA: 1
A/C RATING: 65kAIC

VOLTAGE: 208Y/120V 3PH 4W
BUS: 800 A
MAIN: 800 A
FEEDER: 800 -Y

LOCATION: FS ELECT RM

NOTE	DESCRIPTION	A	B	C	TYPE	POLE	AMP	AMP/PH	AMP/GRD	LENGTH	V.D. %	CONDUIT	PHASE	CONDUIT	V.D. %	LENGTH	AMP/PH	AMP	POLE	TYPE	A	B	C	DESCRIPTION	NOTE
	PANEL LFA	17158				3	225	#4/0	#4	15	0.07	2-1/2"	1 - A -	2	0.07	5	0.07	15	#8	20	1	R	11664			PANEL LFB	
	.....		19490			-	-	-	-	-	-		3 - B -	4										16382		.....	
	.....			18695		-	-	-	-	-	-		5 - - C	6											12406	.....	
	PANEL LFC	2907				3	225	#4/0	#4	15	0.02	2-1/2"	7 A - -	8	1*	1.54	115	#8	#4	70	3	S	6240			EXT DRIVER	
	.....		3130			-	-	-	-	-	-		9 - B -	10							-	5			6240	.....	
	.....			2783		-	-	-	-	-	-		11 - - C	12							-	5				.....	
	PANEL LFD					2	225	#4/0	#4	20	0.00	3-1/2"	13 A - -	14											6240	SPACE	
	.....					-	-	-	-	-	-		15 - B -	16												.....	
	SPACE												17 - - C	18												SPACE	
	SPACE												19 A - -	20												SPACE	
	SPACE												21 - B -	22												SPACE	
	SPACE												23 - - C	24												SPACE	

SUBTOTALS	19965	22620	21479
NEC/CEC LOAD CALC:	CONNECTED	DEMAND	DEMAND
LOAD TYPE	VA	FACTOR	VA
(L) LIGHTING	360	1.25	375
(R) RECEPTACLE	35716	NEC 220.47	22868
(M) MOTOR	75871	1.25	94839
LARGEST MOTOR		0.25	0
(C) CONTINUOUS	10560	1.25	13875
(N) NON-CONTINUOUS	5320	1.00	5320
(K) KITCHEN (NEC 220.56)	3480	0.65	2262
(S) SPECIAL DEMAND	18900	1.25	23625
TOTALS	154467		170442

TOTAL AMPS CONNECTED AT 208Y/120V 3PH 4W WITH LCL 473 A

SUBTOTALS:	PHASE
56666 VA	A
56242 VA	B
40124 VA	C
117435 VA	TOTAL
334	AMPS

SUBTOTALS	19164	16622	19548

NOTES:
1. PROVIDE BREAKER WITH LOCK-OFF CAPABILITY.

PANEL
LFA

MOUNTING: SURFACE
FED FROM: DBFL
NEMA: 1
A/C RATING: 10kAIC

VOLTAGE: 208Y/120V 3PH 4W
BUS: 225 A
MAIN: 225 A
FEEDER: 225 -Y

LOCATION: FS ELECT RM

NOTE	DESCRIPTION	A	B	C	TYPE	POLE	AMP	AMP/PH	AMP/GRD	LENGTH	V.D. %	CONDUIT	PHASE	CONDUIT	V.D. %	LENGTH	AMP/PH	AMP	POLE	TYPE	A	B	C	DESCRIPTION	NOTE
	GENERATOR BATTERY CHARGER	1500			N	1	30	#8	#8	175	2.78	1"	1 A - -	2	1"	0.51	170	#10	#10	20	1	R	180			GENERATOR RECEPTACLE	
	GENERATOR JACKET HEATER		1500		N	2	30	#8	#8	175	2.78	1"	3 - B -	4	1"	2.60	200	#8	#8	30	2	R		1920		GATE OPERATOR MOTOR	
	FUEL DISPENSER			200	N	3	20	#10	#10	160	0.53	1"	5 - - C	6	1"	0.69	110	#10	#10	20	1	R			540	STORAGE BUILDING REC.	
	FUEL CONTROL TERMINAL	200			N	1	20	#10	#10	180	0.53	1"	7 A - -	8	3/4"	0.73	150	#12	#12	20	1	R	180			REC - BATH 2	
	EV CHARGER #1 PORT #1		3600		C	1	40	#8	#8	175	2.12	1"	9 - B -	10	3/4"	0.85	180	#12	#12	20	1	R		180		REC - BATH 3	
	.....			3600	C	-	-	-	-	-	-	11	- - C	12	3/4"	2.72	163	#12	#12	20	1	R			600	CEILING FAN DINING	
	REC - OFFICE 1	900			R	1	20	#12	#12	95	2.38	3/4"	13 A - -	14	3/4"	2.75	165	#12	#12	20	1	R	600			CEILING FAN DINING	
	REC - OFFICE 2		1080		R	1	20	#10	#10	115	2.07	3/4"	15 - B -	16	3/4"	0.85	170	#12	#12	20	1	R		180		REC - BATH 3	
	REC - OFFICE 3			1080	R	1	20	#10	#10	125	2.25	3/4"	17 - - C	18	1"	2.77	170	#8	#8	40	2	C			3600	EV CHARGER #1 PORT #1	
	REC - DAY ROOM	540			R	1	20	#12	#12	185	3.34	3/4"	19 A - -	20	3/4"	1.65				30	2	R		3600		.....	
	REC - DAY ROOM		1080		R	1	20	#10	#10	185	2.97	3/4"	21 - B -	22	3/4"	0.85	180	#12	#12	20	1	R			180	REC - BATH 4	
	REC - DAY ROOM			720	R	1	20	#10	#10	175	2.16	3/4"	23 - - C	24	3/4"	0.85	180	#12	#12	20	1	R		180		REC - BATH 5	
	REC - EXERCISE ROOM	540			R	1	20	#12	#12	195	2.83	3/4"	25 A - -	26	3/4"	1.25	125	#12	#12	20	1	R	360			REC - LAUNDRY ROOM	
	REC - EXERCISE ROOM		540		R	1	20	#10	#10	205	1.85	3/4"	27 - B -	28	3/4"	3.00	200	#10	#10	20	1	R		900		REC - HALLWAY 1	
	REC - EXERCISE ROOM			540	R	1	20	#10	#10	215	1.94	3/4"	29 - - C	30	3/4"	3.50	125	#12	#12	20	1	R			540	REC - HALLWAY 1-2	
	REC - EXERCISE ROOM	540			R	1	20	#10	#10	220	1.98	3/4"	31 A - -	32	3/4"	2.10	105	#12	#12	20	1	R	720			REC - LOBBY	
	REC - EXERCISE ROOM		360		R	1	20	#12	#12	200	2.50	3/4"	33 - B -	34	3/4"	2.50	125	#10	#10	20	1	R			1200	REC - REFRIGERATOR	
	LTG - UNDERCABINET KITCHEN			55	L	1	20	#12	#12	155	0.24	3/4"	35 - - C	36	3/4"	3.50	125	#10	#10	20	1	R			1200	REC - REFRIGERATOR	
	CEILING FAN EXERCISE	600			R	1	20	#12	#12	175	2.82	3/4"	37 A - -	38	3/4"	1.55	155	#12	#12	20	1	R	360			REC - KITCHEN	
	CEILING FAN EXERCISE		600		R	1	20	#12	#12	165	2.75	3/4"	39 - B -	40	3/4"	1.75	175	#12	#12	20	1	R		360		REC - KITCHEN	
	CEILING FAN DAY ROOM	600			R	1	20	#12	#12	155	2.58	3/4"	41 - - C	42	3/4"	1.74	174	#12	#12	20	1	R		360		REC - KITCHEN	
	CEILING FAN DAY ROOM			600	R	1	20	#12	#12	145	2.41	3/4"	43 A - -	44	3/4"	2.78	185	#12	#12	20	1	R	540			REC - KITCHEN	
	CEILING FAN PATIO		600		R	1	20	#10	#10	195	1.85	3/4"	45 - B -	46	3/4"	2.63	225	#10	#10	20	1	R		540		REC - PATIO	
	REC - APP BAY	540			R	1	20	#12	#12	85	1.26	3/4"	47 A - -	48	3/4"	2.48	275	#10	#10	20	1	R	540			REC - EXTERIOR	
	REC - ELECTURIN OUT	360			R	1	20	#12	#12	75	0.75	3/4"	49 A - -	50	3/4"	0.85	85	#12	#12	20	1	R	360			REC - APP BAY MAINT.	
	REC - VESTUTILITY		540		R	1	20	#12	#12	110	1.65	3/4"	51 - B -	52	3/4"	1.54	75	#12	#12	20	1	R		750		REC - ICE MACHINE	
	REC - APP BAY RESTROOM			180	R	1	20	#12	#12	85	0.48	3/4"	53 - - C	54	3/4"	1.15	115	#12	#12	20	1	R			360	REC - APP BAY	
	REC - TREADMIL	1536			R	3	20	#8	#8	185	3.08	1"	55 A - -	56	3/4"	1.67	125	#12	#12	20	1	R	900			REC - COMM ROOM	
	REC - COMM RM		500		R	1	20	#12	#12	115	1.60	3/4"	57 - B -	58	3/4"	1.15	115	#12	#12	20	1	R		500		REC - COMM ROOM	
	STORAGE ELDG FAN			600	M	1	20	#10	#10	85	0.85	3/4"	59 - - C	60	3/4"	0.85	15	#12	#12	20	1	R			360	REC - TELECOM BCKBRD	
	REC - APP BAY WAP	650			R	1	20	#12	#12	75	1.25	3/4"	61 A - -	62	3/4"	0.24	53	#12	#12	20	1	R	92			CP-1	
	REC - DISHWASHER		650		R	1	20	#12	#12	145	2.05	3/4"	63 - B -	64	3/4"	1.55	155	#12	#12	20	1	R		650		REC - DISHWASHER	
	REC - GARBAGE DISPOSAL			750	R	1	20	#12	#12	137	2.85	3/4"	65 - - C	66	3/4"	2.53	140	#12	#12	20	1	R		650		REC - ICE MACHINE	
	REC - SNKING APPLIANCE	1200			R	1	20	#12	#12	175	3.50	3/4"	67 A - -	68	3/4"	1.54	137	#12	#12	20	1	R	500			REC - WATER	
	REC - WASHER		900		R	1	20	#12	#12	117	2.93	3/4"	69 - B -	70	3/4"	0.59	115	#12	#12	20	1	R		180		REC - DRYER	
	REC - APP BAY			800	R	1	20	#10	#10	200	3.00	3/4"	71 - - C	72	3/4"	0.59	125	#10	#10	15	1	C				SIGN LIGHTING	
	SPARE					1	20						73 A - -	74						20	1					SPARE	
	SPARE					1	20						75 - B -	76						20	1					SPARE	
	SPACE												77 - - C	78												SPACE	
	SPACE												79 A - -	80												SPACE	
	SPACE												81 - B -	82												SPACE	
	SPACE												83 - - C	84												SPACE	

SUBTOTALS	9156	11950	8755
NEC/CEC LOAD CALC:	CONNECTED	DEMAND	DEMAND
LOAD TYPE	VA	FACTOR	VA
(L) LIGHTING	55	1.25	69
(R) RECEPTACLE	27196	NEC 220.47	18998
(M) MOTOR	4892	1.25	6115
LARGEST MOTOR		0.25	0
(C) CONTINUOUS	14400	1.25	18000
(N) NON-CONTINUOUS	5320	1.00	5320
(K) KITCHEN (NEC 220.56)	3480	0.65	2262
(S) SPECIAL DEMAND	0	1.00	0
TOTALS	53343		59764

TOTAL AMPS CONNECTED AT 208Y/120V 3PH 4W WITH LCL 140 A

SUBTOTALS:	PHASE
17158 VA	A
19490 VA	B
18695 VA	C
55343 VA	TOTAL
162	AMPS

SUBTOTALS	7992	7540	8030

NOTES:

PANEL
LFB

MOUNTING: SURFACE
FED FROM: LFA
NEMA: 1
A/C RATING: 10kAIC

VOLTAGE: 208Y/120V 3PH 4W
BUS: 225 A
MAIN: 225 A
FEEDER: 225 -Y

LOCATION: FS ELECT RM

NOTE	DESCRIPTION	A	B	C	TYPE	POLE	AMP	AMP/PH	AMP/GRD	LENGTH	V.D. %	CONDUIT	PHASE	CONDUIT	V.D. %	LENGTH	AMP/PH	AMP	POLE	TYPE	A	B	C	DESCRIPTION	NOTE
	REC - EXTERIOR WAINT	360			R	1	20	#12	#12	235	2.31	3/4"	1 A - -	2	3/4"	1.59	264	#10	#10	20	1	R	360			REC - EXTERIOR WAINT	
	WH-1		600		M	2	30	#6	#6	185	1.83	1"	3 - B -	4	3/4"	2.43	215	#6	#6	30	2	M		600		WH-2	
	CU-11			2288	M	2	35	#6	#6	252	2.41	1"	5 - - C	6	1"	3.43	215	#6	#6	30	2	M			2496	CU-13	
	.....	2288			M	-	-	-	-	-	-	7	A - -	8							-	M	2496			.....	
	CU-12		2288		M	2	35	#6	#6	225	2.33	1"	9 - B -	10	3/4"	1.74	179	#14	#12	15	2	M		534		FC-11	
	.....			2288	M	-	-	-	-	-	-	11	- - C	12							-	M			534	.....	
	FC-12	780			R	1	20	#12	#14	177	2.55	3/4"	13 A - -	14	3/4"	1.43	154	#12	#12	20	2	M	780			FC-13	
	.....		780		M	-	-	-	-	-	-	15	- B -	16							-	M		780		.....	
	APP BAY ROLL-UP DOOR - N			800	M	3	20	#12	#12	138	1.53	3/4"	17 - - C	18	3/4"	1.66	85	#12	#12	20	3	M			800	APP BAY ROLL-UP DOOR - S	
	.....	800			M	-	-	-	-	-	-	19	A - -	20							-	M	800			.....	
	.....		800		M	-	-	-	-	-	-	21	- B -	22							-	M		800		.....	
	APP BAY ROLL-UP DOOR - N			800	M	3	20	#12	#12	121	1.34	3/4"	23 - - C	24	3/4"	0.84	77	#12	#12	20	3	M			800	APP BAY ROLL-UP DOOR - S	
	.....	800			M	-	-	-	-	-	-	25	A - -	26							-	M	800			.....	
	.....		800		M	-	-	-	-	-	-	27	- B -	28							-	M		800		.....	
	APP BAY ROLL-UP DOOR - N			800	M	3	20	#12	#12	104	1.16	3/4"	29 - - C	30	3/4"	0.84	58	#12	#12	20	3	M			800	APP BAY ROLL-UP DOOR - S	
	.....	800			M	-	-	-	-	-	-	31	A - -	32							-	M	800			.....	
	.....		800		M	-	-	-	-	-	-	33	- B -	34							-	M		800		.....	
	SPACE											35	- - C	36												SPACE	
	SPACE											37	A - -	38												SPACE	
	SPACE											39	- B -	40												SPACE	
	SPACE											41	- - C	42												SPACE	

SUBTOTALS	5828	6068	6876
NEC/CEC LOAD CALC:	CONNECTED	DEMAND	DEMAND
LOAD TYPE	VA	FACTOR	VA
(L) LIGHTING	0	1.25	0
(R) RECEPTACLE	720	NEC 220.47	720
(M) MOTOR	32732	1.25	40915
LARGEST MOTOR		0.25	0
(C) CONTINUOUS	1200	1.25	1500
(N) NON-CONTINUOUS	0	1.00	0
(K) KITCHEN (NEC 220.56)	0	0.65	0
(S) SPECIAL DEMAND	0	1.00	0
TOTALS	34852		43135

TOTAL AMPS CONNECTED AT 208Y/120V 3PH 4W WITH LCL 120 A

SUBTOTALS:	PHASE
11664 VA	A
10392 VA	B
12496 VA	C
34852 VA	TOTAL
103	AMPS

SUBTOTALS	8036	4314	5430

NOTES:

PANEL
HA

MOUNTING: SURFACE
FED FROM: DBAD
NEMA: 1
A/C RATING: 65kAIC

VOLTAGE: 480Y/277V 3PH 4W
BUS: 200 A
MAIN: WLO
FEEDER: 200 -Y

LOCATION: ADMIN ELECT RM

NOTE	DESCRIPTION	A	B	C	TYPE	POLE	AMP	AMP/PH	AMP/GRD	LENGTH	V.D. %	CONDUIT	PHASE	CONDUIT	V.D. %	LENGTH	AMP/PH	AMP	POLE	TYPE	A	B	C	DESCRIPTION	NOTE
	LTG - INTERIOR EAST	1245			L	1	20	#12	#12	315	2.04	3/4"	1 A - -	2	3/4"	1.53	235	#12	#12	20	1	R	678			LTG - INTERIOR WEST	
1	LTG - EXTERIOR BLDG		1160		L	1	20	#10	#10	200	0.73	3/4"	3 - B -	4												SPARE	
	LTG CONTROL PANEL			600	C	1	20	#12	#12	5	0.02	3/4"	5 - - C	6	3/4"	0.38	105	#10	#10	20	1	L			900	LTG - SITE	1
	LTG - SIGN	80			L	1	20	#10	#10	95	0.02	3/4"	7 A - -	8							20	1				SPARE	
	SPACE												9 - B -	10												SPACE	
	SPACE												11 - - C	12												SPACE	
	SPACE												13 A - -	14												SPACE	
	SPACE												15 - B -	16												SPACE	
	SPACE												17 - - C	18												SPACE	
	SPACE												19 A - -	20												SPACE	
	SPACE												21 - B -	22												SPACE	
	SPACE												23 - - C	24												SPACE	
	SPACE												25 A - -	26												SPACE	
	SPACE												27 - B -	28												SPACE	
	SPACE												29 - - C	30												SPACE	
	SPACE												31 A - -	32												SPACE	
	SPACE												33 - B -	34												SPACE	
	SPACE												35 - - C	36												SPACE	
	SPACE												37 A - -	38												SPACE	
	SPACE												39 - B -	40												SPACE	
	SPACE												41 - - C	42												SPACE	

SUBTOTALS	1525	1160	600
NEC/CEC LOAD CALC:	CONNECTED	DEMAND	DEMAND
LOAD TYPE	VA	FACTOR	VA
(L) LIGHTING	4283	1.25	5329
(R) RECEPTACLE	0	NEC 220.47	0
(M) MOTOR	0	1.25	0
LARGEST MOTOR		0.25	0
(C) CONTINUOUS	600	1.25	750
(N) NON-CONTINUOUS	0	1.00	0
(K) KITCHEN (NEC 220.56)	0	0.65	0
(S) SPECIAL DEMAND	0	1.00	0
TOTALS	4883		6079

TOTAL AMPS CONNECTED AT 480Y/277V 3PH 4W WITH LCL 7 A

SUBTOTALS:	PHASE
2300 VA	A
1160 VA	B
1500 VA	C
4957 VA	TOTAL
8	AMPS

SUBTOTALS	678	0	900

NOTES:
1. ROUTE CIRCUIT VIA LIGHTING CONTROL PANEL

PANEL
LA

MOUNTING: SURFACE
FED FROM: TLA
NEMA: 1
A/C RATING: 22kAIC

VOLTAGE: 208Y/120V 3PH 4W
BUS: 400 A
MAIN: 400 A
FEEDER: 400 -YX

LOCATION: ADMIN ELECT RM

NOTE	DESCRIPTION	A	B	C	TYPE	POLE	AMP	AMP/PH	AMP/GRD	LENGTH	V.D. %	CONDUIT	PHASE	CONDUIT	V.D. %	LENGTH	AMP/PH	AMP	POLE	TYPE	A	B	C	DESCRIPTION	NOTE
	GATE OPERATOR MOTOR	1920			N	1	20	#10	#10	75	2.40	1"	1 A - -	2	3/4"	0.21	15	#14	#12	15	1	N	506			EF-5A	
	TRAINING ROM # 1		600		M	1	20	#12	#12	40	0.67	3/4"	3 - B -	4	3/4"	0.13	30	#14	#12	15	1	N		47		EF-3A	
	TRAINING ROM # 2			600	M	1	20	#12	#12	50	0.83	3/4"	5 - - C	6	3/4"	0.14	105	#14	#12	15	1	N			47	EF-2B	
	TRAINING ROM # 3	600			M	1	20	#12	#12	60	1.00	3/4"	7 A - -	8	3/4"	0.46	115	#14	#12	15	1	N	144			EF-8A	
	TRAINING ROM # 4		600		M	1	20	#12	#12	70	1.17	3/4"	9 - B -	10							20	1	S		MAIN:		SPARE	
	CU-3A			2288	M	2	30	#10	#10	61	1.55	3/4"	11 - - C	12							30	2	N			2288	CU-2A	
	.....	2288			M	-	-	-	-	-	-		13 A - -	14							-	M	2288			.....	
	CU-3A		2288		M	2	35	#10	#10	55	1.40	3/4"	15 - B -	16	3/4"	1.88	67	#10	#10	30	2	N		2496		CU-4A	
	.....			2288	M	-	-	-	-	-	-		17 - - C	18							-	M			2496	.....	
	CU-5A	2496			M	2	35	#10	#10	57	1.58	3/4"	19 A - -	20	3/4"	1.18	82	#14	#12	15	2	N	780			FC-1A	
	.....		2496		M	-	-	-	-	-	-		21 - B -	22							-	M		780		.....	
	FC-3A	780			M	2	15	#12	#14	82	1.18	3/4"	23 - - C	24	3/4"	0.77	78	#14	#12	15	2	N			534	FC-2A	
	.....		780		M	-	-	-	-	-	-		25 A - -	26							-	M	534			.....	
	FC-4A			780	M	2	15	#12	#14	78	1.13	3/4"	27 - B -	28	3/4"	1.17	81	#14	#12	15	2	N	780			FC-3A	
	PANEL LC	8670				3	125	#1	#6	15	0.15	1-1/2"	29 - - C	30							-	M			780	.....	
	.....		11160			-	-	-	-	-	-		31 A - -	32	3/4"	1.11	68	#14	#12	15	3	N	1170			DEV-2	
	.....			11160		-	-	-	-	-	-		33 - B -	34							-	M		1170		.....	
	PANEL LB	11700				3	125	#1	#6	10	0.12	1-1/2"	35 - - C	36							-	M			1170	.....	
	.....		10100			-	-	-	-	-	-		37 A - -	38							20	1				SPARE	
	.....			8700		-	-	-	-	-	-		39 - B -	40							20	1				SPARE	
													41 - - C	42							20	1				SPARE	

SUBTOTALS	29544	29104	28856
NEC/CEC LOAD CALC:	CONNECTED	DEMAND	DEMAND
LOAD TYPE	VA	FACTOR	VA
(L) LIGHTING	0	1.25	0
(R) RECEPTACLE	7960	NEC 220.47	7960
(M) MOTOR	37982	1.25	47115
LARGEST MOTOR		0.25	0
(C) CONTINUOUS	50310	1.25	62888
(N) NON-CONTINUOUS	6340	1.00	6340
(K) KITCHEN (NEC 220.56)	0	0.65	0
(S) SPECIAL DEMAND	0	1.00	0
TOTALS	103152		124303

TOTAL AMPS CONNECTED AT 208Y/120V 3PH 4W WITH LCL 345 A

SUBTOTALS:	PHASE
34972 VA	A
33393 VA	B
35877 VA	C
102332 VA	TOTAL
291	AMPS

SUBTOTALS	5428	5270	7321

NOTES:

PANEL
LB

MOUNTING: SURFACE
FED FROM: LA
NEMA: 1
A/C RATING: 22kAIC

VOLTAGE: 208Y/120V 3PH 4W
BUS: 125 A
MAIN: WLO
FEEDER: 125 -Y

LOCATION: ADMIN ELECT ROOM

| NOTE | DESCRIPTION | A | B |

GENERAL NOTES

1. ELECTRICAL CONTRACTOR MUST OBTAIN APPROVED CONSTRUCTION DRAWINGS FROM THE RESPECTIVE UTILITY COMPANIES AND INCLUDE ALL MATERIAL AND WORK AS INDICATED THEREON IN THIS BID PRICE. IF UTILITY DRAWINGS ARE NOT AVAILABLE WHEN BIDS ARE SUBMITTED, SO INDICATE AND ADVISE ELECTRICAL ENGINEER OF RECORD ACCORDINGLY.
2. ELECTRICAL CONTRACTOR SHALL VERIFY EXACT LOCATION OF UTILITY PANELS, CONDUIT, AND TRANSFORMER WITH RESPECTIVE UTILITY COMPANIES PRIOR TO START OF ANY SITE WORK.
3. ALL UTILITY SERVICES SHALL BE INSTALLED PER THE UTILITY COMPANY REQUIREMENTS. VERIFY FINAL CONSTRUCTION REQUIREMENTS WITH UTILITY COMPANY SERVICE PLANNERS.
4. MINIMUM CONDUITS SHOWN. CONTRACTOR SHALL PROVIDE ADDITIONAL CONDUITS AS NECESSARY TO MEET THE UTILITY COMPANY'S MINIMUM REQUIREMENTS. SEE DRY UTILITY PLANS FOR PROPOSED ROUTING AND ADDITIONAL INFORMATION. COORDINATE WITH SERVING UTILITY COMPANY AND ADHERE TO THEIR REQUIREMENTS.
5. THE CONTRACTOR SHALL INSPECT AND VERIFY ALL FIELD CONDITIONS PRIOR TO INSTALLATION OF UTILITY SERVICES.
6. COORDINATE TRENCH ROUTING AND EQUIPMENT LOCATIONS WITH EXISTING CONDITIONS AND NEW WORK.
7. UTILITY SERVICE INFORMATION SHOWN IS FOR BIDDING PURPOSES ONLY. ACTUAL CONSTRUCTION DOCUMENTS SHALL BE OBTAINED FROM THE APPROPRIATE UTILITY COMPANY REPRESENTATIVE.
8. THE CONTRACTOR SHALL CONTACT THE UTILITY COMPANY REPRESENTATIVE TO ESTABLISH PRE-CONSTRUCTION COORDINATION, OBTAIN ALL NECESSARY METERS AND/OR APPROVALS, AND SCHEDULE UTILITY WORK TO COORDINATE WITH THE CONSTRUCTION SCHEDULE.
9. ALL SITE BRANCH CIRCUIT WIRING SHALL BE #10 AWG. OR LARGER.
10. CONTRACTOR SHALL VERIFY EXISTING BUILDING FOOTING PRIOR TO INSTALLATION OF STUB-UP CONDUITS FOR NEW WALL MOUNTED JUNCTION BOX TO AVOID ANY INTERFERENCE.
11. CONTRACTOR SHALL UTILIZE 'GPR' GROUND PENETRATING RADAR TO SURVEY AND TRACE ALL EXISTING UNDERGROUND UTILITY LINES IN AREAS WHERE NEW TRENCHING IS PLANNED. CONTRACTOR TO SUBMIT "GPR" REPORT TO PROJECT MANAGER FOR REVIEWING PRIOR TO TRENCHING.
12. ALL POWER UTILITY WORK SHALL BE IN COMPLIANCE WITH THESE DRAWINGS AND THE REQUIREMENTS OF THE SERVING UTILITY COMPANY. IT SHALL BE THE CONTRACTOR'S RESPONSIBILITY TO CONTACT THE SERVING UTILITY TO RECEIVE COMPLETE INFORMATION ON THEIR REQUIREMENTS PRIOR TO THE SUBMISSION OF THE BID. THE ACT OF SUBMITTING THE BID SHALL CONSTITUTE ACCEPTANCE OF FULL RESPONSIBILITY BY THE CONTRACTOR TO INSTALL SERVICE IN COMPLIANCE WITH THE SERVING UTILITY AND THE CONTRACT DOCUMENTS.
13. ALL SITE UNDERGROUND CONDUIT TO BE 1" MIN. UNLESS OTHERWISE NOTED.
14. SUPPORT CONDUIT(S) EVERY 10'-0" AND WITHIN 3'-0" OF ANY JUNCTION BOX OR TERMINATION.
15. CONTACT INFORMATION FOR UTILITY COMPANIES ARE AS FOLLOWS:

POWER:	SCE - (760) 285-3234	
TELEPHONE:	FRONTIER - (855) 981-4538	
FIBER:	SPECTRUM - (833) 949-0036	

16. CONTRACTOR IS TO CONTACT UTILITY INSPECTOR (LISTED ON FINAL UTILITY APPROVED PLANS) TO SCHEDULE A PRE-CONSTRUCTION MEETING PRIOR TO ALL UTILITY CONSTRUCTION.

CONSTRUCTION NOTES

1. PROVIDE (1) 5" UNDERGROUND CONDUIT MINIMUM FOR PRIMARY UTILITY FEEDERS PER APPROVED SCE DRAWING. COORDINATE WITH APPROVED UTILITY DRAWINGS.
2. PROVIDE (4) 4" UNDERGROUND CONDUITS MINIMUM FOR SECONDARY UTILITY FEEDERS PER APPROVED SCE DRAWING. COORDINATE WITH APPROVED UTILITY DRAWINGS.
3. PROVIDE DEDICATED CIRCUIT IN 1"C. FOR GATE MOTOR.
4. CONNECT LUMINAIRE TO PHOTOCELL FOR CONTROL. AIM TO ASSUMED FLAG POSITION ON POLE, INCLUDING HALF-MAST POSITION.
5. PRIMARY UTILITY ROUTE TO BORE UNDERNEATH STREET. VERIFY ROUTE WITH SCE PRIOR TO CONSTRUCTION START. CONTRACTOR TO PROVIDE ALL NECESSARY BORING EQUIPMENT, STREET STAGING AND TRAFFIC CONTROL AS NECESSARY FOR A COMPLETE INSTALLATION.
6. CONTRACTOR TO FIELD VERIFY EXISTING POLE LOCATION AND MAKE NECESSARY ADJUSTMENTS TO UNDERGROUND CONDUIT ROUTE.
7. PROVIDE AND INSTALL (1) 4" C.O. WITH PULL ROPE TO SOUTH DEMARCATION POINT OF PROPERTY. FRONTIER TO INTERCEPT 4" CONDUIT AND PROVIDE 2'X3' HANDHOLE.
8. PROVIDE 1 1/4" CONDUIT WITH CAT6 CABLE FOR DATA CONNECTION TO EV CHARGER BACK TO COMM ROOM IN ADMINISTRATION BUILDING.
9. PROVIDE UNDERGROUND PULLBOX FOR COMMUNICATIONS.
10. REFER TO SINGLE LINE DIAGRAM FOR MORE INFORMATION FOR CONDUIT AND CONDUCTOR SIZES (TYP.)
11. PROVIDE HOUSEKEEPING PAD, MINIMUM 6" ABOVE GRADE. COORDINATE SIZE AND THICKNESS OF PAD WITH STRUCTURAL.
12. UNDERGROUND PULLSECTION PER POWER UTILITY SERVICE REQUIREMENTS. SEE SINGLELINE DIAGRAM(S) FOR FURTHER INFORMATION. PROVIDE MINIMUM CLEARANCES AS REQUIRED BY THE SERVICE UTILITY COMPANY.
13. PROVIDE (1)1" C.O. TO TELEPHONE BACKBOARD FOR P.I.V. LOCATION. VERIFY PRIOR TO ROUGH-IN.
14. CHARGEPOINT DUAL-PORT CHARGER, MODEL CT4021. PROVIDE ALL NECESSARY COMPONENTS FOR A COMPLETE INSTALLATION.
15. PROVIDE 1 1/4" CONDUIT WITH CAT6 CABLE FOR DATA CONNECTION TO EV CHARGER BACK TO COMM ROOM IN FIRE STATION.
16. PROVIDE (1) 2" C.O. WITH PULLSTRING FROM FIRE STATION ELECTRICAL ROOM FOR POWER TO ELECTRICAL PULLBOX FOR FUTURE EV CHARGING STATION.
17. PROVIDE (1) 1 1/4" C.O. WITH PULLSTRING FROM FIRE STATION COMM ROOM FOR DATA TO DATA PULLBOX FOR FUTURE EV CHARGING STATION.
18. PROVIDE (1) 2" C.O. WITH PULLSTRING FROM ADMIN BUILDING ELECTRICAL ROOM FOR POWER TO ELECTRICAL PULLBOX FOR FUTURE EV CHARGING STATION.
19. PROVIDE (1) 1 1/4" C.O. WITH PULLSTRING FROM ADMIN BUILDING COMM ROOM FOR DATA TO DATA PULLBOX FOR FUTURE EV CHARGING STATION.
20. ALL BACK EXTERIOR LIGHTING FOR FIRE STATION TO BE ROUTED THROUGH OVER-RIDE SWITCHING. SWITCHES TO BE LOCATED IN APPARATUS BAY, SEE FIRE STATION LIGHTING PLAN. (E3.1)
21. VERIFY SWITCH LEGS SHOWN ARE APPROPRIATE WITH CITY PRIOR TO ROUGH-IN.
22. PROVIDE DUAL-CHANNEL LOOP DETECTOR AND GATE LOOPS AS SHOWN. LOOP DETECTOR SHALL BE DOORKING MODEL# 9409-010 OR APPROVED EQUAL.
23. PROVIDE (1) 1" C.O. FOR LOW VOLTAGE CONNECTION TO GATE LOOPS.
24. MOUNT PROGRAMMABLE STAND ALONE DIGITAL KEYPAD ONTO POST. KEYPAD SHALL BE DOORKING MODEL#1506-086 OR APPROVED EQUAL.
25. PROVIDE (1) 1" C.O. FOR LOW VOLTAGE CONNECTION BETWEEN GATE MOTOR AND KEY PAD.
26. CHARGEPOINT SINGLE-PORT CHARGER, MODEL CT4011. PROVIDE ALL NECESSARY COMPONENTS FOR A COMPLETE INSTALLATION.

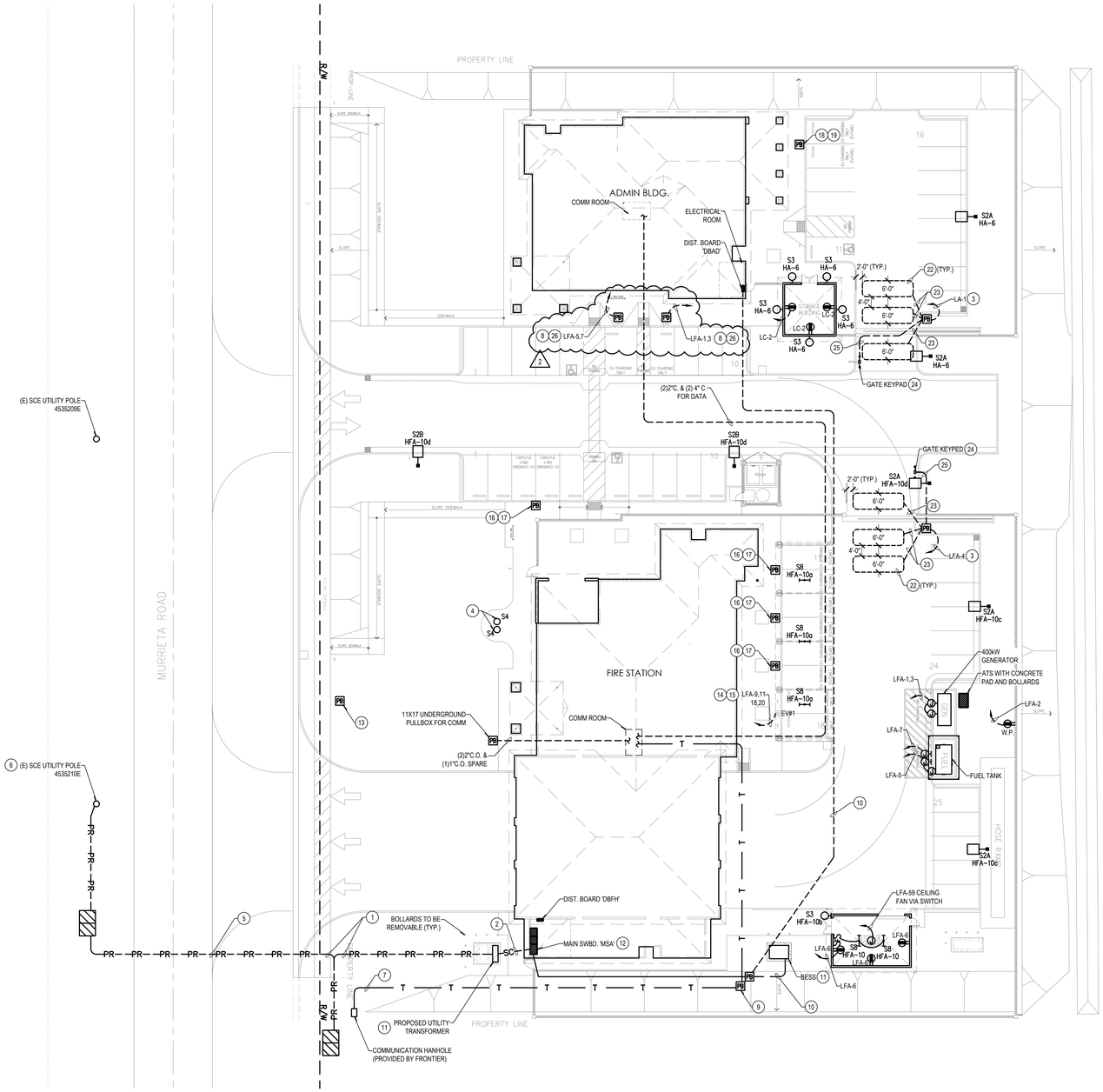

ELECTRICAL SITE PLAN

SCALE: 1"=20'-0"

1

STK ARCHITECTURE, INC.
42095 ZEVO DR., TEMECULA, CALIFORNIA 92590-3780
Phone: 951.296.9110 Fax: 951.296.6079 Email: stk@stkinc.com

CONSULTANT:

REVIEWED FOR CODE COMPLIANCE

THESE DRAWINGS AND DOCUMENTS HAVE BEEN REVIEWED AND FOUND TO BE IN SUBSTANTIAL COMPLIANCE WITH THE 2022 CALIFORNIA BUILDING CODE. THIS REVIEW IS LIMITED TO THE SCOPE OF WORK AS DESCRIBED IN THE PLANS AND DOES NOT INCLUDE ANY OTHER WORK OR CONDITIONS. THE CONTRACTOR IS RESPONSIBLE FOR CONSTRUCTION IN ACCORDANCE WITH ALL APPLICABLE CODES AND REGULATIONS. THE CONTRACTOR SHALL VERIFY AND COORDINATE ALL DIMENSIONS, CONDITIONS, AND CONSTRUCTION METHODS PRIOR TO COMMENCING WORK. ANY DEVIATIONS FROM THE APPROVED PLANS MUST BE REVIEWED AND APPROVED BY THE BUILDING OFFICIAL BEFORE CONSTRUCTION. THIS REVIEW DOES NOT AUTHORIZE VIOLATIONS OF ANY APPLICABLE CODE OR REGULATION.

BUILDING OFFICIAL
CITY OF PERRIS
DATE: 05/05/2026

DESIGN WEST ENGINEERING
MECHANICAL / ELECTRICAL / ENERGY CONSULTANTS
BUILDING ENERGY SOLUTIONS INC.

REGISTERED PROFESSIONAL ENGINEER
GLENN KOZA
22839
SIGNED 05/05/2026
ELECTRICAL
STATE OF CALIFORNIA

PROJECT ADMINISTERED BY:

CITY OF PERRIS

101 NORTH "D" STREET
PERRIS, CA 92570

PROJECT NAME:

SOUTH FIRE STATION AND ADMINISTRATIVE BUILDING

PROJECT CIP: F077

2495 MURRIETA ROAD
PERRIS, CA 92585

ISSUE INFORMATION:

DATE:	INFORMATION:
11-26-25	95% CD SUBMITTAL
02-05-26	1st PC RESPONSE
02-19-26	2nd PC RESPONSE
04-27-26	4th PC RESPONSE

SHEET INFORMATION:

STK PROJECT NO.:	365-03-25
SCALE:	AS NOTED
DATE:	NOVEMBER 2025
PLOT DATE:	–
DRAWN BY:	JM / JM

SEAL:

SHEET TITLE:

ELECTRICAL SITE PLAN

SHEET NO.:

E1.0

05/05/2026 10:58AM P:\PROJECTS\2025\25-114 perris fire station_CAD\25-114 E-Site.dwg

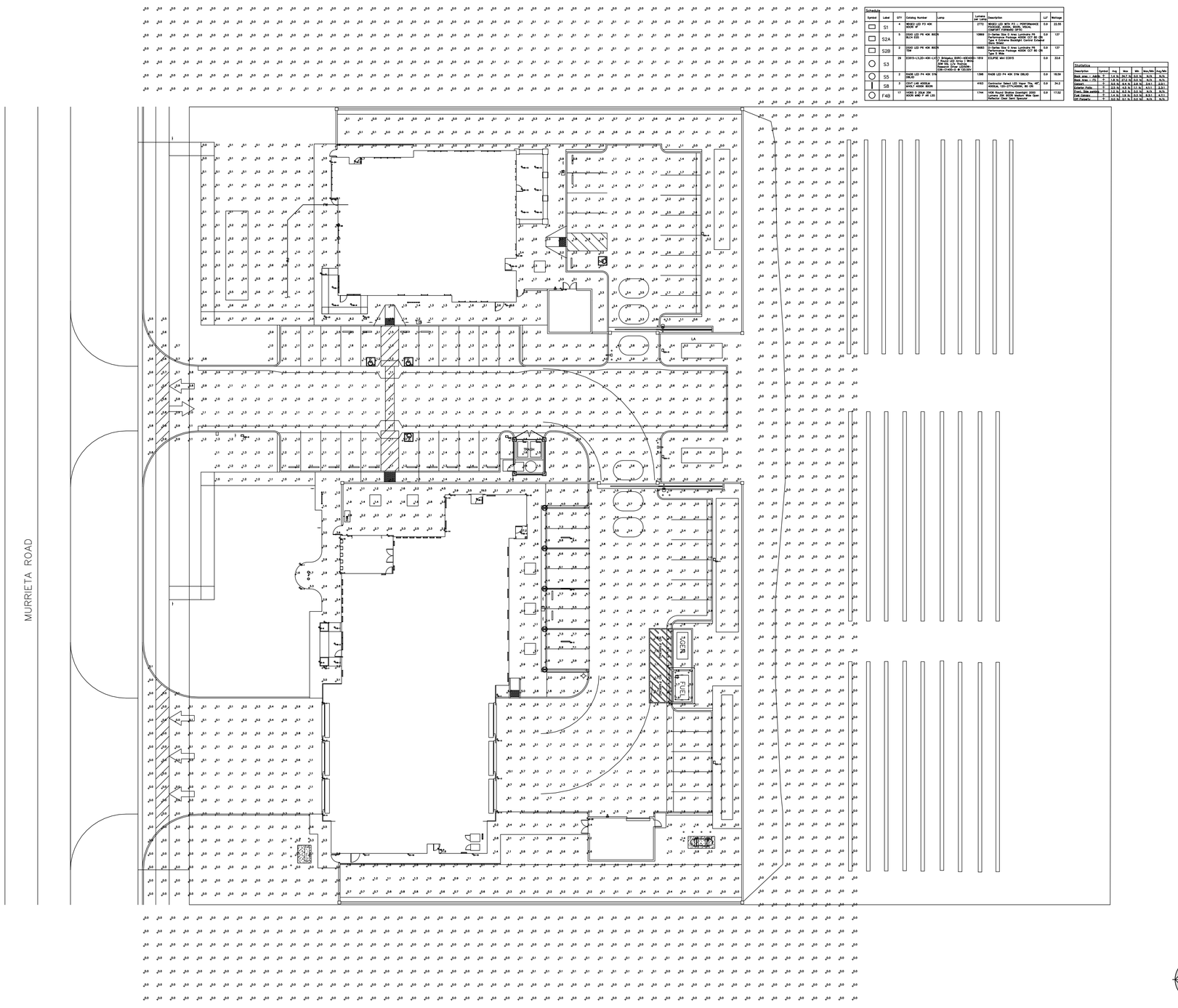

Schedule								
Symbol	Label	QTY	Catalog Number	Lamp	Lamp Lumens	Description	LLF	Wattage
	S1	4	WDGE1 LED P3 40K WDGE1		5172	WDGE1 LED WITH P3 1 - PERFORMANCE PACKAGE, 4000K, 80CRI, VOLTAGE, MOUNTING PER PLAN	0.9	33.09
	S2A	5	DSXO LED P6 40K BKON BLCK EGG		10660	Square Outdoor Area Luminaire P6 Performance Package 4000K CCT 80 CRI Type 4 Medium Backlight Control Knuckle Mount Bronze	0.9	137
	S2B	2	DSXO LED P6 40K BKON DM		16683	Square Outdoor Area Luminaire P6 Performance Package 4000K CCT 80 CRI Type 4 Wide	0.9	137
	S3	29	EDR1-L30-40K-UE1	Bridgeley EDRC-ROUND- 1810 LED-30L-40K-UE1 White 20W RSL Fully Recessed Downlight, 2700K, 90CRI, 120VAC ■ 120-277VAC ■		ECLIPSE eDel EDR1S	0.9	33.6
	S5	1	RADB LED P4 40K STK DBLXD		1398	RADB LED P4 40K STK DBLXD	0.9	18.59
	S8	2	DSX1 LA 400MLP 40K T5W HS SPA RPA VOLT KDDX BCP		4163	Contractor Select LED Area/ Site, 40K Performance Package, T5W, HS, SPA, RPA, VOLT, KDDX, BCP	0.9	34.2
	F4B	17	HOBO 2' STK P1 40K WDXN GWD P ATT LED		1749	1YR Period Warranty Downlight, 2000 Lumens, 4000K, 90 CRI, Wide Distribution Reflector Clear Semi Specular	0.9	17.82

Statistics						
Description	Symbol	Avg	Max	Min	Max/Min	Avg/Min
Boot area	+	4.6 fc	20.2 fc	0.0 fc	N/A	N/A
Bus area	+	4.6 fc	20.2 fc	0.0 fc	N/A	N/A
CANVAS	+	4.6 fc	6.6 fc	2.8 fc	2.4:1	1.6:1
Estate Patio	+	4.6 fc	6.6 fc	2.8 fc	2.4:1	1.6:1
Park_Site entry	+	4.6 fc	6.6 fc	2.8 fc	2.4:1	1.6:1
Site entry	+	4.6 fc	6.6 fc	2.8 fc	2.4:1	1.6:1
Off-Property	+	4.6 fc	51.9 fc	0.0 fc	N/A	N/A

ELECTIRCAL SITE PHOTOMETRY PLAN | SCALE: 1"=20'-0" | 1

STK ARCHITECTS, INC.
42095 ZEVO DR., TEMECULA, CALIFORNIA 92590-3780
Phone: 951.296.9110 Fax: 951.296.6079 Email: stk@stkinc.com

CONSULTANT:

REVIEWED FOR CODE COMPLIANCE

THESE DRAWINGS AND DOCUMENTS HAVE BEEN REVIEWED AND FOUND TO BE IN SUBSTANTIAL COMPLIANCE WITH THE 2022 CALIFORNIA BUILDING CODE. ADDITIONAL CORRECTIONS MAY BE REQUIRED DURING CONSTRUCTION. THE BUILDING OFFICIAL MAY REQUIRE ADDITIONAL TESTS, INSPECTIONS OR DOCUMENTATION. THIS REVIEW DOES NOT AUTHORIZE VIOLATION OF ANY CODE REGULATION. CONTRACTOR SHALL VERIFY ALL CONDITIONS AND DIMENSIONS. CONTRACTOR TO BE RESPONSIBLE FOR ALL CONSTRUCTION METHODS, TECHNIQUES, SEQUENCES AND PROCEDURES. CONTRACTOR SHALL COMPLY WITH ALL APPLICABLE LAWS, CODES, AND REGULATIONS IN CONNECTION WITH CONSTRUCTION. CONTRACTOR SHALL BE RESPONSIBLE FOR JOB SITE SAFETY. REVIEW OF THIS PLAN DOES NOT INCLUDE REVIEW OF THE ADEQUACY OF ANY SUCH ITEMS.

BUILDING DEPARTMENT APPROVAL BY:
Date: 02/26/2026

DESIGN WEST ENGINEERING
MECHANICAL / ELECTRICAL / ENERGY CONSULTANTS
FIRE PROTECTION ENGINEERING
DEPARTMENT
SOLUTIONS INC.

REGISTERED PROFESSIONAL ENGINEER
DAVID K. KYLE
22839
SIGNED 04/24/2026
ELECTRICAL
STATE OF CALIFORNIA

PROJECT ADMINISTERED BY:
CITY OF PERRIS

101 NORTH "D" STREET
PERRIS, CA 92570

PROJECT NAME:
SOUTH FIRE STATION AND ADMINISTRATIVE BUILDING

PROJECT CIP: F077

2495 MURRIETA ROAD
PERRIS, CA 92585

ISSUE INFORMATION:

DATE:	INFORMATION:
11-26-25	95% CD SUBMITTAL
02-05-26	1st PC RESPONSE
02-19-26	2nd PC RESPONSE

SHEET INFORMATION:

STK PROJECT NO.: 365-03-25
SCALE: AS NOTED
DATE: NOVEMBER 2025
PLOT DATE: -
DRAWN BY: JM / JM

SEAL:

SHEET TITLE:
ELECTRICAL SITE PHOTOMETRY PLAN

SHEET NO.:
E1.1

25-114

04/24/2026 12:42PM
RL: PROJECTS\2025\25-114 perris fire station\ CAD\25-114 E-Site.dwg

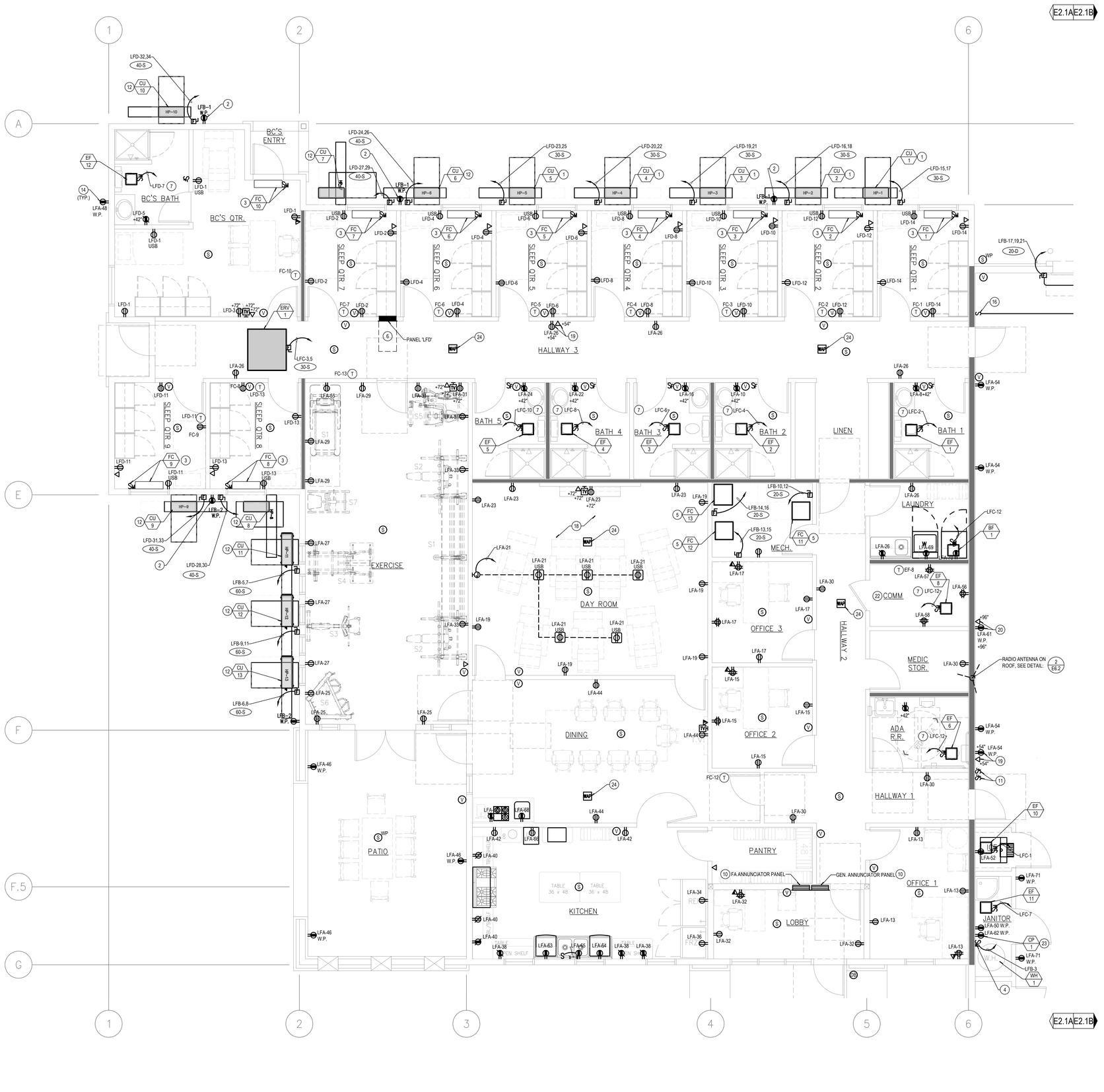

GENERAL NOTES

1. COORDINATE POWER AND DATA DEVICE LOCATIONS, AND DEVICE PLATE COLOR WITH ARCHITECT.
2. NO PIPING, DUCTS OR EQUIPMENT FOREIGN TO ELECTRICAL EQUIPMENT SHALL BE PERMITTED TO BE LOCATED WITHIN A SPACE EXTENDING FROM FLOOR TO A HEIGHT OF 6' ABOVE THE EQUIPMENT. CEC 110.26(E)1.
3. ALL EXTERIOR ELECTRICAL EQUIPMENT SHALL BE NEMA 3R.
4. ALL CONDUITS SHALL BE INSTALLED IN THE CEILING BELOW U.O.N.
5. REFER TO MECHANICAL AND PLUMBING PLANS FOR THE EXACT LOCATION OF HVAC EQUIPMENT AND ADDITIONAL WIRING REQUIREMENTS.
6. PROVIDE DUCT DETECTORS/S.F.D. POWER AND CONNECTIONS AS INDICATED ON MECHANICAL DRAWINGS.
7. PROVIDE FLEXIBLE SEAL TYPE CONDUIT FOR CONNECTION TO ALL HVAC EQUIPMENT.
8. MOUNT ALL DISCONNECT SWITCHES INDEPENDENT OF THE HVAC UNIT SEE
9. ALL EXTERIOR RECEPTACLE OUTLETS SHALL BE GFCI TYPE.
10. PROVIDE HEAVY DUTY DISCONNECT SWITCHES WITH DUAL ELEMENT FUSES TO MATCH MOTOR H.P. RATING.

CONSTRUCTION NOTES

1. PROVIDE AND INSTALL 30A 2P H.D. WEATHERPROOF NEMA 3R RATED FUSED DISCONNECT. FUSING PER MECHANICAL EQUIPMENT MANUFACTURERS REQUIREMENTS. VERIFY EXACT LOCATION AND REQUIREMENTS WITH MECHANICAL CONTRACTOR.
2. PROVIDE WEATHER PROOF GFCI WORK OUTLET AS REQUIRED WITHIN 25'-0" OF MECHANICAL EQUIPMENT.
3. FAN COIL TO BE POWERED BY EXTERIOR CONDENSING UNIT. REFER TO MECHANICAL PLANS TO ACHIEVE INTERLOCK CONTROL AS INDICATED ON MECHANICAL EQUIPMENT SCHEDULE. PROVIDE (2) CONDUITS, MIN 3/4", ROUTED BETWEEN UNITS FOR POWER AND CONTROL OF INTERIOR UNIT. COORDINATE INSTALLATION WITH MECHANICAL CONTRACTOR INCLUDING CONDUIT SIZE(S). ROUTE THROUGH MOTOR RATED SNAP SWITCH AS SHOWN. PROVIDE 3/4" CONDUIT BETWEEN UNITS FOR CONTROLS.
4. PROVIDE AND INSTALL MOTOR RATED SNAP SWITCH.
5. PROVIDE AND INSTALL 30A 2P H.D. NEMA 1 RATED FUSED DISCONNECT. FUSING PER MECHANICAL EQUIPMENT MANUFACTURERS REQUIREMENTS. VERIFY EXACT LOCATION AND REQUIREMENTS WITH MECHANICAL CONTRACTOR. PROVIDE 3/4" CONDUIT BETWEEN UNITS FOR CONTROLS.
6. PROVIDE MINIMUM 3'-0" LEVEL CLEARANCE IN FRONT OF ELECTRICAL EQUIPMENT, PER NEC 110.26.
7. ROUTE EXHAUST FAN THROUGH INDEPENDENT KEYED SWITCH ADJACENT TO LIGHT SWITCH.
8. PROVIDE AND INSTALL 100A 3P H.D. WEATHERPROOF NEMA 3R RATED FUSED DISCONNECT. FUSING PER EQUIPMENT MANUFACTURERS REQUIREMENTS. VERIFY EXACT REQUIREMENTS WITH MANUFACTURER/VENDOR PRIOR TO CONSTRUCTION START.
9. PROVIDE AND INSTALL 60A 3P H.D. WEATHERPROOF NEMA 3R RATED FUSED DISCONNECT. FUSING PER EQUIPMENT MANUFACTURERS REQUIREMENTS. VERIFY EXACT REQUIREMENTS WITH MANUFACTURER/VENDOR PRIOR TO CONSTRUCTION START.
10. PROVIDE RECESSED PANEL IN WALL. VERIFY AND COORDINATE WITH ARCHITECT 6" WALL HAS BEEN PROVIDED.
11. ROUTE FAN CIRCUIT THROUGH SWITCH ON WALL.
12. PROVIDE AND INSTALL 60A 2P H.D. WEATHERPROOF NEMA 3R RATED FUSED DISCONNECT. FUSING PER EQUIPMENT MANUFACTURERS REQUIREMENTS. VERIFY EXACT LOCATION AND REQUIREMENTS WITH MECHANICAL CONTRACTOR.
13. PROVIDE AND INSTALL 30A 3P H.D. WEATHERPROOF NEMA 3R RATED FUSED DISCONNECT. FUSING PER EQUIPMENT MANUFACTURERS REQUIREMENTS. VERIFY EXACT REQUIREMENTS WITH MANUFACTURER/VENDOR PRIOR TO CONSTRUCTION START.
14. EXTERIOR RECEPTACLES TO BE INSTALLED IN A LOCKABLE RECESSED WEATHERPROOF ENCLOSURE.
15. PROVIDE POWER & CONTROL CONNECTION TO ROLL-UP DOOR MOTOR. VERIFY ALL INSTALLATION DETAILS WITH VENDOR PRIOR TO ROUGH-IN.
16. PROVIDE COMPATIBLE PUSH-BUTTON GARAGE BAY DOOR CONTROLS. PROVIDE ALL NECESSARY COMPONENTS FOR A COMPLETE INSTALLATION. MOUNT AT 42" AFF AND COORDINATE PLACEMENT WITH ARCHITECTURAL.
17. PROVIDE 3/4" CONDUIT MINIMUM FOR GARAGE BAY DOOR CONTROL WIRING. VERIFY ALL INSTALLATION DETAILS WITH VENDOR PRIOR TO ROUGH-IN.
18. PROVIDE ASSISTIVE LISTENING SYSTEM, SEE DETAIL: 15 E6.1
19. DUPLEX AND DATE OUTLET FOR RECESSED PHONE WITH PAGING CAPABILITY. VERIFY PHONE TYPE AND ALL INSTALLATION DETAILS WITH RIVERSIDE COUNTY FIRE PRIOR TO CONSTRUCTION START.
20. DATA OUTLET AND RECEPTACLE FOR WAP. PROVIDE 3/4" CONDUIT WITH PULLSTRING TO COMM ROOM. RIVERSIDE COUNTY FIR TO PROVIDE WAP AND CABLE.
21. PROVIDE 3" C.O. WITH PULLSTRING FROM TELEPHONE BACKBOARD TO COMM ROOM.
22. SEE DETAIL - 3 E6.2 FOR TYPICAL RIVERSIDE COUNTY COMM ROOM LAYOUT.
23. COORDINATE RECEPTACLE MOUNTING HEIGHT WITH PLUMBING CONTRACTOR PRIOR TO ROUGH-IN.
24. PROVIDE CEILING MOUNTED WIRELESS ACCESS POINT (WAP). PROVIDE 3/4" C.O. TO COMM ROOM. COORDINATE WITH CITY FOR LOW-VOLTAGE WIRING REQUIREMENTS.
25. PROVIDE POWER FOR ILLUMINATED BUILDING ADDRESS. FIELD VERIFY EXACT LOCATIONS PRIOR TO ANY WORK.
26. ROUTE CIRCUIT VIA LIGHTING CONTROL PANEL.

POWER & SIGNAL PLAN - SEGMENT A | SCALE: 1/4" = 1'-0" | 1

STK ARCHITECTS, INC.
42095 ZEVO DR., TEMECULA, CALIFORNIA 92590-3780
Phone: 951.296.9110 Fax: 951.296.6079 Email: stk@stkinc.com

CONSULTANT:

REVIEWED FOR CODE COMPLIANCE

THESE PLANS AND DOCUMENTS SHALL BE DESIGNED AND FOUND TO BE IN COMPLIANCE WITH TITLE 24 CALIFORNIA CODE OF REGULATIONS AS SUBJECT TO FIELD INSPECTION. THE "APPROVED" OR "REVIEWED FOR CODE COMPLIANCE" STAMP DOES NOT RELIEVE THE CONTRACTOR OF THE RESPONSIBILITY FOR COMPLIANCE WITH THE CODE. THE CONTRACTOR SHALL VERIFY ALL DIMENSIONS AND CONDITIONS AT THE JOB SITE AND SHALL BE RESPONSIBLE FOR THE SAME. DESIGN WEST ENGINEERING INC. ASSUMES NO RESPONSIBILITY FOR CONSTRUCTION MEANS, METHODS, TECHNIQUES, SEQUENCES OR PROCEDURES.

DESIGN WEST ENGINEERING
MECHANICAL / ELECTRICAL / ENERGY CONSULTANTS
FUTURE BUILT SOLUTIONS INC.

REGISTERED PROFESSIONAL ENGINEER
KEVIN KOVACS
22839
SIGNED: 04/24/2026
ELECTRICAL
STATE OF CALIFORNIA

PROJECT ADMINISTERED BY:
CITY OF PERRIS

101 NORTH "D" STREET
PERRIS, CA 92570

PROJECT NAME:
SOUTH FIRE STATION AND ADMINISTRATIVE BUILDING

PROJECT CIP: F077

2495 MURRIETA ROAD
PERRIS, CA 92585

ISSUE INFORMATION:

DATE:	INFORMATION:
11-26-25	95% CD SUBMITTAL
02-05-26	1st PC RESPONSE
02-19-26	2nd PC RESPONSE

SHEET INFORMATION:

STK PROJECT NO.: 365-03-25
SCALE: AS NOTED
DATE: NOVEMBER 2025
PLOT DATE: –
DRAWN BY: JM / JM

SEAL:

SHEET TITLE:
POWER & SIGNAL PLAN SEG A

SHEET NO.:
E2.1A

25-114

3/24/2026 12:42PM R:_PROJECTS\2025\25-114 perris fire station_CAD\25-114 E-PwrPln.dwg

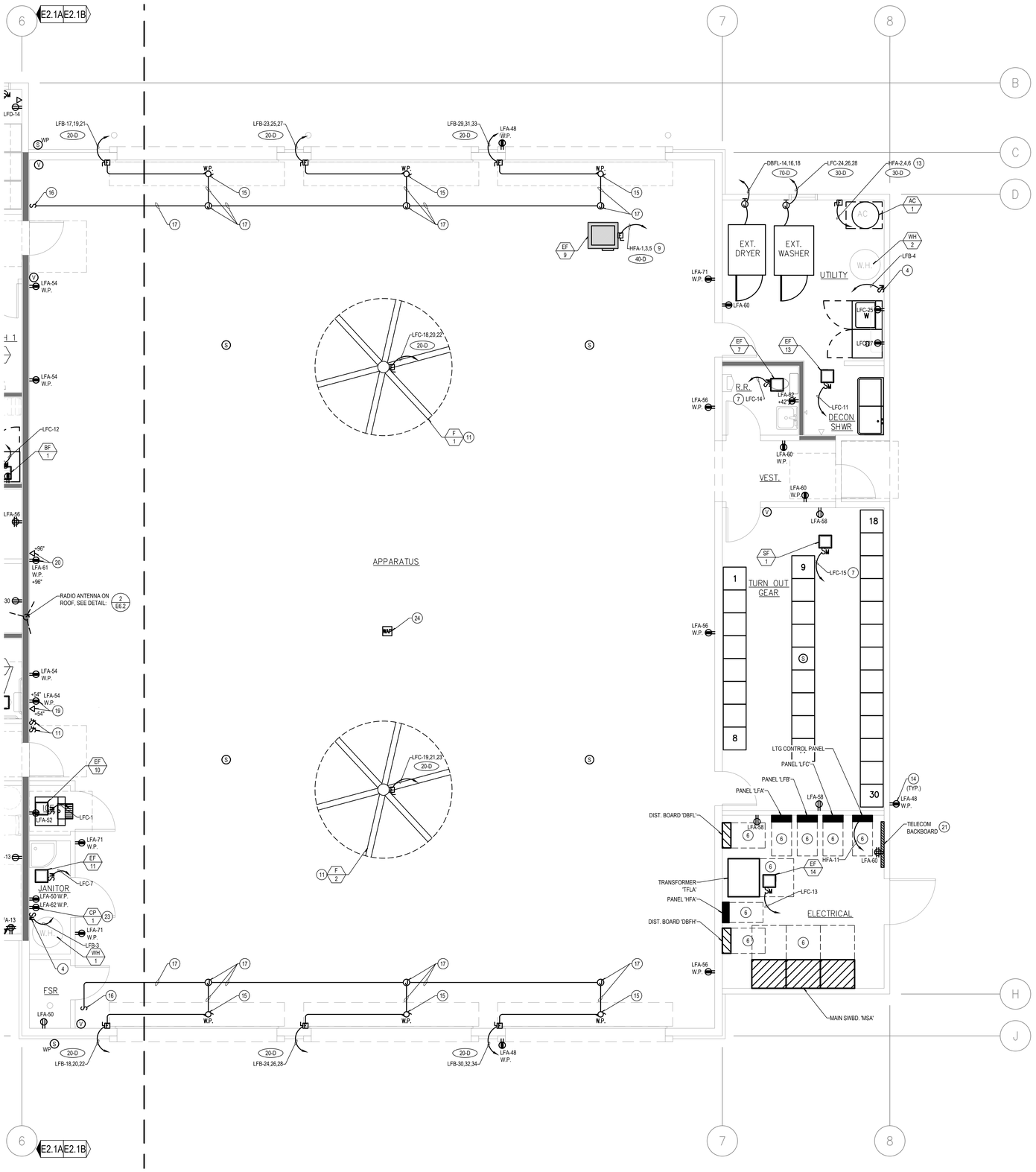

GENERAL NOTES

1. COORDINATE POWER AND DATA DEVICE LOCATIONS, AND DEVICE PLATE COLOR WITH ARCHITECT.
2. NO PIPING, DUCTS OR EQUIPMENT FOREIGN TO ELECTRICAL EQUIPMENT SHALL BE PERMITTED TO BE LOCATED WITHIN A SPACE EXTENDING FROM FLOOR TO A HEIGHT OF 6' ABOVE THE EQUIPMENT. CEC 110.26(E)1.
3. ALL EXTERIOR ELECTRICAL EQUIPMENT SHALL BE NEMA 3R.
4. ALL CONDUITS SHALL BE INSTALLED IN THE CEILING BELOW U.O.N.
5. REFER TO MECHANICAL AND PLUMBING PLANS FOR THE EXACT LOCATION OF HVAC EQUIPMENT AND ADDITIONAL WIRING REQUIREMENTS.
6. PROVIDE DUCT DETECTORS/S.F.D. POWER AND CONNECTIONS AS INDICATED ON MECHANICAL DRAWINGS.
7. PROVIDE FLEXIBLE SEAL TYPE CONDUIT FOR CONNECTION TO ALL HVAC EQUIPMENT.
8. MOUNT ALL DISCONNECT SWITCHES INDEPENDENT OF THE HVAC UNIT SEE
9. ALL EXTERIOR RECEPTACLE OUTLETS SHALL BE GFCI TYPE.
10. PROVIDE HEAVY DUTY DISCONNECT SWITCHES WITH DUAL ELEMENT FUSES TO MATCH MOTOR H.P. RATING.

CONSTRUCTION NOTES

1. PROVIDE AND INSTALL 30A 2P H.D. WEATHERPROOF NEMA 3R RATED FUSED DISCONNECT. FUSING PER MECHANICAL EQUIPMENT MANUFACTURERS REQUIREMENTS. VERIFY EXACT LOCATION AND REQUIREMENTS WITH MECHANICAL CONTRACTOR.
2. PROVIDE WEATHER PROOF GFCI WORK OUTLET AS REQUIRED WITHIN 25'-0" OF MECHANICAL EQUIPMENT.
3. FAN COIL TO BE POWERED BY EXTERIOR CONDENSING UNIT. REFER TO MECHANICAL PLANS TO ACHIEVE INTERLOCK CONTROL AS INDICATED ON MECHANICAL EQUIPMENT SCHEDULE. PROVIDE (2) CONDUITS, MIN 3/4", ROUTED BETWEEN UNITS FOR POWER AND CONTROL OF INTERIOR UNIT. COORDINATE INSTALLATION WITH MECHANICAL CONTRACTOR INCLUDING CONDUIT SIZE(S). ROUTE THROUGH MOTOR RATED SNAP SWITCH AS SHOWN. PROVIDE 3/4" CONDUIT BETWEEN UNITS FOR CONTROLS.
4. PROVIDE AND INSTALL MOTOR RATED SNAP SWITCH.
5. PROVIDE AND INSTALL 30A 2P H.D. NEMA 1 RATED FUSED DISCONNECT. FUSING PER MECHANICAL EQUIPMENT MANUFACTURERS REQUIREMENTS. VERIFY EXACT LOCATION AND REQUIREMENTS WITH MECHANICAL CONTRACTOR. PROVIDE 3/4" CONDUIT BETWEEN UNITS FOR CONTROLS.
6. PROVIDE MINIMUM 3'-0" LEVEL CLEARANCE IN FRONT OF ELECTRICAL EQUIPMENT, PER NEC 110.26.
7. ROUTE EXHAUST FAN THROUGH INDEPENDENT KEYED SWITCH ADJACENT TO LIGHT SWITCH.
8. PROVIDE AND INSTALL 100A 3P H.D. WEATHERPROOF NEMA 3R RATED FUSED DISCONNECT. FUSING PER EQUIPMENT MANUFACTURERS REQUIREMENTS. VERIFY EXACT REQUIREMENTS WITH MANUFACTURER/VENDOR PRIOR TO CONSTRUCTION START.
9. PROVIDE AND INSTALL 60A 3P H.D. WEATHERPROOF NEMA 3R RATED FUSED DISCONNECT. FUSING PER EQUIPMENT MANUFACTURERS REQUIREMENTS. VERIFY EXACT REQUIREMENTS WITH MANUFACTURER/VENDOR PRIOR TO CONSTRUCTION START.
10. PROVIDE RECESSED PANEL IN WALL. VERIFY AND COORDINATE WITH ARCHITECT 6" WALL HAS BEEN PROVIDED.
11. ROUTE FAN CIRCUIT THROUGH SWITCH ON WALL.
12. PROVIDE AND INSTALL 60A 2P H.D. WEATHERPROOF NEMA 3R RATED FUSED DISCONNECT. FUSING PER MECHANICAL EQUIPMENT MANUFACTURERS REQUIREMENTS. VERIFY EXACT LOCATION AND REQUIREMENTS WITH MECHANICAL CONTRACTOR.
13. PROVIDE AND INSTALL 30A 3P H.D. WEATHERPROOF NEMA 3R RATED FUSED DISCONNECT. FUSING PER EQUIPMENT MANUFACTURERS REQUIREMENTS. VERIFY EXACT REQUIREMENTS WITH MANUFACTURER/VENDOR PRIOR TO CONSTRUCTION START.
14. EXTERIOR RECEPTACLES TO BE INSTALLED IN A LOCKABLE RECESSED WEATHERPROOF ENCLOSURE.
15. PROVIDE POWER & CONTROL CONNECTION TO ROLL-UP DOOR MOTOR. VERIFY ALL INSTALLATION DETAILS WITH VENDOR PRIOR TO ROUGH-IN.
16. PROVIDE COMPATIBLE PUSH-BUTTON GARAGE BAY DOOR CONTROLS. PROVIDE ALL NECESSARY COMPONENTS FOR A COMPLETE INSTALLATION. MOUNT AT 42" AFF AND COORDINATE PLACEMENT WITH ARCHITECTURAL.
17. PROVIDE 3/4" CONDUIT MINIMUM FOR GARAGE BAY DOOR CONTROL WIRING. VERIFY ALL INSTALLATION DETAILS WITH VENDOR PRIOR TO ROUGH-IN.
18. PROVIDE ASSISTIVE LISTENING SYSTEM, SEE DETAIL: 15 E6.1
19. DUPLEX AND DATE OUTLET FOR RECESSED PHONE WITH PAGING CAPABILITY. VERIFY PHONE TYPE AND ALL INSTALLATION DETAILS WITH RIVERSIDE COUNTY FIRE PRIOR TO CONSTRUCTION START.
20. DATA OUTLET AND RECEPTACLE FOR WAP. PROVIDE 3/4" CONDUIT WITH PULLSTRING TO COMM ROOM. RIVERSIDE COUNTY FIR TO PROVIDE WAP AND CABLE.
21. PROVIDE 3" C.O. WITH PULLSTRING FROM TELEPHONE BACKBOARD TO COMM ROOM.
22. SEE DETAIL: 3 E6.2 FOR TYPICAL RIVERSIDE COUNTY COMM ROOM LAYOUT.
23. COORDINATE RECEPTACLE MOUNTING HEIGHT WITH PLUMBING CONTRACTOR PRIOR TO ROUGH-IN.
24. PROVIDE CEILING MOUNTED WIRELESS ACCESS POINT (WAP). PROVIDE 3/4" C.O. TO COMM ROOM. COORDINATE WITH CITY FOR LOW-VOLTAGE WIRING REQUIREMENTS.
25. PROVIDE POWER FOR ILLUMINATED BUILDING ADDRESS. FIELD VERIFY EXACT LOCATIONS PRIOR TO ANY WORK.
26. ROUTE CIRCUIT VIA LIGHTING CONTROL PANEL.

POWER & SIGNAL PLAN - SEGMENT B | SCALE: 1/4" = 1'-0" | 1

STK ARCHITECTS, INC.
42095 ZEVO DR., TEMECULA, CALIFORNIA 92590-3780
Phone: 951.296.9110 Fax: 951.296.6079 Email: stk@stkinc.com

CONSULTANT:

REVIEWED FOR CODE COMPLIANCE
THESE PLANS AND DOCUMENTS HAVE BEEN REVIEWED AND FOUND TO BE IN COMPLIANCE WITH THE 2022 CALIFORNIA BUILDING CODES. THIS REVIEW IS SUBJECT TO ALL CONDITIONS AND LIMITATIONS NOTED IN THE PLANS AND THE BUILDING PERMIT. THE CONTRACTOR SHALL KEEP A COPY OF THESE PLANS ON THE JOB SITE AT ALL TIMES. CONTRACTOR IS RESPONSIBLE FOR CONSTRUCTION TO COMPLY WITH ALL APPLICABLE CODES AND REGULATIONS. THE CITY OF PERRIS DOES NOT ASSUME RESPONSIBILITY FOR ANY CONDITIONS ON THE JOB SITE. APPROVAL DOES NOT AUTHORIZE VIOLATION OF ANY CODE OR REGULATION.
BUILDING & SAFETY DEPARTMENT
CITY OF PERRIS
DESIGN WEST ENGINEERING
MECHANICAL / ELECTRICAL / ENERGY CONSULTANTS
DEPARTMENT
EUREKA ENERGY SOLUTIONS INC.

REGISTERED PROFESSIONAL ENGINEER
DAVID K. KOO
22839
SIGNED: 04/24/2026
ELECTRICAL
STATE OF CALIFORNIA

PROJECT ADMINISTERED BY:
CITY OF PERRIS

101 NORTH "D" STREET
PERRIS, CA 92570

PROJECT NAME:
SOUTH FIRE STATION AND ADMINISTRATIVE BUILDING

PROJECT CIP: F077

2495 MURRIETA ROAD
PERRIS, CA 92585

ISSUE INFORMATION:

DATE:	INFORMATION:
11-26-25	95% CD SUBMITTAL
02-05-26	1st PC RESPONSE
02-19-26	2nd PC RESPONSE

SHEET INFORMATION:

STK PROJECT NO.: 365-03-25
SCALE: AS NOTED
DATE: NOVEMBER 2025
PLOT DATE: –
DRAWN BY: JM / JM

SEAL:

SHEET TITLE:
POWER & SIGNAL PLAN SEG B

SHEET NO.:
E2.1B

IN: [PROJECT]\2025\25-114 perris fire station_CAD\25-114 E-Perris.dwg
04/23/2026 12:42PM

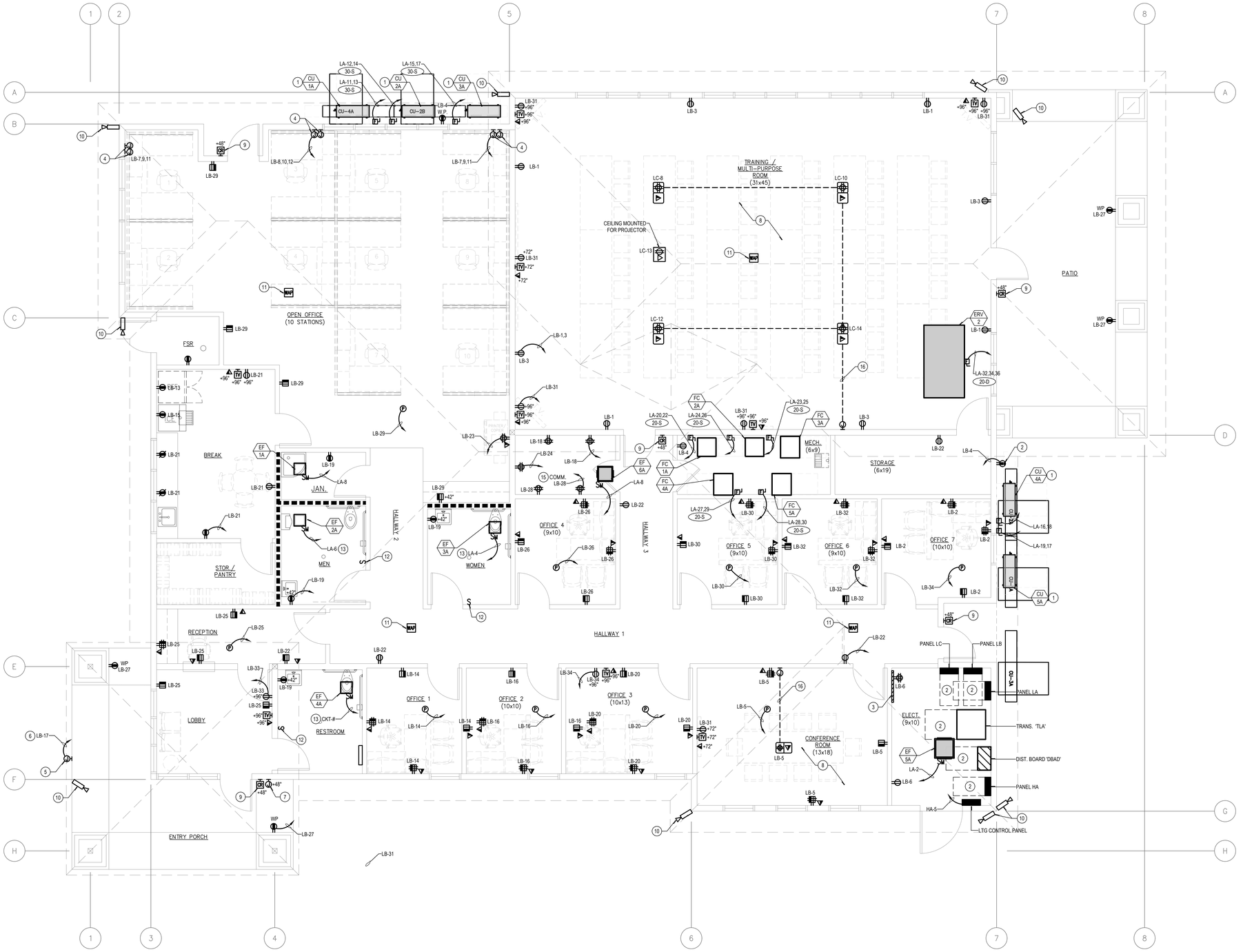

GENERAL NOTES

1. COORDINATE POWER AND DATA DEVICE LOCATIONS, AND DEVICE PLATE COLOR WITH ARCHITECT.
2. NO PIPING, DUCTS OR EQUIPMENT FOREIGN TO ELECTRICAL EQUIPMENT SHALL BE PERMITTED TO BE LOCATED WITHIN A SPACE EXTENDING FROM FLOOR TO A HEIGHT OF 6' ABOVE THE EQUIPMENT. CEC 110.26(E)1.
3. ALL EXTERIOR ELECTRICAL EQUIPMENT SHALL BE NEMA 3R.
4. ALL CONDUITS SHALL BE INSTALLED IN THE CEILING BELOW U.O.N.
5. REFER TO MECHANICAL AND PLUMBING PLANS FOR THE EXACT LOCATION OF HVAC EQUIPMENT AND ADDITIONAL WIRING REQUIREMENTS.
6. PROVIDE DUCT DETECTOR/S.F.D. POWER AND CONNECTIONS AS INDICATED ON MECHANICAL DRAWINGS.
7. PROVIDE FLEXIBLE SEAL TYPE CONDUIT FOR CONNECTION TO ALL HVAC EQUIPMENT.
8. MOUNT ALL DISCONNECT SWITCHES INDEPENDENT OF THE HVAC UNIT SEE
9. ALL EXTERIOR RECEPTACLE OUTLETS SHALL BE GFCI TYPE.
10. PROVIDE HEAVY DUTY DISCONNECT SWITCHES WITH DUAL ELEMENT FUSES TO MATCH MOTOR H.P. RATING.

CONSTRUCTION NOTES

1. PROVIDE AND INSTALL 30A 2P H.D. WEATHERPROOF NEMA 3R RATED FUSED DISCONNECT. FUSING PER MECHANICAL EQUIPMENT MANUFACTURERS REQUIREMENTS. VERIFY EXACT LOCATION AND REQUIREMENTS WITH MECHANICAL CONTRACTOR.
2. PROVIDE MINIMUM 3'-0" LEVEL CLEARANCE IN FRONT OF ELECTRICAL EQUIPMENT, PER NEC 110.26.
3. PROVIDE 4'x8'x3/4" FIRE RESISTANT PLYWOOD TELEPHONE BACKBOARD. PROVIDE AND INSTALL TELECOMMUNICATIONS GROUND BAR WITH #6 COPPER BONDING CONDUCTOR FROM BUILDING GROUNDING ELECTRODE SYSTEM TO GROUND BAR. PLYWOOD SHALL BE PRESSURE TREATED AND PAINTED WITH NON-CONDUCTIVE GRAY PAINT.
4. PROVIDE SYSTEMS FURNITURE POWER AND DATA JUNCTION BOXES AND WHIPS (PIGTAILS) PER FURNITURE MANUFACTURER. VERIFY LOCATIONS WITH FURNITURE DRAWINGS AND INSTALLER PRIOR TO ROUGH-IN. PROVIDE 1-1/4"C.O. 6" ABOVE CEILING SPACE FOR DATA.
5. PROVIDE POWER FOR ILLUMINATED BUILDING ADDRESS. FIELD VERIFY EXACT LOCATIONS PRIOR TO ANY WORK.
6. ROUTE CIRCUIT VIA LIGHTING CONTROL PANEL.
7. PROVIDE 3/4" TO DOOR CHIME FOR DOOR BELL PUSHBUTTON. FIELD VERIFY EXACT CHIME LOCATION PRIOR TO ANY WORK.
8. PROVIDE ASSISTIVE LISTENING SYSTEM, SEE DETAIL: 15/E6.1
9. PROVIDE 4S OUTLET BOX AND STUB 3/4" C.O. TO COMM ROOM FOR CARD READER. PROVIDE BUSHING AND PULL WIRE. COORDINATE WITH CITY FOR LOW-VOLTAGE WIRING REQUIREMENTS.
10. PROVIDE 4S OUTLET BOX AND STUB 1" C.O. 6" TO ELECTRICAL ROOM FOR CAMERA. PROVIDE BUSHING AND PULL WIRE. COORDINATE WITH CITY FOR LOW-VOLTAGE WIRING REQUIREMENTS.
11. PROVIDE CEILING MOUNTED WIRELESS ACCESS POINT (WAP). PROVIDE 3/4" C.O. TO COMM ROOM. COORDINATE WITH CITY FOR LOW-VOLTAGE WIRING REQUIREMENTS.
12. PROVIDE 30MIN. 120V IN-WALL COUNTDOWN TIMER SWITCH AND LOCATE ADJACENT TO LIGHTING SWITCH INTERMATIC MODEL# FD430MW. CONTRACTOR TO LABEL WITH "CONTROLS FAN."
13. ROUTE FAN CIRCUIT THROUGH COUNTDOWN TIMER SWITCH LOCATED IN ROOM FOR AUTOMATIC CONTROLS.
14. EXTERIOR RECEPTACLES TO BE INSTALLED IN A LOCKABLE RECESSED WEATHERPROOF ENCLOSURE.
15. SEE DETAIL: 3/E6.2 FOR TYPICAL RIVERSIDE COUNTY COMM ROOM LAYOUT.
16. ROUTE UNDERGROUND TO JUNCTION BOX IN WALL, 1 1/4" FOR DATA AND 1" FOR POWER (PER DEVICE).

POWER & SIGNAL PLAN - ADMIN BUILDING | SCALE: 1/4" = 1'-0" | 1

STK ARCHITECTS, INC.
42095 ZEVO DR., TEMECULA, CALIFORNIA 92590-3780
Phone: 951.296.9110 Fax: 951.296.6079 Email: stk@stkinc.com

CONSULTANT:

REVIEWED FOR CODE COMPLIANCE

THESE PLANS AND DOCUMENTS HAVE BEEN REVIEWED AND FOUND TO BE IN SUBSTANTIAL COMPLIANCE WITH THE 2022 CALIFORNIA BUILDING CODE. THIS APPROVAL DOES NOT AUTHORIZE VIOLATION OF ANY CODE OR REGULATION. THE BUILDING OFFICIAL AND HIS/HER SUPERVISORS MAKE NO REPRESENTATIONS OR WARRANTIES REGARDING THE ACCURACY OF THE PLANS AND DOCUMENTS. THE CONTRACTOR OF RECORD IS RESPONSIBLE FOR CONSTRUCTION IN CONFORMANCE WITH ALL APPLICABLE CODES AND REGULATIONS. THE CONTRACTOR OF RECORD IS RESPONSIBLE FOR JOB SITE SAFETY. CONSTRUCTION MUST CONFORM TO THE APPROVED PLANS AT ALL TIMES. ANY DEVIATIONS MUST BE APPROVED IN WRITING BY THE BUILDING OFFICIAL. Date: FOR 4/29/2026 By: Edward Wimberly

DESIGN WEST ENGINEERING
ARCHITECTURAL / STRUCTURAL CONSULTANTS
DEPARTMENT OF BUILDING & SAFETY
SOLUTIONS INC.

REGISTERED PROFESSIONAL ENGINEER
KEVIN K. KUO
22839
SIGNED 04/24/2026
ELECTRICAL
STATE OF CALIFORNIA

PROJECT ADMINISTERED BY:
CITY OF PERRIS

101 NORTH "D" STREET
PERRIS, CA 92570

PROJECT NAME:
SOUTH FIRE STATION AND ADMINISTRATIVE BUILDING

PROJECT CIP: F077

2495 MURRIETA ROAD
PERRIS, CA 92585

ISSUE INFORMATION:

DATE:	INFORMATION:
11–26–25	95% CD SUBMITTAL
02–05–26	1st PC RESPONSE
02–19–26	2nd PC RESPONSE

SHEET INFORMATION:

STK PROJECT NO.: 365–03–25
SCALE: AS NOTED
DATE: NOVEMBER 2025
PLOT DATE: –
DRAWN BY: JM / JM

SEAL:

SHEET TITLE:
POWER & SIGNAL PLAN - ADMIN BUILDING

SHEET NO.:
E2.2

THESE PLANS AND DOCUMENTS ARE THE PROPERTY OF STK ARCHITECTS, INC. AND ARE NOT TO BE USED IN ANY WAY WITHOUT THE EXPRESS WRITTEN PERMISSION OF STK ARCHITECTS, INC. ALL RIGHTS RESERVED. © COPYRIGHT STK ARCHITECTS, INC.

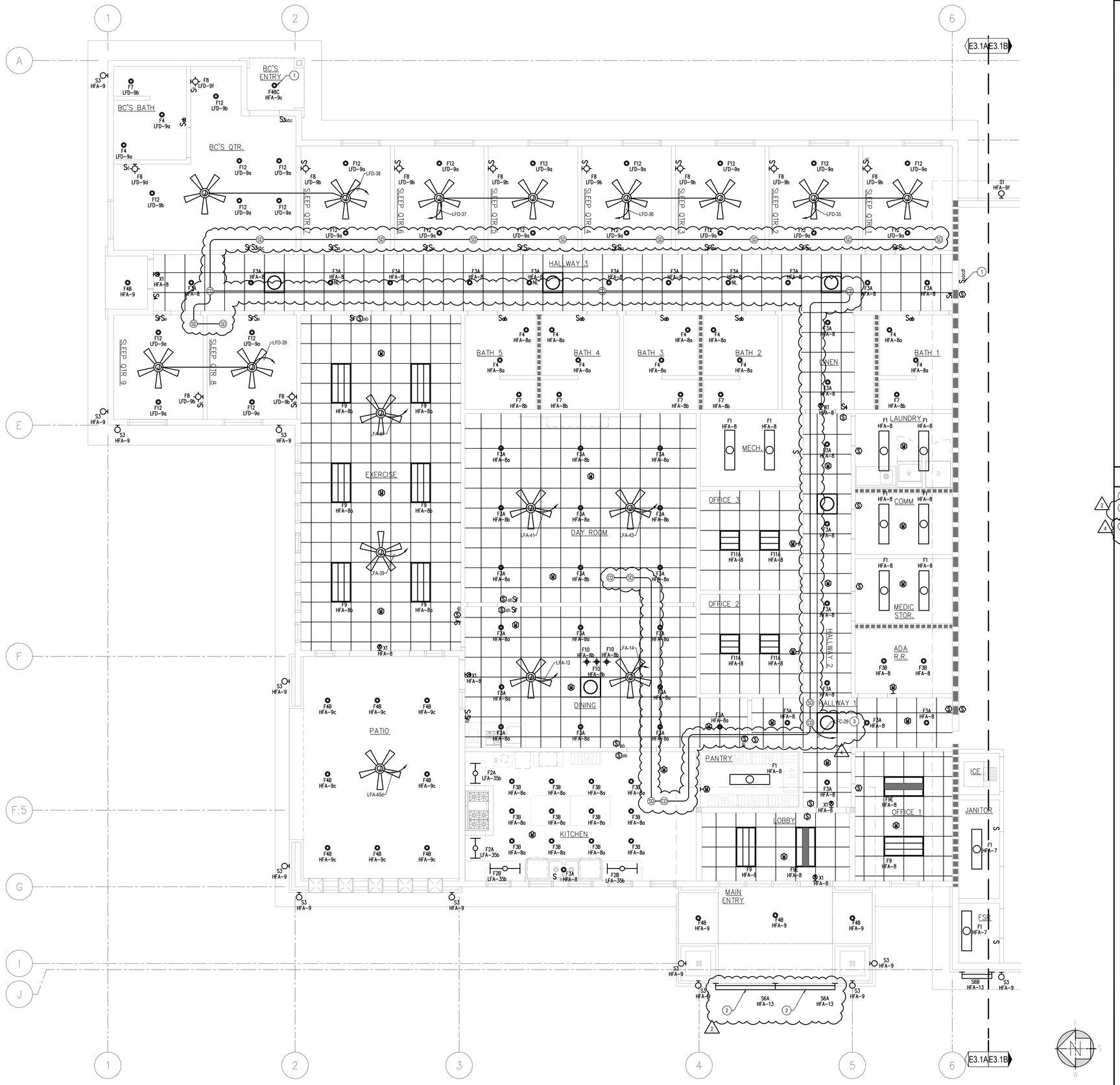

ELECTIRCAL LIGHTING PLAN - SEGMENT A | SCALE: 1/4" = 1'-0" | 1

GENERAL NOTES

1. COORDINATE LIGHT FIXTURE LOCATIONS AND LIGHT SWITCH LOCATIONS, COLOR, AND STYLE WITH ARCHITECT.
2. WHERE OCCUPANCY SENSORS ARE SHOWN ON PLANS, VERIFY WATTAGE AND COVERAGE OF PRODUCT PROVIDED IS ADEQUATE FOR SPACE TO BE CONTROLLED. COVERAGE IS TO BE ADJUSTED TO AVOID ACCIDENTAL ACTIVATION OUTSIDE OF AREA. VERIFY WIRING REQUIREMENTS TO ADDITIONAL SENSORS, ROOM CONTROLLERS, RELAY PACKS, ETC WITH PRODUCT BEING PROVIDED. OCCUPANCY SENSORS SHALL NOT BE LOCATED WITHIN FOUR FEET OF ANY HVAC DIFFUSER.
3. WHERE DAYLIGHT SENSORS ARE SHOWN ON PLANS, LOCATION SHOWN IS DIAGRAMMATICAL. VERIFY LOCATION IS PER MANUFACTURER RECOMMENDATIONS BASED ON TYPE OF SENSOR (OPEN/CLOSED LOOP). VERIFY WIRING REQUIREMENTS TO ADDITIONAL SENSORS, ROOM CONTROLLERS, RELAY PACKS, ETC WITH PRODUCT BEING PROVIDED.
4. PROVIDE NON-SWITCHED 'HOT' POWER WIRE TO BATTERY PACK CHARGING/SENSOR IN ALL EMERGENCY FIXTURES.
5. REFER TO LIGHTING CONTROL DETAILS FOR WIRING AND CONDUIT REQUIREMENTS. CONTRACTOR SHALL PROVIDE ALL WIRING AND CONDUITS REQUIRE BY MANUFACTURER TO FIXTURES AND CONTROLS.
6. FINAL MOUNTING LOCATIONS OF ALL OCCUPANCY AND PHOTOCELL DEVICES SHALL COORDINATED WITH MANUFACTURERS RECOMMENDATIONS AND FIELD ADJUSTED WITH REPRESENTATIVE AS NECESSARY.

CONSTRUCTION NOTES

1. SWITCHING FROM INTERIOR OF BATTALION COMMANDERS QUARTERS.
2. MOUNT SIGN LUMINAIRE(S) AT 18'-0" ABOVE GRADE. VERIFY EXACT MOUNTING HEIGHT WITH CONSTRUCTION MANAGER PRIOR TO ROUGH-IN.
3. FIRE ALARM DEVICES TO INTERFACE WITH FACP. COORDINATE INSTALLATION WITH FIRE ALARM CONTRACTOR PRIOR TO ROUGH-IN.

STK ARCHITECTURE, INC.
42095 ZEVO DR., TEMECULA, CALIFORNIA 92590-3780
Phone: 951.296.9110 Fax: 951.296.6079 Email: stk@stkinc.com

CONSULTANT:
DESIGN WEST ENGINEERING
MECHANICAL / ELECTRICAL / ENERGY CONSULTANTS
FIRE PROTECTION / ENERGY SOLUTIONS INC.

REVIEWED FOR CODE COMPLIANCE
THESE PLANS AND DOCUMENTS HAVE BEEN REVIEWED AND FOUND TO BE IN COMPLIANCE WITH THE 2022 CALIFORNIA BUILDING CODE AS AMENDED BY THE CITY OF PERRIS. THIS REVIEW IS LIMITED TO THE CODE REQUIREMENTS ONLY AND DOES NOT INCLUDE REVIEW OF ANY OTHER LAWS, ORDINANCES, RULES, REGULATIONS OR REQUIREMENTS. THE CONTRACTOR OF RECORD IS RESPONSIBLE FOR CONSTRUCTION IN COMPLIANCE WITH ALL APPLICABLE LAWS, ORDINANCES, RULES, REGULATIONS AND REQUIREMENTS. CITY APPROVAL OF THESE PLANS DOES NOT AUTHORIZE THE VIOLATION OF ANY LAW, ORDINANCE, RULE, REGULATION OR REQUIREMENT. CITY OF PERRIS BUILDING AND SAFETY DEPARTMENT
BY: [illegible] DATE: 05/05/2026

REGISTERED PROFESSIONAL ENGINEER
JACK KLOC
22839
SIGNED 05/05/2026
ELECTRICAL
STATE OF CALIFORNIA

PROJECT ADMINISTERED BY:
CITY OF PERRIS

101 NORTH "D" STREET
PERRIS, CA 92570

PROJECT NAME:
SOUTH FIRE STATION AND ADMINISTRATIVE BUILDING

PROJECT CIP: F077

2495 MURRIETA ROAD
PERRIS, CA 92585

ISSUE INFORMATION:

DATE:	INFORMATION:
11-26-25	95% CD SUBMITTAL
02-05-26	1st PC RESPONSE
02-19-26	2nd PC RESPONSE
04-27-26	4th PC RESPONSE

SHEET INFORMATION:
STK PROJECT NO.: 365-03-25
SCALE: AS NOTED
DATE: NOVEMBER 2025
PLOT DATE: –
DRAWN BY: JM / JM

SEAL:

SHEET TITLE:
LIGHTING PLAN - FIRE STATION SEG A

SHEET NO.:
E3.1A

05/05/2026 10:18AM
N:\PROJECTS\2025\25-114 Lewis the station\CAD\25-114 E-LgtPln.dwg

25-114

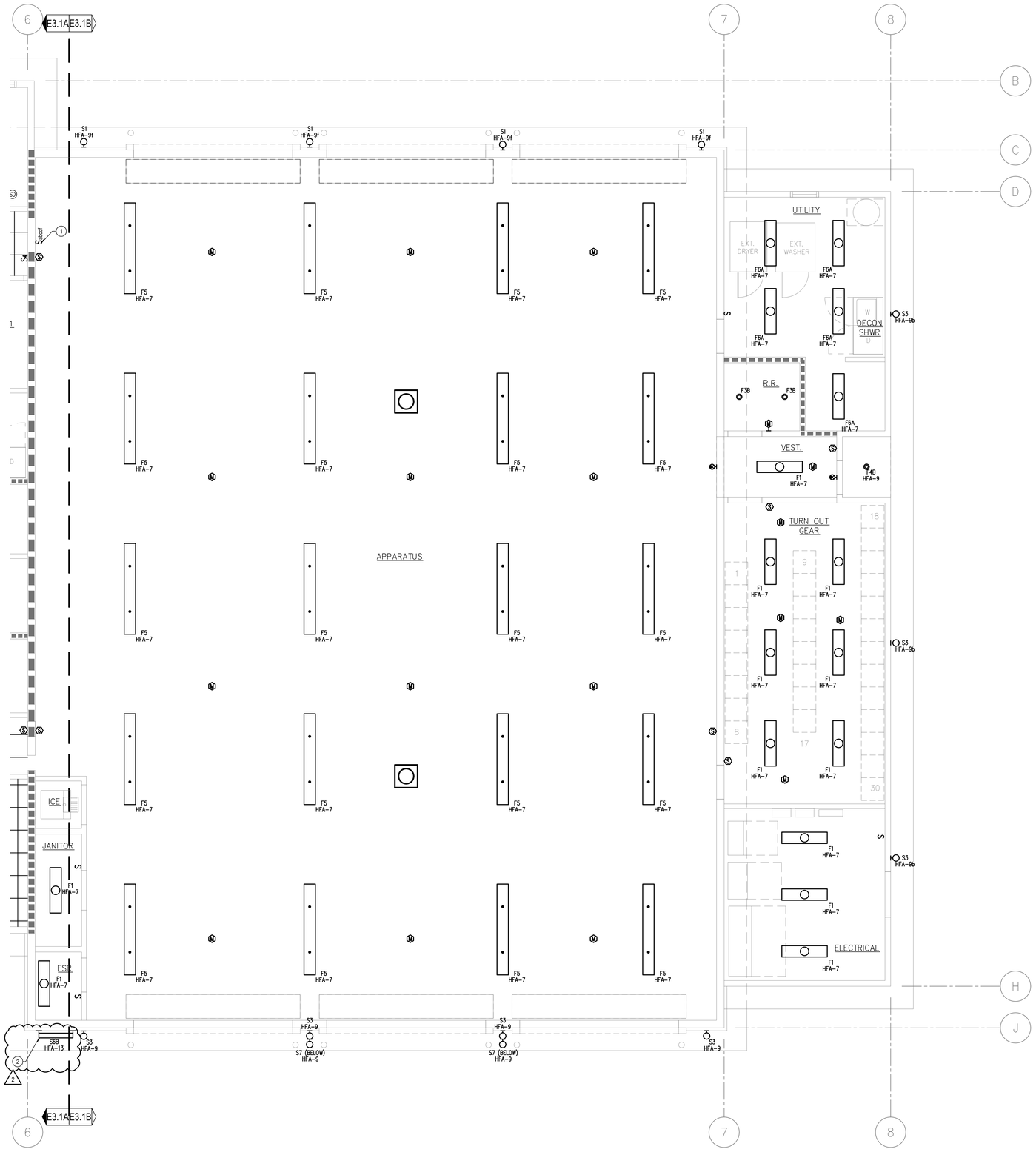

GENERAL NOTES

1. COORDINATE LIGHT FIXTURE LOCATIONS AND LIGHT SWITCH LOCATIONS, COLOR, AND STYLE WITH ARCHITECT.
2. WHERE OCCUPANCY SENSORS ARE SHOWN ON PLANS, VERIFY WATTAGE AND COVERAGE OF PRODUCT PROVIDED IS ADEQUATE FOR SPACE TO BE CONTROLLED. COVERAGE IS TO BE ADJUSTED TO AVOID ACCIDENTAL ACTIVATION OUTSIDE OF AREA. VERIFY WIRING REQUIREMENTS TO ADDITIONAL SENSORS, ROOM CONTROLLERS, RELAY PACKS, ETC WITH PRODUCT BEING PROVIDED. OCCUPANCY SENSORS SHALL NOT BE LOCATED WITHIN FOUR FEET OF ANY HVAC DIFFUSER.
3. WHERE DAYLIGHT SENSORS ARE SHOWN ON PLANS, LOCATION SHOWN IS DIAGRAMMATICAL. VERIFY LOCATION IS PER MANUFACTURER RECOMMENDATIONS BASED ON TYPE OF SENSOR (OPEN/CLOSED LOOP). VERIFY WIRING REQUIREMENTS TO ADDITIONAL SENSORS, ROOM CONTROLLERS, RELAY PACKS, ETC WITH PRODUCT BEING PROVIDED.
4. PROVIDE NON-SWITCHED 'HOT' POWER WIRE TO BATTERY PACK CHARGING/SENSOR IN ALL EMERGENCY FIXTURES.
5. REFER TO LIGHTING CONTROL DETAILS FOR WIRING AND CONDUIT REQUIREMENTS. CONTRACTOR SHALL PROVIDE ALL WIRING AND CONDUITS REQUIRE BY MANUFACTURER TO FIXTURES AND CONTROLS.
6. FINAL MOUNTING LOCATIONS OF ALL OCCUPANCY AND PHOTOCELL DEVICES SHALL COORDINATED WITH MANUFACTURERS RECOMMENDATIONS AND FIELD ADJUSTED WITH REPRESENTATIVE AS NECESSARY.

CONSTRUCTION NOTES

1. OVER-RIDE SWITCHES FOR EXTERIOR LIGHTING. SEE SOUTHERN AND EASTERN EXTERIOR LIGHTING ON THIS SHEET AND ELECTRICAL SITE PLAN: (1 / E1.0)
2. MOUNT SIGN LUMINAIRE AT 16'-0" ABOVE GRADE. VERIFY EXACT MOUNTING HEIGHT WITH CONSTRUCTION MANAGER PRIOR TO ROUGH-IN.

ELECTIRCAL LIGHTING PLAN - SEGMENT B | SCALE: 1/4" = 1'-0" | 1

STK ARCHITECTS, INC.
42095 ZEVO DR., TEMECULA, CALIFORNIA 92590-3780
Phone: 951.296.9110 Fax: 951.296.6079 Email: stk@stkinc.com

CONSULTANT:
DESIGN WEST ENGINEERING
MECHANICAL / ELECTRICAL / ENERGY CONSULTANTS
BUILDING ENERGY SOLUTIONS INC.

REVIEWED FOR CODE COMPLIANCE
THESE PLANS AND CODE DOCUMENTS HAVE BEEN REVIEWED AND FOUND TO BE IN SUBSTANTIAL COMPLIANCE WITH THE 2025 CALIFORNIA BUILDING CODE. THE APPROVAL OF THESE PLANS DOES NOT PERMIT THE VIOLATION OF ANY CODE, LAW OR REGULATION. THE CONTRACTOR OF RECORD IS RESPONSIBLE FOR CONSTRUCTION IN COMPLIANCE WITH THE APPROVED PLANS AND ALL APPLICABLE CODES. THE CONTRACTOR SHALL NOTIFY THE BUILDING OFFICIAL OF ANY CHANGES TO THE APPROVED PLANS. DEVIATIONS MAY REQUIRE ADDITIONAL REVIEW AND MAY INCUR ADDITIONAL PLAN REVIEW FEES.
BUILDING DEPARTMENT
DATE: 03/05/2026

REGISTERED PROFESSIONAL ENGINEER
STEVEN K. KUAN
22839
SIGNED 05/05/2026
ELECTRICAL
STATE OF CALIFORNIA

PROJECT ADMINISTERED BY:
CITY OF PERRIS

101 NORTH "D" STREET
PERRIS, CA 92570

PROJECT NAME:
SOUTH FIRE STATION AND ADMINISTRATIVE BUILDING

PROJECT CIP: F077

2495 MURRIETA ROAD
PERRIS, CA 92585

ISSUE INFORMATION:

DATE:	INFORMATION:
11-26-25	95% CD SUBMITTAL
02-05-26	1st PC RESPONSE
02-19-26	2nd PC RESPONSE
04-27-26	4th PC RESPONSE

SHEET INFORMATION:

STK PROJECT NO.: 365-03-25
SCALE: AS NOTED
DATE: NOVEMBER 2025
PLOT DATE: –
DRAWN BY: JM / JM

SEAL:

SHEET TITLE:
LIGHTING PLAN - FIRE STATION SEG B

SHEET NO.:
E3.1B

25-114

IN_PROJECT\2025\25-114 perris fire station_CAD\25-114 E3.1LightPlan.dwg
05/05/2026 10:18AM

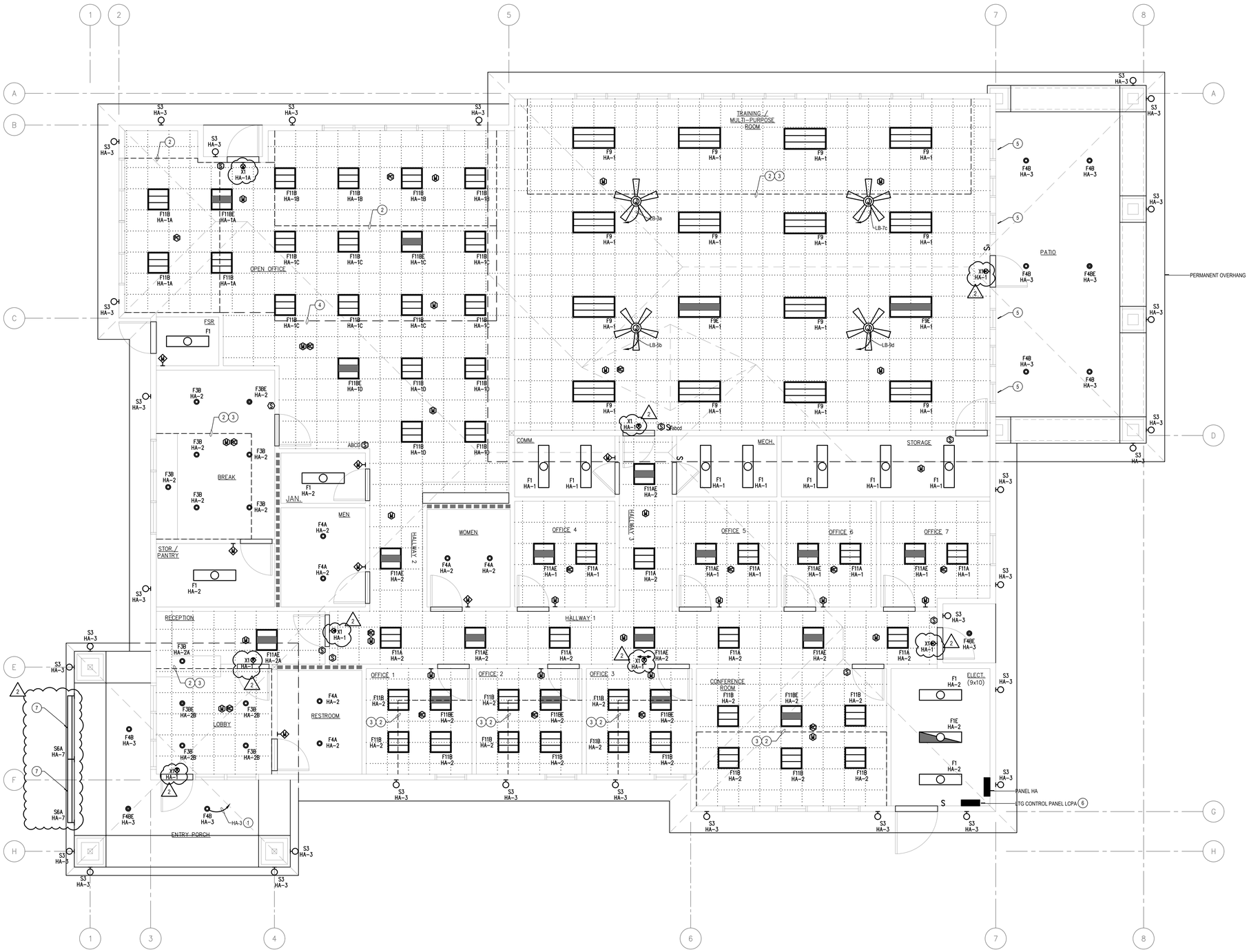

GENERAL NOTES

1. COORDINATE LIGHT FIXTURE LOCATIONS AND LIGHT SWITCH LOCATIONS, COLOR, AND STYLE WITH ARCHITECT.
2. WHERE OCCUPANCY SENSORS ARE SHOWN ON PLANS, VERIFY WATTAGE AND COVERAGE OF PRODUCT PROVIDED IS ADEQUATE FOR SPACE TO BE CONTROLLED. COVERAGE IS TO BE ADJUSTED TO AVOID ACCIDENTAL ACTIVATION OUTSIDE OF AREA. VERIFY WIRING REQUIREMENTS TO ADDITIONAL SENSORS, ROOM CONTROLLERS, RELAY PACKS, ETC WITH PRODUCT BEING PROVIDED. OCCUPANCY SENSORS SHALL NOT BE LOCATED WITHIN FOUR FEET OF ANY HVAC DIFFUSER.
3. WHERE DAYLIGHT SENSORS ARE SHOWN ON PLANS, LOCATION SHOWN IS DIAGRAMMATICAL. VERIFY LOCATION IS PER MANUFACTURER RECOMMENDATIONS BASED ON TYPE OF SENSOR (OPEN/CLOSED LOOP). VERIFY WIRING REQUIREMENTS TO ADDITIONAL SENSORS, ROOM CONTROLLERS, RELAY PACKS, ETC WITH PRODUCT BEING PROVIDED.
4. PROVIDE NON-SWITCHED 'HOT' POWER WIRE TO BATTERY PACK CHARGING/SENSOR IN ALL EMERGENCY FIXTURES.
5. REFER TO LIGHTING CONTROL DETAILS FOR WIRING AND CONDUIT REQUIREMENTS. CONTRACTOR SHALL PROVIDE ALL WIRING AND CONDUITS REQUIRE BY MANUFACTURER TO FIXTURES AND CONTROLS.
6. FINAL MOUNTING LOCATIONS OF ALL OCCUPANCY AND PHOTOCELL DEVICES SHALL COORDINATED WITH MANUFACTURERS RECOMMENDATIONS AND FIELD ADJUSTED WITH REPRESENTATIVE AS NECESSARY.

CONSTRUCTION NOTES

1. ROUTE CIRCUIT VIA LIGHTING CONTROL PANEL LCPA.
2. PRIMARY DAYLIT AREA, PER CALIFORNIA ENERGY CODE.
3. TOTAL INSTALLED WATTS IN PRIMARY SIDELIT DAYLIT ZONE IN THE SPACE DOES NOT EXCEED 120 WATTS. AUTOMATIC DAYLIGHTING CONTROLS ARE NOT REQUIRED PER SECTION 130.1(D) EXCEPTION 3.
4. SECONDARY DAYLIT AREA, PER CALIFORNIA ENERGY CODE.
5. AUTOMATIC DAYLIGHITNG CONTROLS ARE NOT REQUIRED IN GLAZED AREAS WITH OVERHANGS PER SECTION 130.1(D) EXCEPTION 2.
6. NLIGHT LIGHTING CONTROL PANEL WITH DIGITAL TIMECLOCK AND FIELD CONFIGURABLE RELAYS MODEL# ARPINTENC08NLT-5FCR-MVOLT-1VB-SC-SM-DTC.
7. MOUNT SIGN LUMINAIRE(S) AT 16'-6" ABOVE GRADE. VERIFY EXACT MOUNTING HEIGHT WITH CONSTRUCTION MANAGER PRIOR TO ROUGH-IN.

LIGHTING PLAN - ADMIN BUILDING | SCALE: 1/4" = 1'-0" | 1

STK ARCHITECTURE, INC.
42095 ZEVO DR., TEMECULA, CALIFORNIA 92590-3780
Phone: 951.296.9110 Fax: 951.296.6079 Email: stk@stkinc.com

CONSULTANT:
DESIGN WEST ENGINEERING
ARCHITECTURAL / ENERGY CONSULTANTS
ELECTRICAL / ENERGY CONSULTANTS
DEPARTMENT SOLUTIONS INC.

REVIEWED FOR CODE COMPLIANCE
THESE PLANS AND DOCUMENTS HAVE BEEN REVIEWED AND FOUND TO BE IN SUBSTANTIAL COMPLIANCE WITH THE 2025 CALIFORNIA BUILDING CODE AS AMENDED BY THE CITY OF PERRIS. THIS APPROVAL DOES NOT AUTHORIZE ANY DEVIATIONS FROM THE CODE. THE CONTRACTOR IS RESPONSIBLE FOR CONSTRUCTION IN ACCORDANCE WITH THE CODE. THE CONTRACTOR OF RECORD SHALL BE RESPONSIBLE FOR ALL CONSTRUCTION, MEANS, METHODS, TECHNIQUES, SEQUENCES AND PROCEDURES AND FOR ALL SAFETY PRECAUTIONS AND PROGRAMS IN CONNECTION WITH THE WORK. THE CONTRACTOR SHALL NOTIFY THE BUILDING OFFICIAL OF ANY DEVIATIONS FROM THE APPROVED PLANS AND OBTAIN APPROVAL FOR THE CHANGE.
BY: _____ DATE: _____

REGISTERED PROFESSIONAL ENGINEER
RENICK KYLE
22839
SIGNED 05/05/2026
ELECTRICAL
STATE OF CALIFORNIA

PROJECT ADMINISTERED BY:
CITY OF PERRIS

101 NORTH "D" STREET
PERRIS, CA 92570

PROJECT NAME:
SOUTH FIRE STATION AND ADMINISTRATIVE BUILDING

PROJECT CIP: F077

2495 MURRIETA ROAD
PERRIS, CA 92585

ISSUE INFORMATION:

DATE:	INFORMATION:
11-26-25	95% CD SUBMITTAL
02-05-26	1st PC RESPONSE
02-19-26	2nd PC RESPONSE
04-27-26	4th PC RESPONSE

SHEET INFORMATION:

STK PROJECT NO.: 365-03-25
SCALE: AS NOTED
DATE: NOVEMBER 2025
PLOT DATE: –
DRAWN BY: JM / JM

SEAL:

SHEET TITLE:
LIGHTING PLAN - ADMIN BUILDING

SHEET NO.:
E3.2

25-114

05/05/2026 10:58AM
R:\PROJECTS\2025\25-114 perris fire station_CA\25-114 ELA.pln.dwg

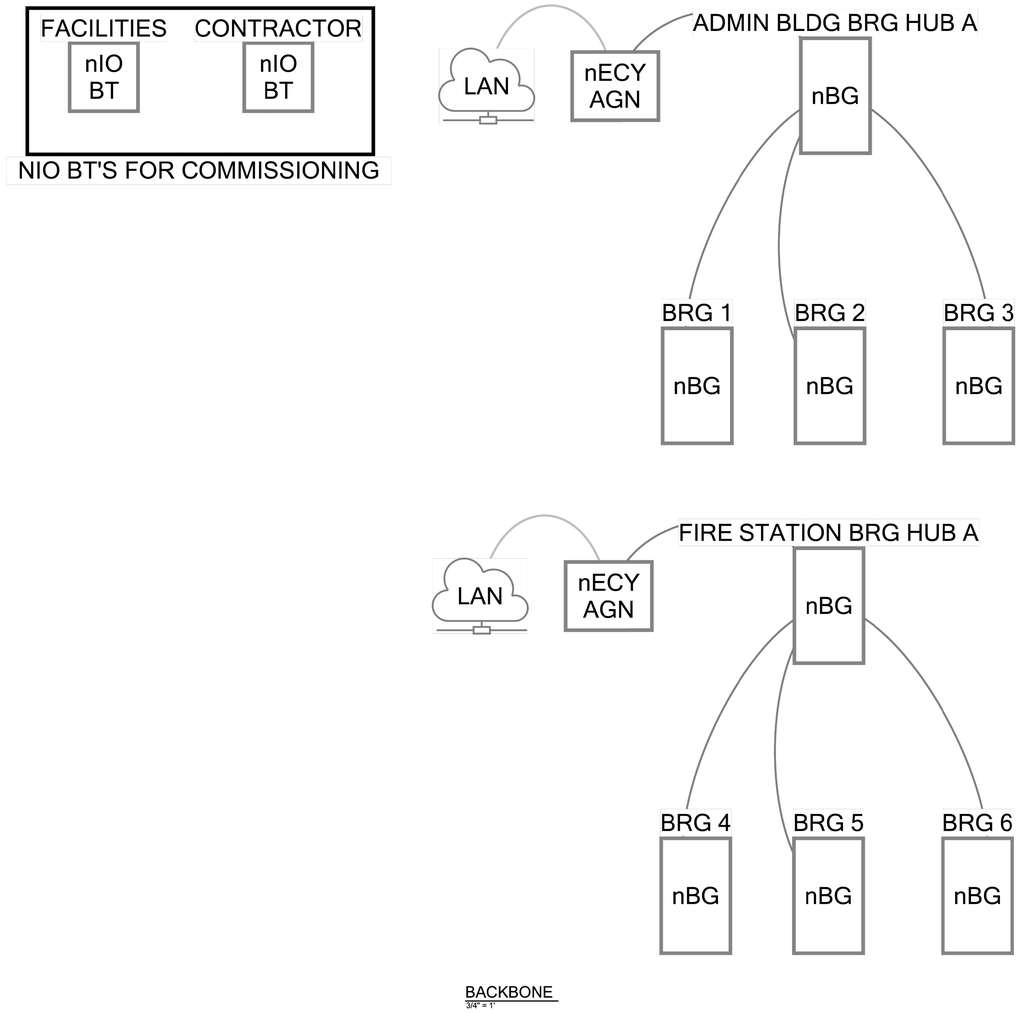

BACKBONE
3/4" = 1'

PROJECT NOTES

Basis Of Design

1. THIS DESIGN IS BASED ON SHEET E1.0, E3.1, E3.1B AND E3.2, DATED 11/26/2025 (95% CD SUBMITTAL)
2. PLUG LOADS HAVE NOT BEEN PROVIDED BASED ON PLAN SET, DATED 11/26/2025 (95% CD SUBMITTAL)
3. A NETWORK SOLUTION WITH TIME-CLOCK CAPABILITIES HAS BEEN PROVIDED
4. ADR HAS BEEN PROVIDED AS THE TOTAL LIGHTING LOAD IS GREATER THAN 4,000W
5. BACNET INTEGRATION HAS NOT BEEN PROVIDED
6. RESIDENTIAL UNIT LIGHTING CONTROL IS PROVIDED
7. EM SYSTEM IS CONSIDERED TO BE BATTERY PACK

PRODUCT LEGEND
BACKBONE

LAN	LAN Local Area Network (LAN) connection is assumed to be provided by others or present at this location. All networked devices connecting to the LAN should be on the same subnet.
nBG	NBRG 8 KIT Bridge, Kit
nECY AGN	NECY MVOLT ADR ENC NW GFXK nLight Eclypse, 120-277V, OpenADR, Enclosure for nLight ECLYPSE, No Wi-Fi, nGWY2 GFX and PS 150 Power Supply
nIO BT	NIO BT nLight Device, Bluetooth low energy communication module

Disclaimer

THIS CONTROLS SYSTEM LAYOUT DIAGRAM IS NOT A PROFESSIONAL ENGINEERING DRAWING, AND IS PROVIDED ONLY FOR INFORMATIONAL PURPOSES AND TO HELP THE CUSTOMER OR END-USER (AS APPLICABLE) UNDERSTAND HOW VARIOUS CONTROLS DEVICES ARE ARRANGED AND CONNECT TO EACH OTHER. THIS CONTROLS SYSTEM LAYOUT DIAGRAM IS STRICTLY BASED ON THE INFORMATION PROVIDED TO ACUITY BRANDS, AND IS PROVIDED WITHOUT WARRANTY AS TO ACCURACY, COMPLETENESS, RELIABILITY OR OTHERWISE. IF THE INFORMATION (INCLUDING BUT NOT LIMITED TO FLOOR-PLANS, REFLECTED CEILING PLANS, ELECTRICAL PLANS AND SPECIFICATIONS) PROVIDED TO ACUITY BRANDS IS INCOMPLETE OR NOT CURRENT (I.E., NEWER VERSIONS EXIST), THE ACCURACY OF THE LAYOUT DIAGRAM MAY BE ADVERSELY AFFECTED. ONCE THIS CONTROLS SYSTEM LAYOUT DIAGRAM IS RECEIVED BY THE CUSTOMER OR END-USER (AS APPLICABLE), IT IS THE OBLIGATION OF THE CUSTOMER OR END-USER (AS APPLICABLE) TO CONSULT WITH A PROFESSIONAL ENGINEERING ADVISOR TO DETERMINE WHETHER THE PROPOSED DESIGN MEETS THE APPLICABLE PROJECT REQUIREMENTS FOR THE CONTROLS SYSTEM'S PERFORMANCE, CODE COMPLIANCE, SAFETY, SUITABILITY AND EFFECTIVENESS FOR USE IN A PARTICULAR APPLICATION. IN NO EVENT WILL ACUITY BRANDS BE RESPONSIBLE FOR ANY LOSS RESULTING FROM ANY USE OF THIS CONTROLS SYSTEM LAYOUT DIAGRAM.

STK ARCHITECTS, INC.
42095 ZEVO DR., TEMECULA, CALIFORNIA 92590-3780
Phone: 951.296.9110 Fax: 951.296.6079 Email: stk@stkinc.com

CONSULTANT:

REVIEWED FOR CODE COMPLIANCE

THESE DRAWINGS AND DOCUMENTS HAVE BEEN REVIEWED AND FOUND TO BE IN SUBSTANTIAL COMPLIANCE WITH THE 2022 CALIFORNIA ENERGY CODE. THIS REVIEW IS SUBJECT TO ALL LIMITATIONS IMPOSED BY THE CALIFORNIA ENERGY CODE, AND ANY OTHER APPLICABLE CODES, RULES, AND REGULATIONS. THE CONTRACTOR IS RESPONSIBLE FOR CONSTRUCTING THIS BUILDING IN ACCORDANCE WITH THE CONSTRUCTION DOCUMENTS. THE CONTRACTOR SHALL CONTROL THE JOB SITE CONDITIONS DURING CONSTRUCTION, AND SHALL BE RESPONSIBLE FOR ALL SAFETY PRECAUTIONS AND PROGRAMS IN CONNECTION WITH THE WORK. THE CONTRACTOR SHALL DEFEND, INDEMNIFY AND HOLD THE DESIGNER HARMLESS FROM ALL CLAIMS, DAMAGES, LOSSES, AND EXPENSES ARISING OUT OF OR RESULTING FROM PERFORMANCE OF THE WORK. DESIGNER'S REVIEW DOES NOT RELIEVE THE CONTRACTOR OF RESPONSIBILITY FOR COMPLIANCE WITH THE CONSTRUCTION DOCUMENTS. ANY DEVIATIONS FROM THE APPROVED PLANS MUST BE REVIEWED AND APPROVED BY DESIGN WEST ENGINEERING, INC. BEFORE CONSTRUCTION.

DESIGN WEST ENGINEERING
MECHANICAL, ELECTRICAL, ENERGY CONSULTANTS

BUILDING PERMIT SOLUTIONS INC.

REGISTERED PROFESSIONAL ENGINEER
JEREMY KOZA
22839
SIGNED: 04/24/2026
ELECTRICAL
STATE OF CALIFORNIA

PROJECT ADMINISTERED BY:
CITY OF PERRIS

101 NORTH "D" STREET
PERRIS, CA 92570

PROJECT NAME:
SOUTH FIRE STATION AND ADMINISTRATIVE BUILDING

PROJECT CIP: F077

2495 MURRIETA ROAD
PERRIS, CA 92585

ISSUE INFORMATION:

DATE:	INFORMATION:
11-26-25	95% CD SUBMITTAL
02-05-26	1 1st PC RESPONSE
02-19-26	2 2nd PC RESPONSE

SHEET INFORMATION:

STK PROJECT NO.: 365-03-25
SCALE: AS NOTED
DATE: NOVEMBER 2025
PLOT DATE: --
DRAWN BY: JM / JM

SEAL:

SHEET TITLE:
LIGHTING CONTROL RISER DIAGRAM

SHEET NO.:
E3.3

04/24/2026 12:42PM R:\PROJECTS\2025\25-114 Lennar Ike Iceland_CA\DSI\ 14 E-LS\Controls.dwg

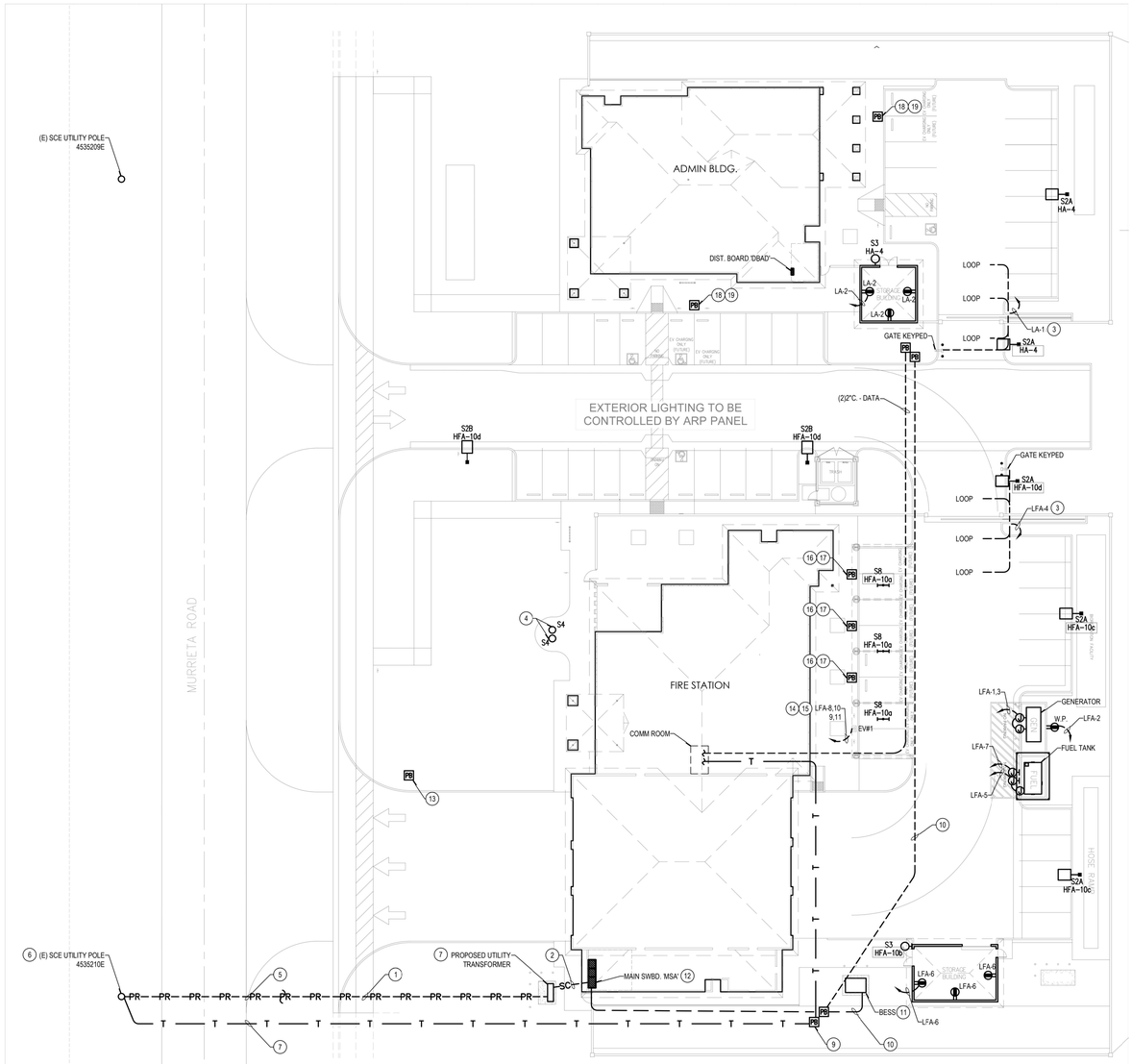

ELECTRICAL SITE PLAN
1/16" = 1'

PROJECT NOTES
Basis Of Design
1 THIS DESIGN IS BASED ON SHEET E1.0, E3.1, E3.1B AND E3.2, DATED 11/26/2025 (95% CD SUBMITTAL)
2 PLUG LOADS HAVE NOT BEEN PROVIDED BASED ON PLAN SET, DATED 11/26/2025 (95% CD SUBMITTAL)
3 A NETWORK SOLUTION WITH TIME-CLOCK CAPABILITIES HAS BEEN PROVIDED
4 ADR HAS BEEN PROVIDED AS THE TOTAL LIGHTING LOAD IS GREATER THAN 4,000W
5 BACNET INTEGRATION HAS NOT BEEN PROVIDED
6 RESIDENTIAL UNIT LIGHTING CONTROL IS PROVIDED
7 EM SYSTEM IS CONSIDERED TO BE BATTERY PACK

Disclaimer

THIS CONTROLS SYSTEM LAYOUT DIAGRAM IS NOT A PROFESSIONAL ENGINEERING DRAWING, AND IS PROVIDED ONLY FOR INFORMATIONAL PURPOSES AND TO HELP THE CUSTOMER OR END-USER (AS APPLICABLE) UNDERSTAND HOW VARIOUS CONTROLS DEVICES ARE ARRANGED AND CONNECT TO EACH OTHER. THIS CONTROLS SYSTEM LAYOUT DIAGRAM IS STRICTLY BASED ON THE INFORMATION PROVIDED TO ACUITY BRANDS, AND IS PROVIDED WITHOUT WARRANTY AS TO ACCURACY, COMPLETENESS, RELIABILITY OR OTHERWISE. IF THE INFORMATION (INCLUDING BUT NOT LIMITED TO FLOOR-PLANS, REFLECTED CEILING PLANS, ELECTRICAL PLANS AND SPECIFICATIONS) PROVIDED TO ACUITY BRANDS IS INCOMPLETE OR NOT CURRENT (I.E., NEWER VERSIONS EXIST), THE ACCURACY OF THE LAYOUT DIAGRAM MAY BE ADVERSELY AFFECTED. ONCE THIS CONTROLS SYSTEM LAYOUT DIAGRAM IS RECEIVED BY THE CUSTOMER OR END-USER (AS APPLICABLE), IT IS THE OBLIGATION OF THE CUSTOMER OR END-USER (AS APPLICABLE) TO CONSULT WITH A PROFESSIONAL ENGINEERING ADVISOR TO DETERMINE WHETHER THE PROPOSED DESIGN MEETS THE APPLICABLE PROJECT REQUIREMENTS FOR THE CONTROLS SYSTEM'S PERFORMANCE, CODE COMPLIANCE, SAFETY, SUITABILITY AND EFFECTIVENESS FOR USE IN A PARTICULAR APPLICATION. IN NO EVENT WILL ACUITY BRANDS BE RESPONSIBLE FOR ANY LOSS RESULTING FROM ANY USE OF THIS CONTROLS SYSTEM LAYOUT DIAGRAM.

STK ARCHITECTURE, INC.
42095 ZEVO DR., TEMECULA, CALIFORNIA 92590-3780
Phone: 951.296.9110 Fax: 951.296.6079 Email: stk@stkinc.com

CONSULTANT:
DESIGN WEST ENGINEERING
MECHANICAL / ELECTRICAL CONSULTANTS
BUILDING ENERGY SOLUTIONS INC.

REVIEWED FOR CODE COMPLIANCE
THESE DESIGN AND CONSTRUCTION DOCUMENTS HAVE BEEN REVIEWED AND FOUND TO BE IN SUBSTANTIAL COMPLIANCE WITH THE 2022 CALIFORNIA BUILDING CODE. THIS REVIEW IS SUBJECT TO ALL LIMITATIONS AND CONDITIONS SET FORTH IN THE LETTER OF TRANSMITTAL. THE CONTRACTOR IS RESPONSIBLE FOR THE CONSTRUCTION OF THE PROJECT IN ACCORDANCE WITH THE APPROVED PLANS AND ALL APPLICABLE CODES. THE CONTRACTOR SHALL NOT DEVIATE FROM THE APPROVED PLANS WITHOUT THE PRIOR APPROVAL OF THE BUILDING OFFICIAL. THE CONTRACTOR SHALL ENSURE THAT ALL WORK IS INSPECTED AS REQUIRED BY THE BUILDING OFFICIAL AND THAT ALL INSPECTIONS ARE RECORDED IN THE JOB RECORD. THIS REVIEW DOES NOT RELIEVE THE CONTRACTOR OF THE RESPONSIBILITY FOR COMPLIANCE WITH ALL APPLICABLE CODES AND REGULATIONS.
BUILDING DEPARTMENT
CITY OF PERRIS
DEPARTMENT:

REGISTERED PROFESSIONAL ENGINEER
JEREMY KOCH
22839
SIGNED 04/24/2026
ELECTRICAL
STATE OF CALIFORNIA

PROJECT ADMINISTERED BY:
CITY OF PERRIS

101 NORTH "D" STREET
PERRIS, CA 92570

PROJECT NAME:
SOUTH FIRE STATION AND ADMINISTRATIVE BUILDING

PROJECT CIP: F077

2495 MURRIETA ROAD
PERRIS, CA 92585

ISSUE INFORMATION:

DATE:	INFORMATION:
11-26-25	95% CD SUBMITTAL
02-05-26	1st PC RESPONSE
02-19-26	2nd PC RESPONSE

SHEET INFORMATION:

STK PROJECT NO.: 365-03-25
SCALE: AS NOTED
DATE: NOVEMBER 2025
PLOT DATE: --
DRAWN BY: JM / JM

SEAL:

SHEET TITLE:
LIGHTING CONTROLS - SITE

SHEET NO.:
E3.4

LIGHTING CONTROLS - SITE | SCALE: NOT TO SCALE | 1

25-114

04/24/2026 12:42PM
R:\PROJECTS\2025\25-114 perris fire station_CAD\25-114 E3.dgConfirm.dwg

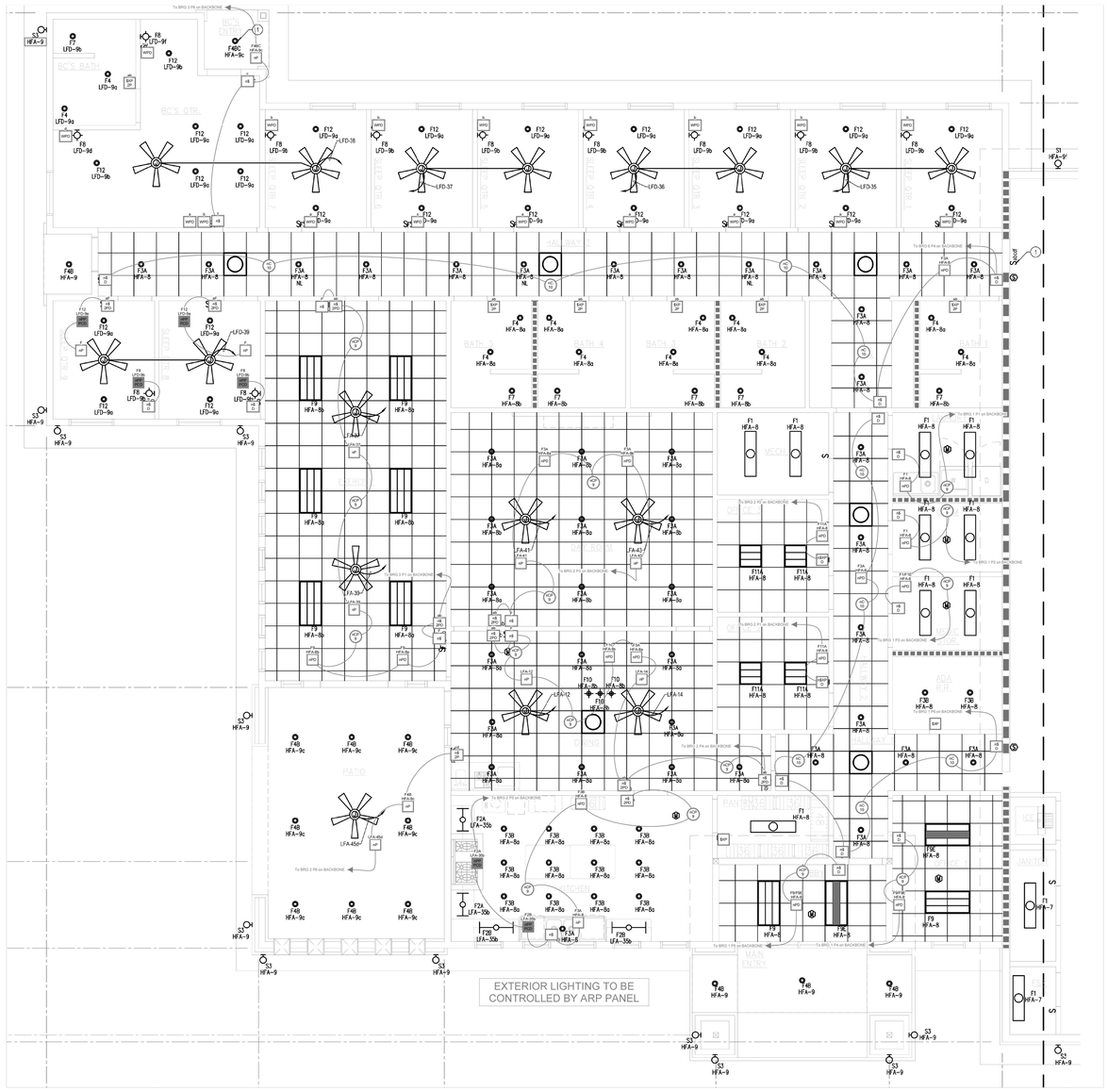

ELECTRICAL LIGHTING PLAN - SEGMENT A
1/4" = 1'

PROJECT NOTES

Basis Of Design

1. THIS DESIGN IS BASED ON SHEET E1.0, E3.1, E3.1B AND E3.2, DATED 11/26/2025 (95% CD SUBMITTAL)
2. PLUG LOADS HAVE NOT BEEN PROVIDED BASED ON PLAN SET, DATED 11/26/2025 (95% CD SUBMITTAL)
3. A NETWORK SOLUTION WITH TIME-CLOCK CAPABILITIES HAS BEEN PROVIDED
4. ADR HAS BEEN PROVIDED AS THE TOTAL LIGHTING LOAD IS GREATER THAN 4,000W
5. BACNET INTEGRATION HAS NOT BEEN PROVIDED
6. RESIDENTIAL UNIT LIGHTING CONTROL IS PROVIDED
7. EM SYSTEM IS CONSIDERED TO BE BATTERY PACK

PRODUCT LEGEND
LC1.1 (E3.1A)

nC 10	NCM 10 RJB Low Voltage Ceiling Mount Sensor, Large Motion / Extended Range 360° Lens, Rear RJ-45 Ports
nCP 9	NCM PDT 9 RJB Low Voltage Ceiling Mount Sensor, Passive Dual Technology, Small Motion / Standard Range 360° Lens, Rear RJ-45 Ports
n$ 2PD	NPODMA 2P DX XX nLight Wired Aesthetic Wallpod, 2-Pole, Raise/Lower Dimming
n$ 2P	NPODMA 2P XX nLight Wired Aesthetic Wallpod, 2-Pole
n$ D	NPODMA DX XX nLight Wired Aesthetic Wallpod, Raise/Lower Dimming
n$	NPODMA XX nLight Wired Aesthetic Wallpod
nPP PCD	NPP PCD EFP NPP series fuses, Phase Control Dimming, External Fault Protection
nPD	NPP16 D EFP Power/Relay Pack, Dimming, External Fault Protection
nP	NPP16 EFP Power/Relay Pack, External Fault Protection
nSXP D	NWSXA PDT LV DX XX Aesthetic Wall Switch Occupancy Sensor, Passive Dual Technology, Low Voltage, Raise/Lower Dimming
WPD	WPD XX Wall Phase Dimmer
$XP 2P	WSXA PDT 2P XX Wall Switch, Passive Dual Technology, 2-Pole
$XP	WSXA PDT XX Wall Switch, Passive Dual Technology

Disclaimer

THIS CONTROLS SYSTEM LAYOUT DIAGRAM IS NOT A PROFESSIONAL ENGINEERING DRAWING, AND IS PROVIDED ONLY FOR INFORMATIONAL PURPOSES AND TO HELP THE CUSTOMER OR END-USER (AS APPLICABLE) UNDERSTAND HOW VARIOUS CONTROLS DEVICES ARE ARRANGED AND CONNECT TO EACH OTHER. THIS CONTROLS SYSTEM LAYOUT DIAGRAM IS STRICTLY BASED ON THE INFORMATION PROVIDED TO ACUITY BRANDS, AND IS PROVIDED WITHOUT WARRANTY AS TO ACCURACY, COMPLETENESS, RELIABILITY OR OTHERWISE. IF THE INFORMATION (INCLUDING BUT NOT LIMITED TO FLOOR-PLANS, REFLECTED CEILING PLANS, ELECTRICAL PLANS AND SPECIFICATIONS) PROVIDED TO ACUITY BRANDS IS INCOMPLETE OR NOT CURRENT (I.E., NEWER VERSIONS EXIST), THE ACCURACY OF THE LAYOUT DIAGRAM MAY BE ADVERSELY AFFECTED. ONCE THIS CONTROLS SYSTEM LAYOUT DIAGRAM IS RECEIVED BY THE CUSTOMER OR END-USER (AS APPLICABLE), IT IS THE OBLIGATION OF THE CUSTOMER OR END-USER (AS APPLICABLE) TO CONSULT WITH A PROFESSIONAL ENGINEERING ADVISOR TO DETERMINE WHETHER THE PROPOSED DESIGN MEETS THE APPLICABLE PROJECT REQUIREMENTS FOR THE CONTROLS SYSTEM'S PERFORMANCE, CODE COMPLIANCE, SAFETY, SUITABILITY AND EFFECTIVENESS FOR USE IN A PARTICULAR APPLICATION. IN NO EVENT WILL ACUITY BRANDS BE RESPONSIBLE FOR ANY LOSS RESULTING FROM ANY USE OF THIS CONTROLS SYSTEM LAYOUT DIAGRAM.

LIGHTING CONTROLS - FIRE STATION SEGMENT A | SCALE: NOT TO SCALE | 1

STK ARCHITECTS, INC.
42095 ZEVO DR., TEMECULA, CALIFORNIA 92590-3780
Phone: 951.296.9110 Fax: 951.296.6079 Email: stk@stkinc.com

CONSULTANT:

REVIEWED FOR CODE COMPLIANCE

THESE PLANS AND CODE DOCUMENTS HAVE BEEN REVIEWED AND FOUND TO BE IN SUBSTANTIAL COMPLIANCE WITH THE 2022 CALIFORNIA BUILDING CODE. THIS APPROVAL IS SUBJECT TO ALL APPLICABLE PROVISIONS OF THE CODE AND DOES NOT AUTHORIZE ANY VIOLATIONS OF THE CODE. THE BUILDING OFFICIAL AND HIS/HER SUPERVISORS ASSUME NO RESPONSIBILITY FOR CONSTRUCTION, WORK PERFORMED, OR CONSTRUCTION METHODS. THE CONTRACTOR OF RECORD IS RESPONSIBLE FOR COMPLIANCE WITH ALL APPLICABLE CODES AND REGULATIONS. THIS REVIEW DOES NOT AUTHORIZE CHANGES TO THE APPROVED PLANS WITHOUT PRIOR APPROVAL. IF DEFICIENCIES ARE DISCOVERED DURING CONSTRUCTION, CORRECTIONS MUST BE MADE TO COMPLY WITH THE CODE.

BY: [illegible] DATE: 2/19/2026

DESIGN WEST ENGINEERING
MECHANICAL / ELECTRICAL / ENERGY CONSULTANTS
DEPARTMENT.
BUILDING ENERGY SOLUTIONS INC.

REGISTERED PROFESSIONAL ENGINEER
DAVID M. KOZA
22839
SIGNED: 04/24/2026
ELECTRICAL
STATE OF CALIFORNIA

PROJECT ADMINISTERED BY:
CITY OF PERRIS

101 NORTH "D" STREET
PERRIS, CA 92570

PROJECT NAME:
SOUTH FIRE STATION AND ADMINISTRATIVE BUILDING

PROJECT CIP: F077

2495 MURRIETA ROAD
PERRIS, CA 92585

ISSUE INFORMATION:

DATE:	INFORMATION:
11-26-25	95% CD SUBMITTAL
02-05-26	1st PC RESPONSE
02-19-26	2nd PC RESPONSE

SHEET INFORMATION:

STK PROJECT NO.: 365-03-25
SCALE: AS NOTED
DATE: NOVEMBER 2025
PLOT DATE: –
DRAWN BY: JM / JM

SEAL:

SHEET TITLE:
LIGHTING CONTROLS - FIRE STATION SEGMENT A

SHEET NO.:
E3.5

25-114

04/24/2026 12:43PM
R:_PROJECTS\2025\25-114 perris fire station_CA\2026.11.E.E.rcp\Drawing

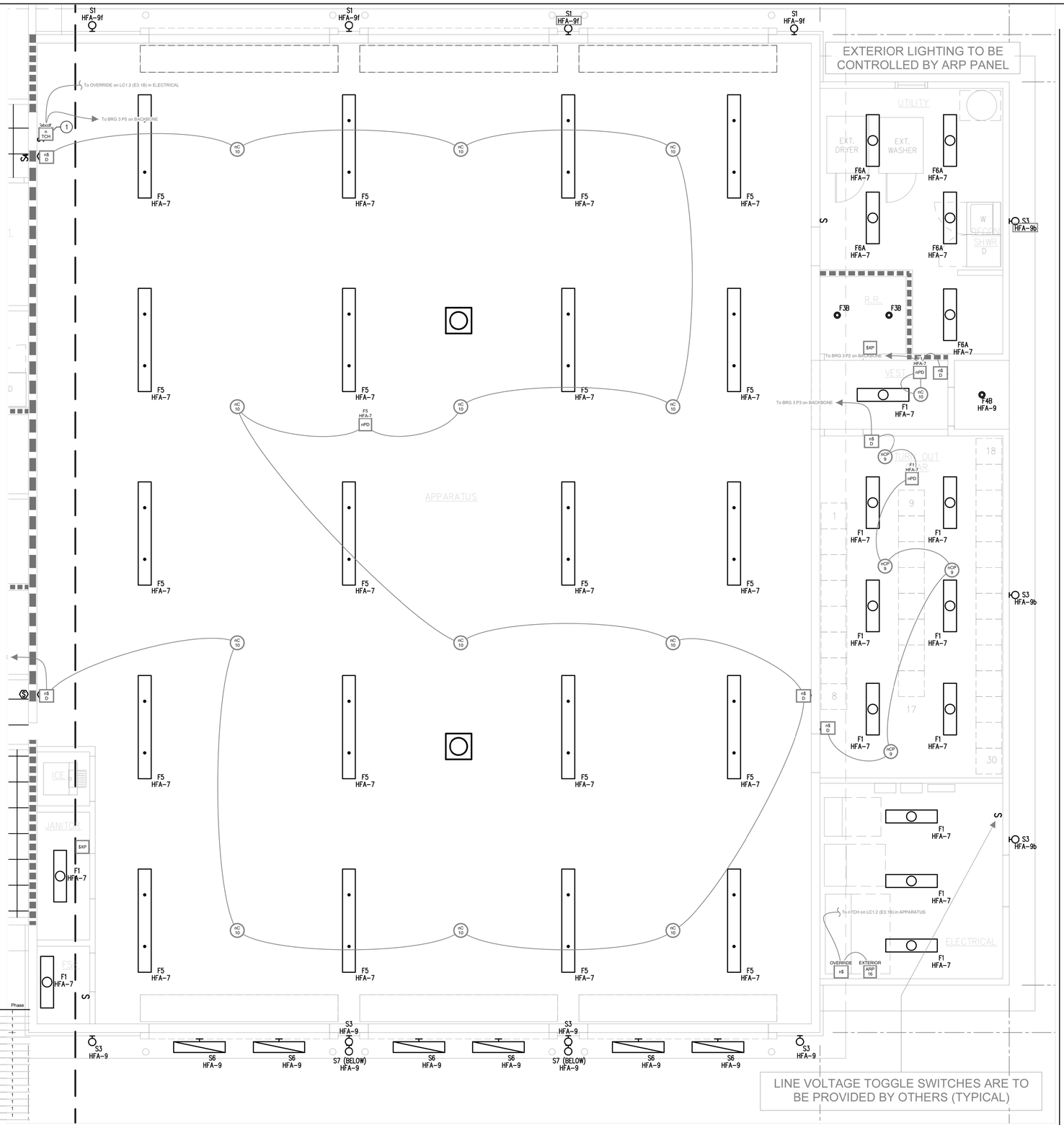

Panel Schedule

Location: LC1.2 (E3.1B) - ELECTRICAL
Catalog: ARP INTENC16 NLT 16FCR MVOLT 1VB SC SM
Name: ARP16 EXTERIOR

Supply Circuit:
Voltage:
Enclosure Dims:
Mounting:

Row	Line	Feed	Poles	Catalog	Voltage	Load	Zone	Phase
1	HFA	9	1	1FCR	277	LTG - EXTERIOR BUILD		1
2	HFA	9	1	1FCR	277	LTG - EXTERIOR BUILD	b	1
3	HFA	9	1	1FCR	277	LTG - EXTERIOR BUILD	f	1
4	HFA	10	1	1FCR	277	LIGHTING EXTERIOR SITE	a	1
5	HFA	10	1	1FCR	277	LIGHTING EXTERIOR SITE	b	1
6	HFA	10	1	1FCR	277	LIGHTING EXTERIOR SITE	c	1
7	HFA	10	1	1FCR	277	LIGHTING EXTERIOR SITE	d	1
8	HA	3	1	1FCR	277	LTG - EXTERIOR BUILD		1
9	HA	4	1	1FCR	277	LIGHTING EXTERIOR SITE		1
10			1	FCR		SPARE		1
11			1	FCR		SPARE		1
12			1	FCR		SPARE		1
13			1	FCR		SPARE		1
14			1	FCR		SPARE		1
15			1	FCR		SPARE		1
16			1	FCR		SPARE		1

Relay Summary
Active: 9
Spare: 7
Spaces: 0

ELECTRICAL LIGHTING PLAN - SEGMENT B

3/8" = 1'

Disclaimer

THIS CONTROLS SYSTEM LAYOUT DIAGRAM IS NOT A PROFESSIONAL ENGINEERING DRAWING, AND IS PROVIDED ONLY FOR INFORMATIONAL PURPOSES AND TO HELP THE CUSTOMER OR END-USER (AS APPLICABLE) UNDERSTAND HOW VARIOUS CONTROLS DEVICES ARE ARRANGED AND CONNECT TO EACH OTHER. THIS CONTROLS SYSTEM LAYOUT DIAGRAM IS STRICTLY BASED ON THE INFORMATION PROVIDED TO ACUITY BRANDS, AND IS PROVIDED WITHOUT WARRANTY AS TO ACCURACY, COMPLETENESS, RELIABILITY OR OTHERWISE. IF THE INFORMATION (INCLUDING BUT NOT LIMITED TO FLOOR-PLANS, REFLECTED CEILING PLANS, ELECTRICAL PLANS AND SPECIFICATIONS) PROVIDED TO ACUITY BRANDS IS INCOMPLETE OR NOT CURRENT (I.E., NEWER VERSIONS EXIST), THE ACCURACY OF THE LAYOUT DIAGRAM MAY BE ADVERSELY AFFECTED. ONCE THIS CONTROLS SYSTEM LAYOUT DIAGRAM IS RECEIVED BY THE CUSTOMER OR END-USER (AS APPLICABLE), IT IS THE OBLIGATION OF THE CUSTOMER OR END-USER (AS APPLICABLE) TO CONSULT WITH A PROFESSIONAL ENGINEERING ADVISOR TO DETERMINE WHETHER THE PROPOSED DESIGN MEETS THE APPLICABLE PROJECT REQUIREMENTS FOR THE CONTROLS SYSTEM'S PERFORMANCE, CODE COMPLIANCE, SAFETY, SUITABILITY AND EFFECTIVENESS FOR USE IN A PARTICULAR APPLICATION. IN NO EVENT WILL ACUITY BRANDS BE RESPONSIBLE FOR ANY LOSS RESULTING FROM ANY USE OF THIS CONTROLS SYSTEM LAYOUT DIAGRAM.

PROJECT NOTES

Basis Of Design

1. THIS DESIGN IS BASED ON SHEET E1.0, E3.1, E3.1B AND E3.2, DATED 11/26/2025 (95% CD SUBMITTAL)
2. PLUG LOADS HAVE NOT BEEN PROVIDED BASED ON PLAN SET, DATED 11/26/2025 (95% CD SUBMITTAL)
3. A NETWORK SOLUTION WITH TIME-CLOCK CAPABILITIES HAS BEEN PROVIDED
4. ADR HAS BEEN PROVIDED AS THE TOTAL LIGHTING LOAD IS GREATER THAN 4,000W
5. BACNET INTEGRATION HAS NOT BEEN PROVIDED
6. RESIDENTIAL UNIT LIGHTING CONTROL IS PROVIDED
7. EM SYSTEM IS CONSIDERED TO BE BATTERY PACK

PRODUCT LEGEND
LC1.2 (E3.1B)

ARP 16	ARP INTENC16 NLT 16FCR MVOLT 1VB SC SM Acuity Relay Panel, Include INT and ENC, 16-Size, nLight, 16-field configurable relays, 120-277 VAC, Screw Cover, Surface Mount
nC 10	NCM 10 RJB Low Voltage Ceiling Mount Sensor, Large Motion / Extended Range 360° Lens, Rear RJ-45 Ports
nCP 9	NCM PDT 9 RJB Low Voltage Ceiling Mount Sensor, Passive Dual Technology, Small Motion / Standard Range 360° Lens, Rear RJ-45 Ports
n TCH	NPOD TOUCH XX Low Voltage Wallpod, Touchscreen Wall Control
nS D	NPODMA DX XX nLight Wired Aesthetic Wallpod, Raise/Lower Dimming
nS	NPODMA XX nLight Wired Aesthetic Wallpod
nPD	NPP16 D EFP Power/Relay Pack, Dimming, External Fault Protection
$XP	WSXA PDT XX Wall Switch, Passive Dual Technology

42095 ZEVO DR., TEMECULA, CALIFORNIA 92590-3780
Phone: 951.296.9110 Fax: 951.296.6079 Email: stk@stkinc.com

CONSULTANT:
DESIGN WEST ENGINEERING
MECHANICAL / ELECTRICAL / ENERGY CONSULTANTS

REVIEWED FOR CODE COMPLIANCE

THESE DESIGN AND CONSTRUCTION DOCUMENTS HAVE BEEN REVIEWED AND FOUND TO BE IN SUBSTANTIAL COMPLIANCE WITH THE 2022 CALIFORNIA ENERGY CODE. THE ENFORCEMENT OF THE ENERGY CODE REQUIREMENTS IS SUBJECT TO FIELD INSPECTION AND APPROVAL BY THE BUILDING OFFICIAL HAVING JURISDICTION. THE CONTRACTOR IS RESPONSIBLE FOR CONSTRUCTING AND INSTALLING THE BUILDING AND ITS COMPONENTS IN ACCORDANCE WITH THE CODE. CONTACT THE BUILDING OFFICIAL FOR INFORMATION ABOUT FIELD INSPECTIONS AND APPROVALS.
BY: Date: 04/24/2026
REVIEWED FOR CODE COMPLIANCE
DESIGN WEST ENGINEERING
MECHANICAL / ELECTRICAL / ENERGY CONSULTANTS

REGISTERED PROFESSIONAL ENGINEER
DEREK KOZA
22839
SIGNED 04/24/2026
ELECTRICAL
STATE OF CALIFORNIA

PROJECT ADMINISTERED BY:
CITY OF PERRIS

101 NORTH "D" STREET
PERRIS, CA 92570

PROJECT NAME:
SOUTH FIRE STATION AND ADMINISTRATIVE BUILDING

PROJECT CIP: F077

2495 MURRIETA ROAD
PERRIS, CA 92585

ISSUE INFORMATION:

DATE:	INFORMATION:
11-26-25	95% CD SUBMITTAL
02-05-26	1st PC RESPONSE
02-19-26	2nd PC RESPONSE

SHEET INFORMATION:

STK PROJECT NO.: 365-03-25
SCALE: AS NOTED
DATE: NOVEMBER 2025
PLOT DATE: –
DRAWN BY: JM / JM

SEAL:

SHEET TITLE:
LIGHTING CONTROLS - FIRE STATION SEGMENT B

SHEET NO.:
E3.6

LIGHTING CONTROLS - FIRE STATION SEGMENT B | SCALE: NOT TO SCALE | 1

25-114

04/24/2026 12:48PM R:\PROJECTS\2025\25-114 perris fire station_CAD\S-114 ELg\Controls.dwg

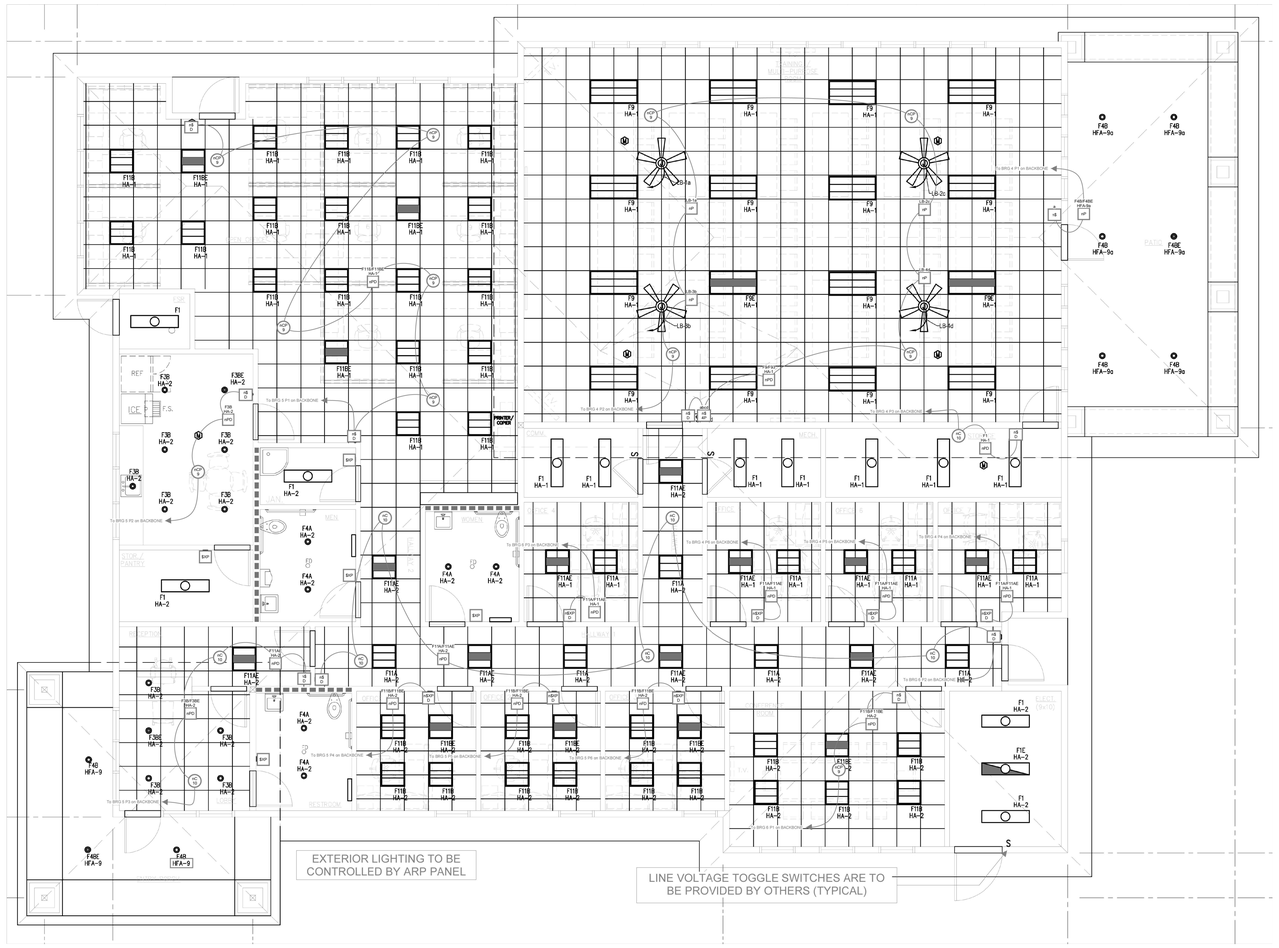

LIGHTING PLAN - ADMIN BUILDING
1/4" = 1'

PROJECT NOTES
Basis Of Design
1 THIS DESIGN IS BASED ON SHEET E1.0, E3.1, E3.1B AND E3.2, DATED 11/26/2025 (95% CD SUBMITTAL)
2 PLUG LOADS HAVE NOT BEEN PROVIDED BASED ON PLAN SET, DATED 11/26/2025 (95% CD SUBMITTAL)
3 A NETWORK SOLUTION WITH TIME-CLOCK CAPABILITIES HAS BEEN PROVIDED
4 ADR HAS BEEN PROVIDED AS THE TOTAL LIGHTING LOAD IS GREATER THAN 4,000W
5 BACNET INTEGRATION HAS NOT BEEN PROVIDED
6 RESIDENTIAL UNIT LIGHTING CONTROL IS PROVIDED
7 EM SYSTEM IS CONSIDERED TO BE BATTERY PACK

PRODUCT LEGEND LC1.3 (E3.2)	
nC 10	NCM 10 RJB Low Voltage Ceiling Mount Sensor, Large Motion / Extended Range 360° Lens, Rear RJ-45 Ports
nCP 9	NCM PDT 9 RJB Low Voltage Ceiling Mount Sensor, Passive Dual Technology, Small Motion / Standard Range 360° Lens, Rear RJ-45 Ports
n$ 4P	NPODMA 4P XX nLight Wired Aesthetic Wallpod, Four Pole
n$ D	NPODMA DX XX nLight Wired Aesthetic Wallpod, Raise/Lower Dimming
n$	NPODMA XX nLight Wired Aesthetic Wallpod
nPD	NPP16 D EFP Power/Relay Pack, Dimming, External Fault Protection
nP	NPP16 EFP Power/Relay Pack, External Fault Protection
nSXP D	NWSXA PDT LV DX XX Aesthetic Wall Switch Occupancy Sensor, Passive Dual Technology, Low Voltage, Raise/Lower Dimming
$XP	WSXA PDT XX Wall Switch, Passive Dual Technology

Disclaimer

THIS CONTROLS SYSTEM LAYOUT DIAGRAM IS NOT A PROFESSIONAL ENGINEERING DRAWING, AND IS PROVIDED ONLY FOR INFORMATIONAL PURPOSES AND TO HELP THE CUSTOMER OR END-USER (AS APPLICABLE) UNDERSTAND HOW VARIOUS CONTROLS DEVICES ARE ARRANGED AND CONNECT TO EACH OTHER. THIS CONTROLS SYSTEM LAYOUT DIAGRAM IS STRICTLY BASED ON THE INFORMATION PROVIDED TO ACUITY BRANDS, AND IS PROVIDED WITHOUT WARRANTY AS TO ACCURACY, COMPLETENESS, RELIABILITY OR OTHERWISE. IF THE INFORMATION (INCLUDING BUT NOT LIMITED TO FLOOR-PLANS, REFLECTED CEILING PLANS, ELECTRICAL PLANS AND SPECIFICATIONS) PROVIDED TO ACUITY BRANDS IS INCOMPLETE OR NOT CURRENT (I.E., NEWER VERSIONS EXIST), THE ACCURACY OF THE LAYOUT DIAGRAM MAY BE ADVERSELY AFFECTED. ONCE THIS CONTROLS SYSTEM LAYOUT DIAGRAM IS RECEIVED BY THE CUSTOMER OR END-USER (AS APPLICABLE), IT IS THE OBLIGATION OF THE CUSTOMER OR END-USER (AS APPLICABLE) TO CONSULT WITH A PROFESSIONAL ENGINEERING ADVISOR TO DETERMINE WHETHER THE PROPOSED DESIGN MEETS THE APPLICABLE PROJECT REQUIREMENTS FOR THE CONTROLS SYSTEM'S PERFORMANCE, CODE COMPLIANCE, SAFETY, SUITABILITY AND EFFECTIVENESS FOR USE IN A PARTICULAR APPLICATION. IN NO EVENT WILL ACUITY BRANDS BE RESPONSIBLE FOR ANY LOSS RESULTING FROM ANY USE OF THIS CONTROLS SYSTEM LAYOUT DIAGRAM.

STK ARCHITECTURE, INC.
42095 ZEVO DR., TEMECULA, CALIFORNIA 92590-3780
Phone: 951.296.9110 Fax: 951.296.6079 Email: stk@stkinc.com

CONSULTANT:

REVIEWED FOR CODE COMPLIANCE

THESE DESIGN AND BUILDING DOCUMENTS HAVE BEEN REVIEWED AND FOUND TO BE IN SUBSTANTIAL COMPLIANCE WITH THE APPLICABLE CODES. THIS REVIEW IS SUBJECT TO ALL LIMITATIONS CONTAINED IN THE LAWS REGULATING ARCHITECTURE IN THE STATE OF CALIFORNIA. THE RESPONSIBILITY FOR COMPLIANCE WITH THESE DOCUMENTS AND THE CODES ON THE JOB SITE REMAINS WITH THE CONTRACTOR, SUBCONTRACTORS, SUPPLIERS AND/OR THE OWNER'S REPRESENTATIVES. THE CONTRACTOR OF RECORD IS RESPONSIBLE FOR CONSTRUCTION TO COMPLY WITH ALL APPLICABLE CODES. CONSTRUCTION MUST NOT COMMENCE UNTIL ALL REQUIRED PERMITS HAVE BEEN ISSUED. REVIEW DOES NOT AUTHORIZE ANY VIOLATION OF CODES, LAWS, ORDINANCES OR REGULATIONS. REVIEWED BY: Linda Rodriguez
Date: 02/19/2026
Email: linda@designwesteng.com
BUILDING DEPARTMENT VALIDATION: Date:
BUILDING OFFICIAL:

DESIGN WEST ENGINEERING
MECHANICAL / ELECTRICAL / ENERGY CONSULTANTS
ELECTRICAL ENERGY SOLUTIONS INC.
DEPARTMENT

REGISTERED PROFESSIONAL ENGINEER
CHUCK KOZA
22839
SIGNED: 04/24/2026
ELECTRICAL
STATE OF CALIFORNIA

PROJECT ADMINISTERED BY:
CITY OF PERRIS

101 NORTH "D" STREET
PERRIS, CA 92570

PROJECT NAME:
SOUTH FIRE STATION AND ADMINISTRATIVE BUILDING

PROJECT CIP: F077

2495 MURRIETA ROAD
PERRIS, CA 92585

ISSUE INFORMATION:

DATE:	INFORMATION:
11-26-25	95% CD SUBMITTAL
02-05-26	1 1st PC RESPONSE
02-19-26	2 2nd PC RESPONSE

SHEET INFORMATION:

STK PROJECT NO.: 365-03-25
SCALE: AS NOTED
DATE: NOVEMBER 2025
PLOT DATE: –
DRAWN BY: JM / JM

SEAL:

SHEET TITLE:
LIGHTING CONTROLS - ADMINISTRATION BUILDING

SHEET NO.:
E3.7

BL_PROJECT\2025\25-114 perris fire station (CAD)\25-114 E3.vwx 12/4/2025 12:48PM

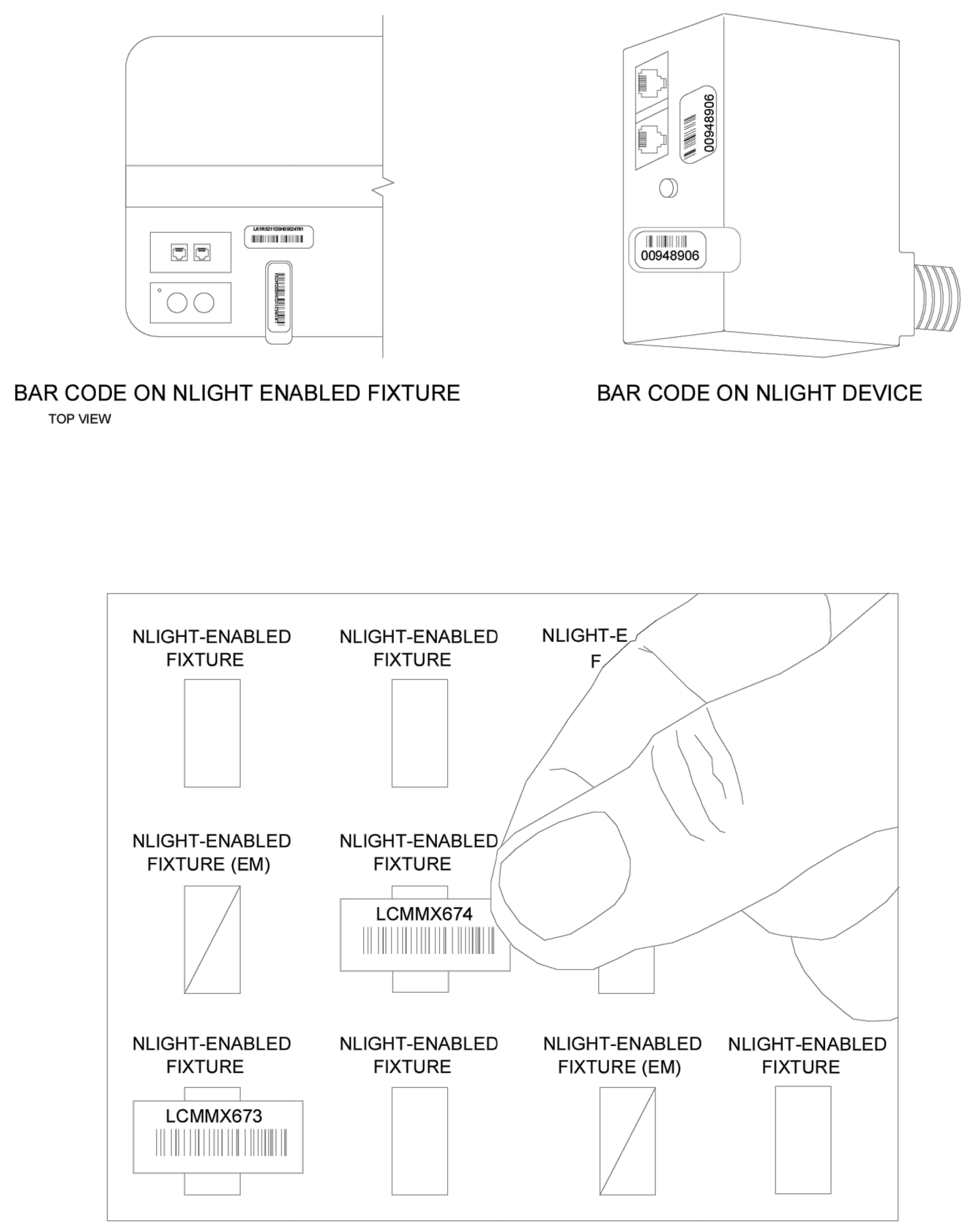

NOTES:

EVERY NLIGHT ENABLED DEVICE (INCLUDING NLIGHT EANABLED FIXTURES) IS FURNISHED WITH (1) PERMANENTLY ADHERED ID TAG AND (1) MATCHING, PARTIALLY ADHERED ID TAG TO BE PLACED ON THE RISER DIAGRAM SHEET PROVIDED AS PART OF AN NLIGHT SUBMITTAL.DURING INSTALLATION AND PRIOR TO FACTORY STARTUP, CONTRACTOR SHALL PLACE EACH ID TAG BELOW EACH CORRESPONDING DEVICE SHOWN ON RISER DIAGRAM TO FACILITATE FACTORY STARTUP. FAILURE TO COMPLY MAY RESULT IN STARTUP DELAYS AND ADDITIONAL COSTS AT THE CONTRACTOR'S EXPENSE. DO NOT PLACE DEVICE ID STICKERS ON FLOOR PLAN UNLESS REQUIRED TO EXECUTE NFLOORPLAN SERVICES, REFERENCE NFLOORPLAN SERVICE NOTES ON THIS SHEET FOR SPECIFIC REQUIREMENTS.

THE SMALL BARCODE LABELS INCLUDED WITH ALL NLIGHT DEVICES AND NLIGHT ENABLED FIXTURES MUST BE PLACED ON A PRINTED PLAN BY THE INSTALLER PRIOR TO ONSITE SYSTEM STARTUP.

THE BARCODE INDICATES THE UNIQUE ID OF EACH NLIGHT DEVICE. THIS ID IS USED DURING SYSTEM STARTUP TO PROGRAM DEVICES WITH THE CORRECT GROUPINGS AND SETTINGS. WITHOUT THIS, SYSTEM STARTUP WILL REQUIRE ADDITIONAL DAYS ON THE JOB TO LOCATE DEVICE IDS.

BARCODE INSTRUCTIONS:

1. PRINT A PLAN OF THE INSTALLATION AREA TO A MINIMUM D SIZE (24□X 36□). THE PLAN MAY BE A REFLECTED CEILING PLAN, LIGHTING PLAN, OR ELECTRICAL PLAN, SO LONG AS ALL DEVICES CAN BE LOCATED BY THE FIELD SUPPORT ENGINEER.
2. PLACE THE SMALL BARCODE LABEL (0.875□ LONG) FROM EACH LUMINAIRE AND DEVICE ON THE FLOORPLAN. THE LARGE BARCODE LABEL (1.25□ LONG) CAN BE USED ON THE OUTSIDE OF ANY HOUSING OR JUNCTION BOX THAT OBSCURES THE ID NUMBER SHOWN ON THE DEVICE ITSELF.
3. SAVE THE PLAN AT THE JOB SITE, AND HAND OVER TO ACUITY FIELD SUPPORT ENGINEER OR OTHER PERSONNEL RESPONSIBLE FOR ONSITE SYSTEM STARTUP. IT IS ALSO ACCEPTABLE TO PROVIDE THE BARCODE PLAN AS SCANNED PDF FILES, EMAILED TO YOUR LOCAL LIGHTING AGENCY. IF YOU DO NOT KNOW YOUR LOCAL LIGHTING AGENCY, PLEASE REACH OUT TO TECH SUPPORT AT 1 (800) 535-2465, OPTION 1 FOR NLIGHT. THEY WILL BE ABLE TO IDENTIFY YOUR LOCAL REP.
4. DRAW ON PLAN ANY LOCATION CHANGES FOR A FIXTURE OR DEVICES, IF DIFFERENT THAN SHOWN ON PLAN.

NLIGHT BARCODE INSTRUCTIONS

N.T.S.

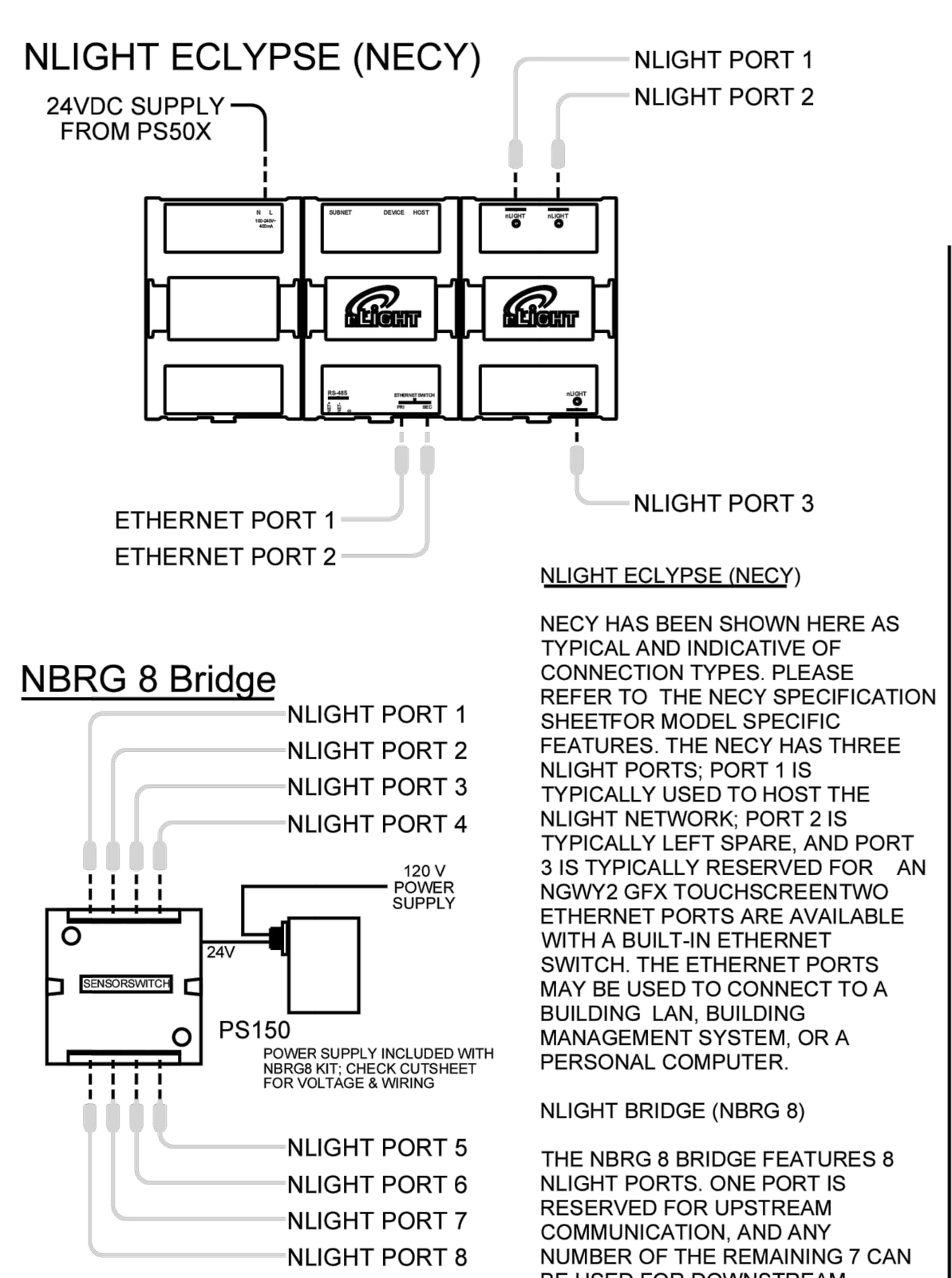

NLIGHT ECLYPSE (NECY)

NECY HAS BEEN SHOWN HERE AS TYPICAL AND INDICATIVE OF CONNECTION TYPES. PLEASE REFER TO THE NECY SPECIFICATION SHEETFOR MODEL SPECIFIC FEATURES. THE NECY HAS THREE NLIGHT PORTS; PORT 1 IS TYPICALLY USED TO HOST THE NLIGHT NETWORK; PORT 2 IS TYPICALLY LEFT SPARE, AND PORT 3 IS TYPICALLY RESERVED FOR AN NGWY2 GFX TOUCHSCREENTWO ETHERNET PORTS ARE AVAILABLE WITH A BUILT-IN ETHERNET SWITCH. THE ETHERNET PORTS MAY BE USED TO CONNECT TO A BUILDING LAN, BUILDING MANAGEMENT SYSTEM, OR A PERSONAL COMPUTER.

NLIGHT BRIDGE (NBRG 8)

THE NBRG 8 BRIDGE FEATURES 8 NLIGHT PORTS. ONE PORT IS RESERVED FOR UPSTREAM COMMUNICATION, AND ANY NUMBER OF THE REMAINING 7 CAN BE USED FOR DOWNSTREAM COMMUNICATION. ALLOWANCE OF AT LEAST ONE SPARE PORT IS TYPICAL.

SYMBOLS KEY:
S = LAN EQUIPMENT
G = NLIGHT ECLYPSE (NECY)
B = NLIGHT BRIDGE (NBRG 8)

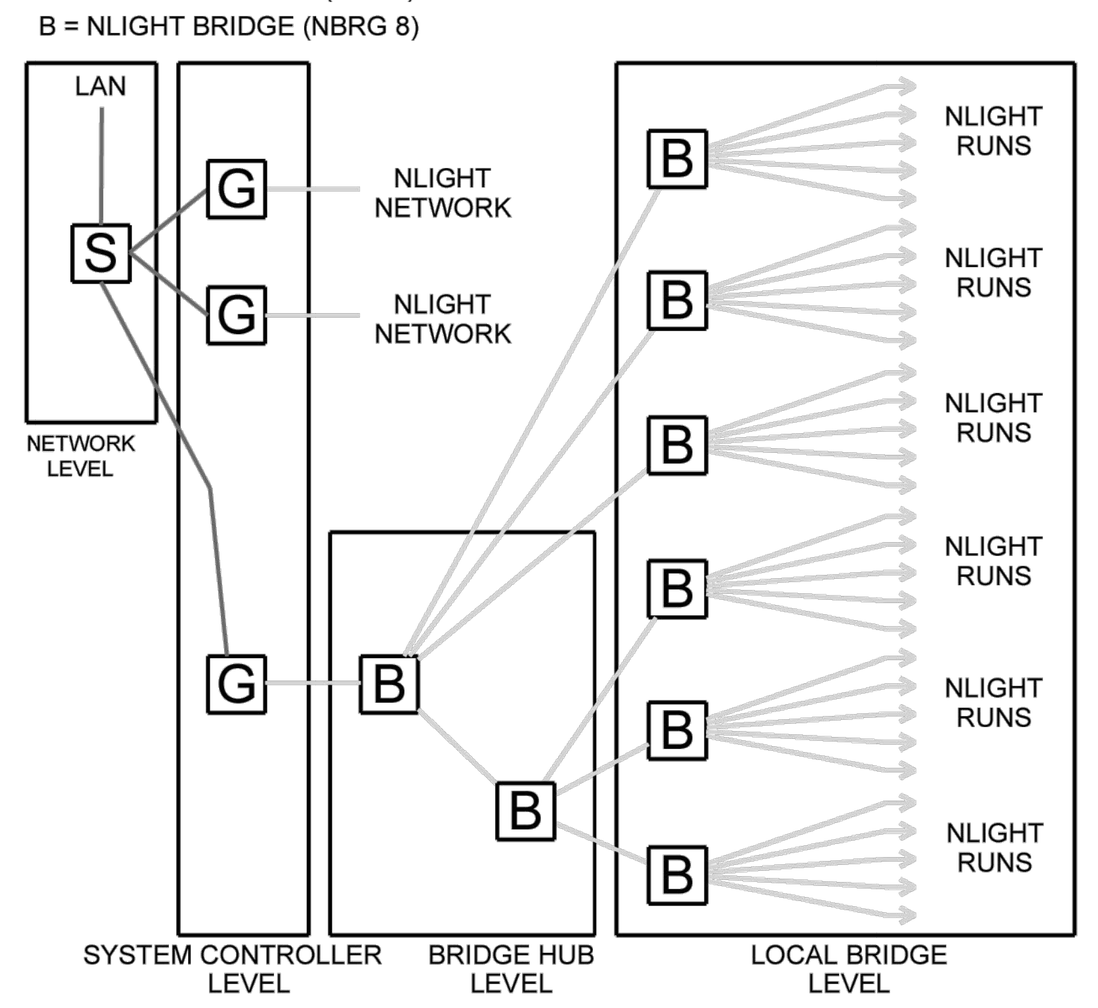

NETWORK LEVEL

ALL NLIGHT GATEWAY DEVICES (NECY) ARE CONNECTED OVER A LOCAL AREA NETWORK. COMPUTERS ON THIS LEVEL MAY CONNECT THROUGH SENSORVIEW AND BUILDING AUTOMATION SYSTEMS MAY ACCESS SYSTEM INFORMATION OVER BACNET/IP WHERE APPLICABLE AND WITH PROPER NECY OPTIONS (SEE NECY SPECIFICATION SHEET FOR MORE INFORMATION).

SYSTEM CONTROLLER LEVEL

NECY ON THIS LEVEL WILL HOST AN NLIGHT NETWORK. DEVICES ON THIS LEVEL SHOULD BE LOCATED ON THE SAME SUB NETWORK (SUBNET).

BRIDGE HUB LEVEL

NLIGHT BRIDGES ON THIS LEVEL FUNCTION AS HUBS IN A STAR TOPOLOGY. THE NLIGHT NETWORK HOSTED BY THE NECY MUST BE ROUTED TO EACH BRIDGE ON THE LOCAL BRIDGE LEVEL. EACH BRIDGE HUB WILL UTILIZE ONE PORT TO RUN UPSTREAM (TOWARDS THE NECY) AND ANY NUMBER OF THE REMAINING 7 PORTS TO FEED DOWNSTREAM RUNS (TOWARDS NLIGHT ZONE). LARGE SYSTEMS WILL OFTEN USE A TIERED APPROACH WITH BRIDGE HUBS RUNNING TO ADDITIONAL BRIDGE HUBS. IN THESE SITUATIONS, THE MAXIMUM NUMBER OF BRIDGE HUB TIERS IS 8.

LOCAL BRIDGE LEVEL

NLIGHT BRIDGES ON THIS LEVEL UTILIZE ONE PORT TO RUN UPSTREAM (TOWARDS BRIDGE HUBS) AND ANY NUMBER OF THE REMAINING 7 PORTS TO FACILITATE NLIGHT ZONES CONSISTING OF CAT5E-DAISY-CHAINED NLIGHT LIGHTING CONTROL DEVICES.

NLIGHT NETWORK RISER

N.T.S.

GENERAL NOTES:

1. IF ARP AND NECY ARE STANDALONE, TOTAL CAT5 BUS LENGTH SHOULD NOT EXCEED 1,500 FEET. IT IS RECOMMENDED THAT THE NECY AND ARP BE INSTALLED IN THE SAME LOCATION.
2. DO NOT EXCEED 128 DIGITAL DEVICES PER NLIGHT CONTROL ZONE. FOR EVERY 8 RELAYS THE NLIGHT PANEL UTILIZES 9 DEVICE ADDRESSES.
3. PROVIDE 3-#18AWG WIRES BETWEEN PHOTOCELL AND CONTROL PANEL
4. DO NOT EXCEED 750 DEVICES PER NECY, OR 1,500 FEET PER CAT5 RUN.
5. THE NECY HAS 3 NLIGHT PORTS. PORT 1 IS TYPICALLY USED TO HOST THE NLIGHT NETWORK; PORT 2 IS TYPICALLY A SPARE, AND PORT 3 IS RESERVED FOR THE NECY GFX COMMISSIONING INTERFACE.
6. TWO ETHERNET PORTS ARE AVAILABLE WITH NECY BUILT-IN ETHERNET SWITCH. THE ETHERNET PORTS MAY BE USED TO CONNECT TO A BUILDING OR BMS LAN OR A PERSONAL COMPUTER.
7. THE ARP PANEL SHOULD BE FED WITH NORMAL POWER, THIS WILL ENSURE ALL RELAYS FAIL TO ON IN THE EVENT OF NORMAL POWER LOSS.
8. AN ARPA PC SHOULD BE USED FOR SWITCHING LOADS ONLY, NOT FOR DIMMING LOADS. FOR DIMMING LOADS, SEE SPEC SHEET FOR LIST OF COMPATIBLE PHOTOCELLS.
9. CAT5 CABLE RUNS TO BE IN A DAISY CHAIN CONFIGURATION FROM THE NECY OR PANEL TO OTHER CONTROL DEVICES.
10. ONE RS-485 PORT IS AVAILABLE ON THE NECY FOR CONNECTION TO BACNET MS/TP OR SITEVIEW ENERGY METERS.

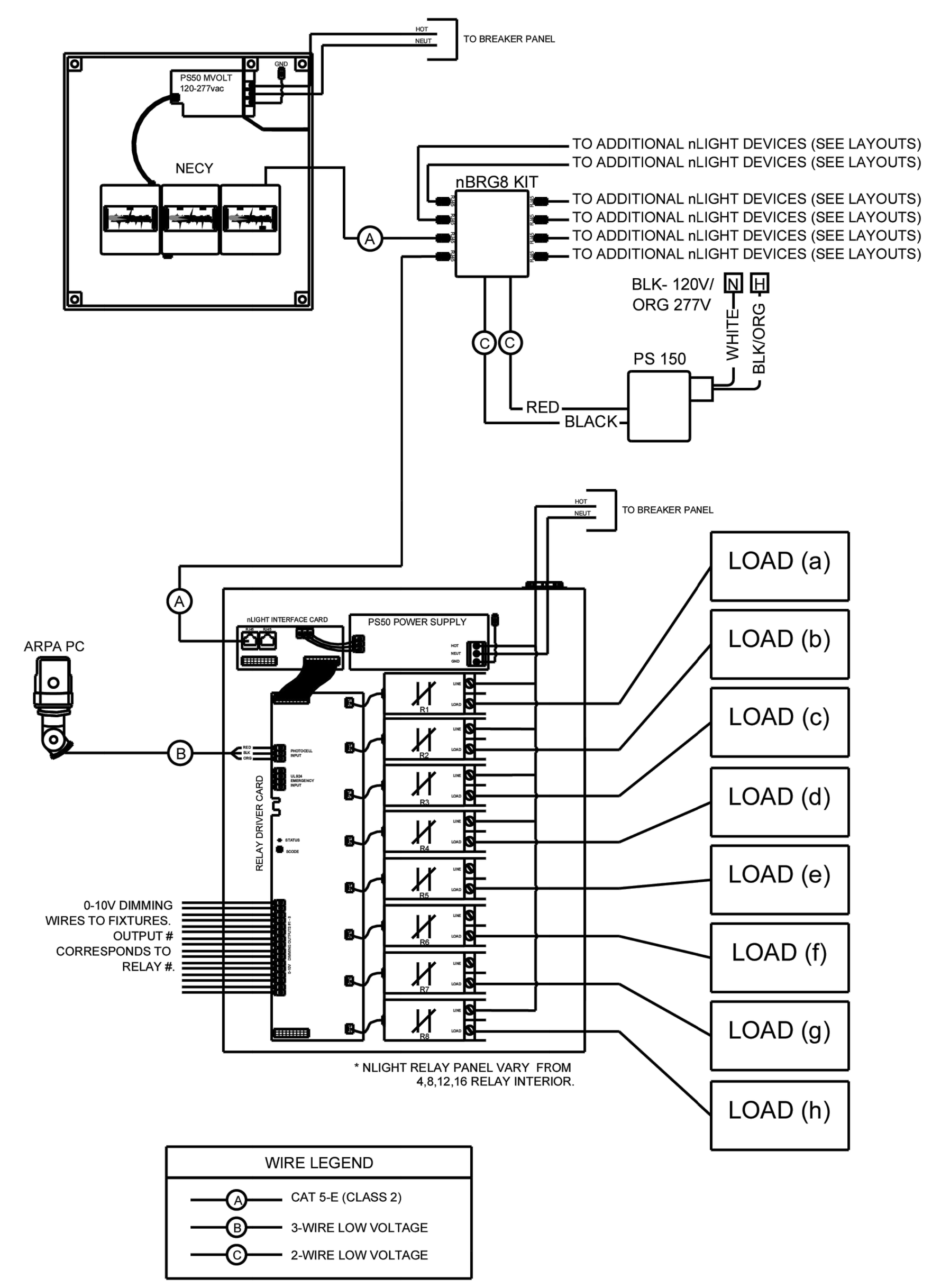

NLIGHT ARP TO NECY AND ARPA PC

N.T.S.

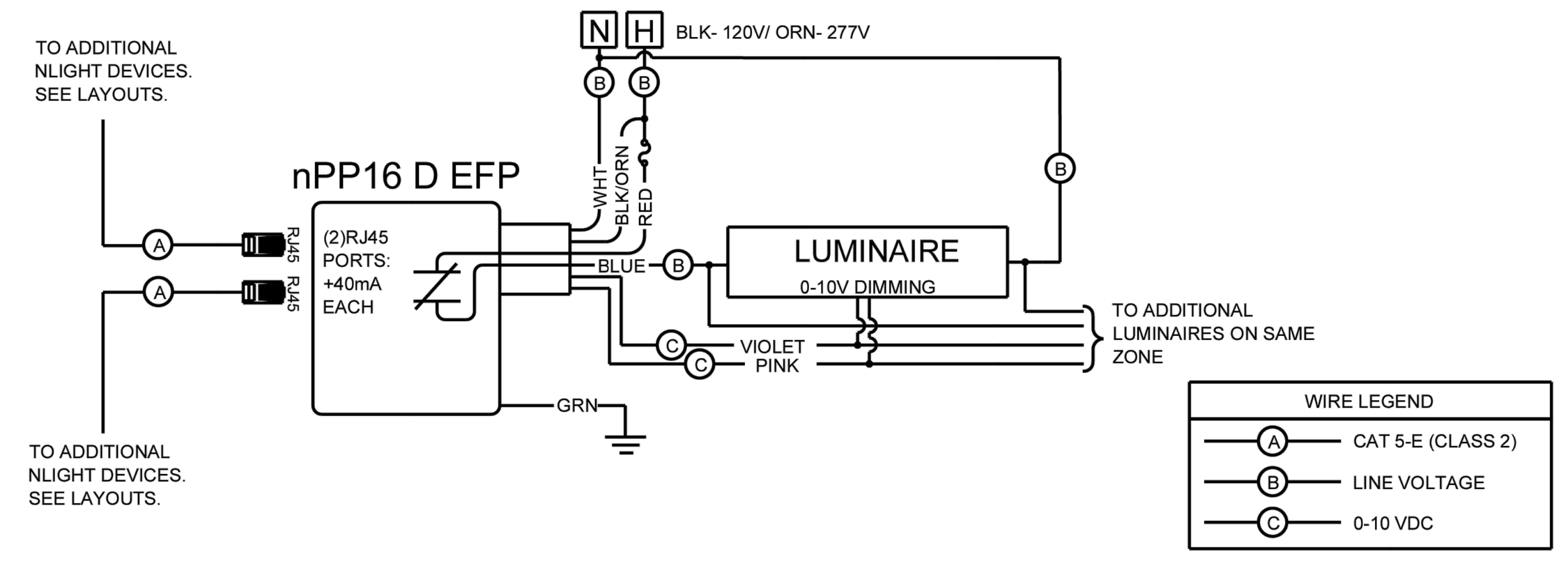

TYPICAL WIRING DIAGRAM: NPP16 D EFP

N.T.S.

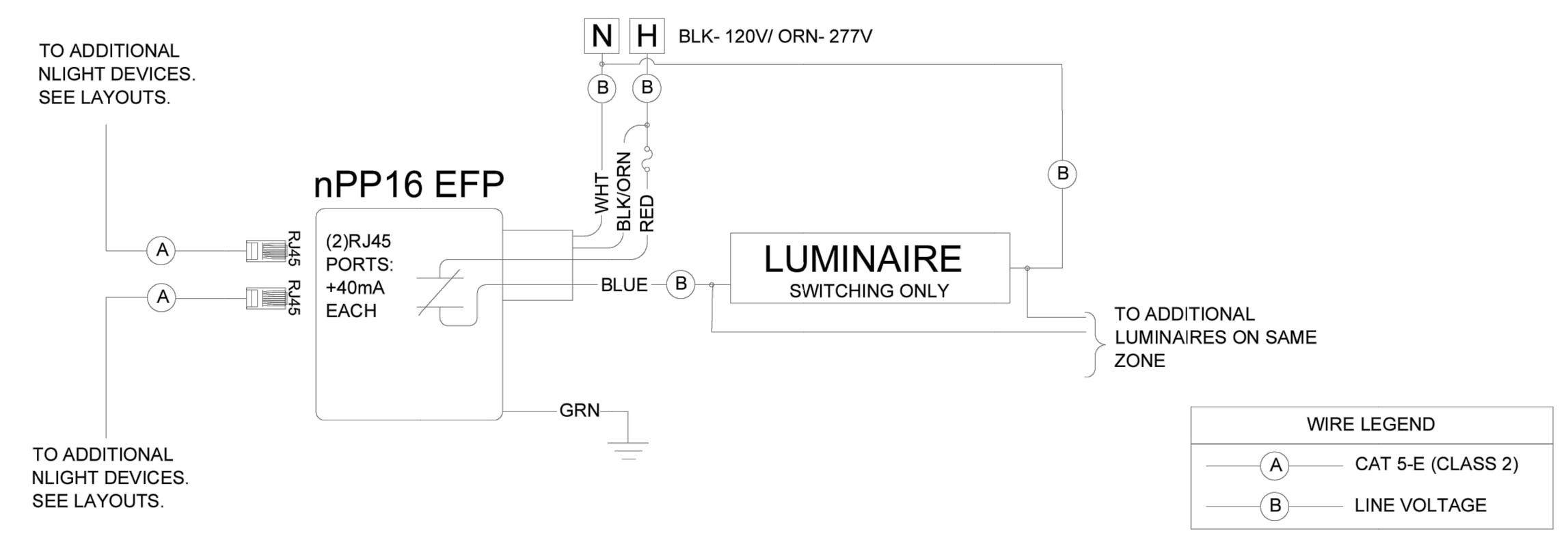

TYPICAL WIRING DIAGRAM: NPP16 EFP

N.T.S.

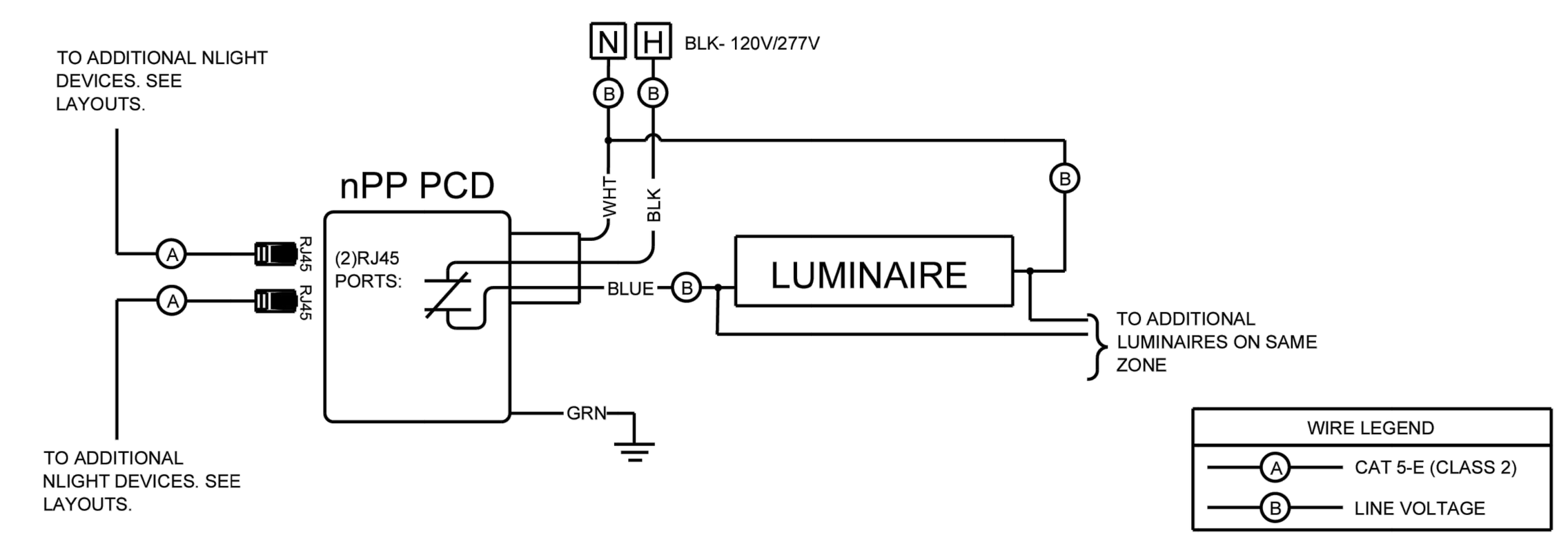

TYPICAL WIRING DIAGRAM: NPP PCD

N.T.S.

TIA / EIA-568-B CABLING STANDARD TERMINATION

Function	PAIR #	PIN OUT (T568B)	Wire Color
(T1) / (R1)	1	5 / 4	WHITE w/ BLUE / BLUE
Tx + (T2) / Tx - (R2)	2	1 / 2	WHITE w/ ORANGE / ORANGE
Rx + (T3) / Rx - (R3)	3	3 / 6	WHITE w/ GREEN / GREEN
(T4) / (R4)	4	7 / 8	WHITE w/ BROWN / BROWN

TERMINATION & TESTING OF CAT5 CABLES MUST BE DONE BY A QUALIFIED NETWORK INSTALLER

Cable termination requirements :

1. Strip off outer jacket - approximately 1-1/2" (37.6 mm)
2. Terminate approximately 1/2" (12.2 mm) from end of conductors on type 110 punch down block or connector per schedule (t568b) - maximum untwist of conductors to terminations is 1/2" (12.2 mm) - trim excess leads.

SEE SYSTEM SPECIFIC NOTES ON SHEET LC0.1 FOR MAXIMUM CABLE LENGTHS.

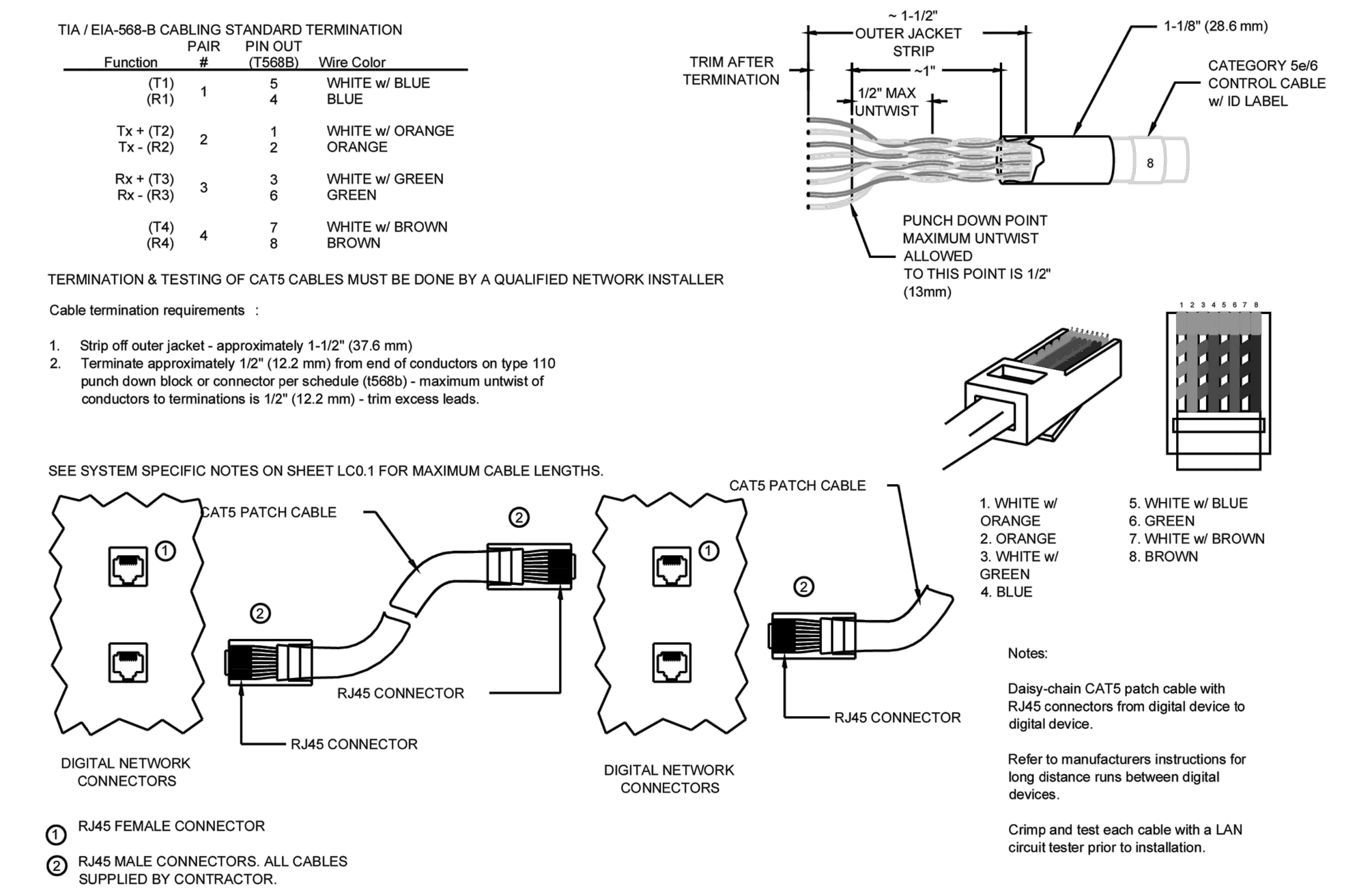

① RJ45 FEMALE CONNECTOR
② RJ45 MALE CONNECTORS. ALL CABLES SUPPLIED BY CONTRACTOR.

Notes:

Daisy-chain CAT5 patch cable with RJ45 connectors from digital device to digital device.

Refer to manufacturers instructions for long distance runs between digital devices.

Crimp and test each cable with a LAN circuit tester prior to installation.

CAT5E/6 CABLE TERMINATION

N.T.S.

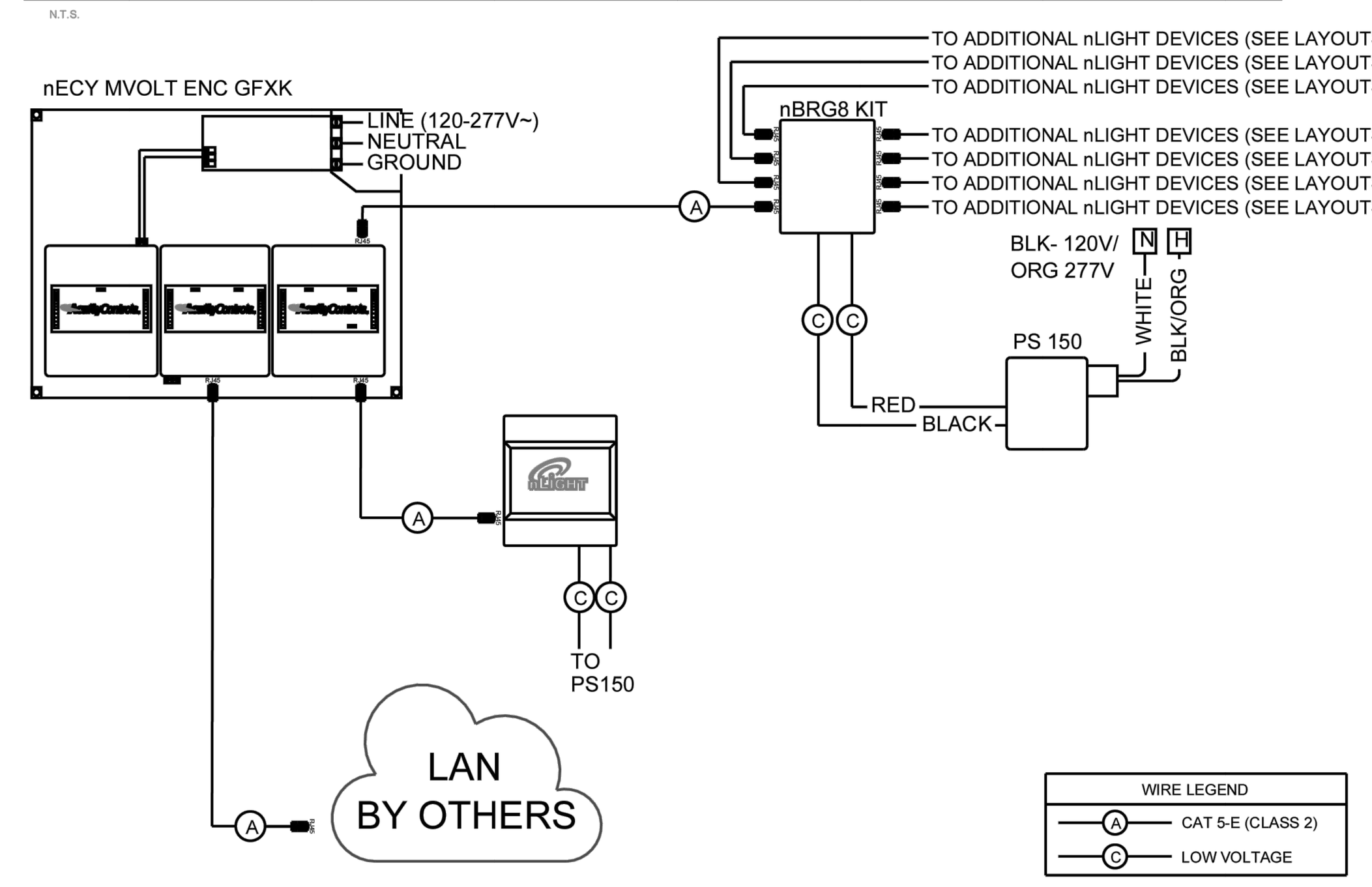

TYPICAL WIRING DIAGRAM: nECY MVOLT ENC GFXK

N.T.S.

OVERALL BILL OF MATERIAL

PRODUCT LEGEND
BACKBONE, LC1.0 (E1.0), LC1.1 (E3.1A), LC1.2 (E3.1B), LC1.3 (E3.2)

Symbol	Description
ARP 16	ARP INTENC16 NLT 16FCR MVOLT 1VB SC SM Acuity Relay Panel, Include INT and ENC, 16-Size, nLight, 16-field configurable relays, 120-277 VAC, Screw Cover, Surface Mount
LAN	LAN Local Area Network (LAN) connection is assumed to be provided by others or present at this location. All networked devices connecting to the LAN should be on the same subnet.
nBG	NBRG 8 KIT Bridge, Kit
nC 10	NCM 10 RJB Low Voltage Ceiling Mount Sensor, Large Motion / Extended Range 360° Lens, Rear RJ-45 Ports
nCP 9	NCM PDT 9 RJB Low Voltage Ceiling Mount Sensor, Passive Dual Technology, Small Motion / Standard Range 360° Lens, Rear RJ-45 Ports
nECY AGN	NECY MVOLT ADR ENC NW GFXK nLight Eclypse, 120-277V, OpenADR, Enclosure for nLight ECLYPSE, No Wi-Fi, nGWY2 GFX and PS 150 Power Supply
nIO BT	NIO BT nLight Device, Bluetooth low energy communication module
n TCH	NPOD TOUCH XX Low Voltage Wallpod, Touchscreen Wall Control
n$ 2PD	NPODMA 2P DX XX nLight Wired Aesthetic Wallpod, 2-Pole, Raise/Lower Dimming
n$ 2P	NPODMA 2P XX nLight Wired Aesthetic Wallpod, 2-Pole
n$ 4P	NPODMA 4P XX nLight Wired Aesthetic Wallpod, Four Pole
n$ D	NPODMA DX XX nLight Wired Aesthetic Wallpod, Raise/Lower Dimming
n$	NPODMA XX nLight Wired Aesthetic Wallpod
nPP PCD	NPP PCD EFP NPP series fuses, Phase Control Dimming, External Fault Protection
nPD	NPP16 D EFP Power/Relay Pack, Dimming, External Fault Protection
nP	NPP16 EFP Power/Relay Pack, External Fault Protection
n$XP D	NWSXA PDT LV DX XX Aesthetic Wall Switch Occupancy Sensor, Passive Dual Technology, Low Voltage, Raise/Lower Dimming
WPD	WPD XX Wall Phase Dimmer
$XP 2P	WSXA PDT 2P XX Wall Switch, Passive Dual Technology, 2-Pole
$XP	WSXA PDT XX Wall Switch, Passive Dual Technology

DESIGN BASED ON SHEET E1.0, E3.1, E3.1B AND E3.2, DATED 11/26/2025 (95% CD SUBMITTAL)

CRITICAL NOTES (PLEASE READ)

BASIS OF DESIGN
*THIS DESIGN IS BASED ON SHEET E1.0, E3.1, E3.1B AND E3.2, DATED 11/26/2025 (95% CD SUBMITTAL)
*PLUG LOADS HAVE NOT BEEN PROVIDED BASED ON PLAN SET, DATED 11/26/2025 (95% CD SUBMITTAL)
*A NETWORK SOLUTION WITH TIME-CLOCK CAPABILITIES HAS BEEN PROVIDED
*ADR HAS BEEN PROVIDED AS THE TOTAL LIGHTING LOAD IS GREATER THAN 4,000W
*BACNET INTEGRATION HAS NOT BEEN PROVIDED
*RESIDENTIAL UNIT LIGHTING CONTROL IS PROVIDED
*EM SYSTEM IS CONSIDERED TO BE BATTERY PACK

PROJECT SPECIFIC NOTES
*EACH BUILDING HAS BEEN PROVIDED WITH AN INDIVIDUAL TIME-CLOCK. IF A SINGLE TIMECLOCK IS REQUIRED FOR THE SITE, PLEASE VERIFY IF CONDUIT IS AVAILABLE TO INTERCONNECT BUILDINGS VIA CAT5.
*ASTRONOMICAL TIME CLOCK HAS BEEN PROVIDED FOR TIMECLOCK CAPABILITIES. OUTDOOR PHOTOCELL NOT INCLUDED. OUTDOOR PHOTOCELL AVAILABLE UPON REQUEST.

HVAC INTEGRATION
*EXHAUST FAN CONTROLS IN RESTROOMS ARE NOT PROVIDED. IF REQUIRED, PLEASE SPECIFY AND NOTE THAT THE FAN IS LIMITED TO 1/2HP.
*HVAC INTEGRATION HAS NOT BEEN PROVIDED, PLEASE VERIFY IF REQUIRED.

ALTERNATE SOLUTION TO SPECIFIED DESIGN (TO BE APPROVED)
*MULTI-GANG WALL SWITCHES HAVE BEEN CONSOLIDATED INTO A SINGLE GANG WALLPOD, PLEASE VERIFY IF THIS IS AN ACCEPTABLE SOLUTION.

THIS DESIGN IS SUBJECT TO CHANGE DEPENDING ON
*COMPLETE SET OF ELECTRICAL DOCUMENTS (DRAWINGS AND SPECIFICATIONS) NOT PROVIDED AT TIME OF LAYOUT/QUOTE REQUEST. VERIFY THIS LAYOUT/QUOTE MEETS PROJECT'S SPECIFIC REQUIREMENTS SUCH AS, BUT NOT LIMITED TO, STARTUP DAYS, SPARE PARTS, WARRANTY PERIOD, GRAPHIC PAGES, ETC. PRIOR TO PLACING BID WITH CONTRACTOR.
*SEQUENCE OF OPERATION
*FIXTURE SUBMITTAL INDICATING DIMMING TYPES
*UPDATED ELECTRICAL SET WITH CHANGES TO LIGHTING AND POWER CIRCUITING
*ENGINEER/CONTRACTOR'S REVIEW. PLEASE PROVIDE FULL INFORMATION AND ASK FOR A REVISED B.O.M.
*PROJECT SPECIFICATION DOCUMENTS

EMERGENCY SYSTEM
*EM SYSTEM IS CONSIDERED TO BE BATTERY PACK.

OCCUPANCY SENSOR NOTES
*ADDITIONAL SENSORS ARE PROVIDED FOR 90% COVERAGE.
*SENSOR PLACEMENT AND QUANTITY ARE ESTIMATED. IF EXACT NUMBER AND LOCATION ARE REQUIRED, PLEASE PROVIDE FURNITURE PLANS.
*SENSOR PLACEMENTS ARE FOR REFERENCE ONLY, SENSOR PLACEMENTS CAN BE ADJUSTED IN FIELD WITHIN A TOLERANCE OF 2-3 FT. BASED ON CEILING CONDITIONS.
*ADDITIONAL OCCUPANCY SENSORS MAY BE USED IN ROOMS WHERE THERE IS A HIGHER CHANCE OF FALSE TRIGGERS.

PLUGLOAD
*PLUG LOADS HAVE BEEN EXCLUDED FROM THIS DESIGN. IF PLUG LOADS ARE REQUIRED PROVIDE POWER PLANS INDICATING CONTROLLED RECEPTACLES AND REQUEST A REVISED DESIGN.

SYSTEMS AND COMPONENTS TO BE PROVIDED BY OTHERS
*ALL CAT5 CABLE SHOWN IN THIS DESIGN IS TO BE SUPPLIED BY OTHERS. CONTRACTOR TO VERIFY LENGTH AND QUANTITY PRIOR TO PLACING ORDER.
*LINE VOLTAGE TOGGLE SWITCHES TO BE PROVIDED BY OTHERS
*WEATHERPROOF AND OUTDOOR RATED SWITCH ENCLOSURE AND PANEL ENCLOSURE TO BE PROVIDED BY OTHERS
*ALL ENCLOSURES THAT REQUIRE GREATER THAN NEMA 1 RATING TO BE PROVIDED BY OTHERS
*RESIDENTIAL UNIT LIGHTING CONTROL IS NOT PROVIDED AS IT IS TO BE PROVIDED BY OTHERS. IF REQUIRED, PLEASE PROVIDE SEQUENCE OF OPERATION AND REQUEST REVISED DESIGN.

FIXTURE DIMMING NOTES
*PLEASE PROVIDE AN APPROVED FIXTURE SUBMITTAL PRIOR TO RELEASING CONTROLS AS DIMMING STYLES NEED TO BE VERIFIED
*POWER PACKS ARE PROVIDED BASED ON THE FOLLOWING FIXTURE DIMMING SYSTEMS.
**2W (ELV 120V - REVERSE PHASE): F2A AND F2B
*ALL OTHER FIXTURES ARE ASSUMED TO BE 0-10V.

DAYLIGHT HARVESTING
*DAYLIGHT HARVESTING IS NOT PROVIDED. PLANS DO NOT INDICATE FIXTURES IN THE PRIMARY DAYLIGHT ZONE TO HAVE A TOTAL WATTAGE GREATER THAN 120W, IF LUMEN PACKAGES ARE REVISED INCREASING FIXTURE WATTAGE AND/OR DAYLIGHT HARVESTING IS REQUIRED PLEASE SPECIFY DAYLIGHT ZONES AS WELL AS FIXTURE WATTAGE AND REQUEST A REVISED DESIGN.

DEMAND RESPONSE
*AUTOMATIC DEMAND RESPONSE HAS BEEN PROVIDED.

PROGRAMMING AND 3RD PARTY INTEGRATION
*LIGHTING CONTROL SYSTEM SHALL HAVE ON SITE START-UP PERFORMED BY THE MANUFACTURER'S TRAINED TECHNICIAN. CONTRACTOR SHALL COORDINATE WITH MANUFACTURER FOR START-UP REQUIREMENTS.
*INTEGRATION WITH BUILDING AUTOMATION SYSTEMS HAS NOT BEEN PROVIDED VIA BACNET-IP, MODBUS, CONTACT CLOSURE.
*GRAPHICAL PAGES NOT INCLUDED

NLIGHT WIRED SPECIFIC NOTES
*THE SYSTEM IS FULLY NETWORKED BY ECLYPSE CONTROLLER AND BRIDGES, AND OFFERS CENTRALIZED TIME CLOCK PROGRAMMING AND CONTROL CAPABILITIES.
*LOCATION OF ECLYPSE CONTROLLER AND BRIDGES TO BE DETERMINED BY THE CONTRACTOR BASED ON FIELD CONDITIONS. CAT5 BETWEEN EACH BRIDGE CONNECTION CANNOT EXCEED 1500 FT.
*BRIDGES, RELAYS, POWER PACKS, WALLPODS, AND SENSORS ON DRAWINGS WERE PLACED WITH INFORMATION PROVIDED AT TIME OF DESIGN. ADDITIONAL BRIDGES AND/OR SENSORS MAY BE REQUIRED DEPENDING ON BUILDING CHANGES, FINAL PARTITION HEIGHT/PLACEMENT, FURNITURE PLACEMENT, EQUIPMENT HEIGHT/PLACEMENT AND SHELVING HEIGHT/PLACEMENT.
*BACKBONE DIAGRAM IS SHOWN FOR REFERENCE ONLY, ALL DEVICES ASSOCIATED WITH THE NETWORK BACKBONE ARE TO BE INSTALLED AS SITE CONDITIONS DICTATE.
*A LIGHTING ZONE CANNOT EXCEED 1500 FT. IN CAT5. IF EXCEEDING THIS LENGTH, THE ZONE WILL NEED TO BE BROKEN INTO SMALLER ZONES AND MAY REQUIRED ADDITIONAL MATERIAL AND/OR GLOBAL CHANNEL PROGRAMMING TO MEET THE SPECIFIED SEQUENCE OF OPERATIONS.
*THE LAYOUT OF THE NETWORK BACKBONE (BRIDGES AND ECLYPSES) HAS BEEN PLACED IN A SEPARATE TREE DIAGRAM AND NOT ON THE ACTUAL LAYOUT. FINAL PLACEMENT OF BRIDGE(S) AND ECLYPSE(S) DEVICES SHALL BE AT THE CONTRACTOR/ENGINEER DISCRETION.
*POWER PACK PLACEMENT ON DRAWINGS IS FOR REFERENCE ONLY; FINAL PLACEMENT IS AT THE DISCRETION OF CONTRACTOR/ENGINEER.
*COORDINATE INSTALL LOCATIONS WITH PERFORMANCE LIGHTING SYSTEMS AND RECHECK COUNTS TO VERIFY THE NUMBER OF RELAYS NEEDED TO SWITCH ALL DESIRED LOADS.
*NIO BT (BLUETOOTH) MODULES HAVE BEEN PROVIDED FOR ON-SITE COMMISSIONING.

CRITICAL NOTES

3/32" = 1'

STK ARCHITECTURE, INC.
42095 ZEVO DR., TEMECULA, CALIFORNIA 92590-3780
Phone: 951.296.9110 Fax: 951.296.6079 Email: stk@stkinc.com

CONSULTANT:

DESIGN WEST ENGINEERING
MECHANICAL • ELECTRICAL • ENERGY CONSULTANTS
Email: code@designwesteng.com

REVIEWED FOR CODE COMPLIANCE
BUILDING BUREAU SOLUTIONS INC.

REGISTERED PROFESSIONAL ENGINEER BRADEN KEMP 22839 SIGNED:04/24/2026 ELECTRICAL STATE OF CALIFORNIA

PROJECT ADMINISTERED BY:
CITY OF PERRIS

101 NORTH "D" STREET
PERRIS, CA 92570

PROJECT NAME:
SOUTH FIRE STATION AND ADMINISTRATIVE BUILDING

PROJECT CIP: F077

2495 MURRIETA ROAD
PERRIS, CA 92585

ISSUE INFORMATION:

DATE:	INFORMATION:
11-26-25	95% CD SUBMITTAL
02-05-26	△1 1st PC RESPONSE
02-19-26	△2 2nd PC RESPONSE

SHEET INFORMATION:
STK PROJECT NO.: 365-03-25
SCALE: AS NOTED
DATE: NOVEMBER 2025
PLOT DATE: –
DRAWN BY: JM / JM

SEAL:

SHEET TITLE:
LIGHTING CONTROL DETAILS

SHEET NO.:
E3.8

LIGHTING CONTROL DETAILS 1

04/24/2026 12:44PM R:_PROJECT\2025\25-114 perris fire station_CAD\25-114 E-LtgCntrls.dwg

25-114

Schedule

Symbol	Label	QTY	Catalog Number	Description	Lamp	Lumens per Lamp	LLF	Wattage
‖	F1	21	BLWP4 40L ADSM LP835	BLWP 4ft 4000 Nominal Lumens, Curved Smooth lens, 3500K CCT, 80CRI		4040	0.9	34.54
|	F2A	2	UPLD 22IN SWW4 90CRI	Swivel LED Undercabinet, 22inch, Switchable, 90CRI		831	0.9	11.4
|	F2B	2	UPLD 30IN SWW4 90CRI	Swivel LED Undercabinet, 30inch, Switchable, 90CRI		1106	0.9	15.3
◯	F3A	43	IVO6S D 15LM 35K 80CRI MWD P AR LSS	IVO6 Round Shallow Downlight 1500 Lumens 35K 80CRI Medium Wide Open Reflector Clear Semi Specular		1541	0.9	13.32
◯	F3B	13	IVO6S D 07LM 35K 80CRI MD P AR LSS	IVO6 Round Shallow Downlight 700 Lumens 35K 80CRI Medium Open Reflector Clear Semi Specular		830	0.9	7.48
◯	F4A	12	IVO6S D 15LM 35K 90CRI MWD P AR LSS	IVO6 Round Shallow Downlight 1500 Lumens 35K 90CRI Medium Wide Open Reflector Clear Semi Specular		1313	0.9	13.32
◯	F4B	13	IVO6S D 20LM 35K 80CRI WD P AR LSS	IVO6 Round Shallow Downlight 2000 Lumens 35K 80CRI Wide Open Reflector Clear Semi Specular		2068	0.9	17.52
|	F5	20	CSVT L96 12000LM MVOLT 4000K 80CRI	Contractor Select LED Vapor Tite, 96", 12000LM, 120-277V,4000K, 80 CRI		12425	0.9	103
‖	F6	5	VAP 4000LM FST WD 40K 90CRI	VAP LED with BLT Gen 2 Boards		3348	0.9	32.9
◯	F7	6	EVO6SH 35/20 DFF SQ	EVO 6IN SHOWER, 3500K, 2000LM, FLUSH SQUITE, 80CRI		1693	0.9	24.7
|	F8	11	6857	TUBLED 55 MM	LED	403	0.9	7
▯	F9	10	STAKP 2X4 4000LM 90CRI 35K COLT MVOLT	High Efficiency Recessed Center Element LED Lay in, 2ft X 4ft, 4000 Nominal Lumens, 90 CRI, 3500K, Curved Opal Lens with Trim Rings, 120-277V		3599	0.9	30.29
◯	F10	3	FCARP-12-D-HLO-SWW4-80 -800-30	20210607-16-05-18-TRONKI 12 DR GT-V3		800	0.9	10.58
□	F11A	4	STAKP 2X2 3000LM 90CRI 35K COLT MVOLT	High Efficiency Recessed Center Element LED Lay in, 2ft X 2ft, 3000 Nominal Lumens, 90 CRI, 3500K, Curved Opal Lens with Trim Rings, 120-277V		2729	0.9	22.66
◯	F12	24	RB4S SWW5 MW MS 3000K	4 inch SOLT Switchable White LED Trim Downlight Smooth	Kit	617	0.9	7.2

Statistics

Description	Symbol	Avg	Max	Min	Max/Min	Avg/Min
APP BAY SIDE ENTRANCE	+	23.7 fc	25.6 fc	22.6 fc	1.1:1	1.0:1
APPARATUS BAY	+	47.8 fc	54.4 fc	30.9 fc	1.8:1	1.5:1
BATH 1	+	45.4 fc	55.9 fc	27.5 fc	2.0:1	1.7:1
BATH 2	+	44.7 fc	55.5 fc	26.9 fc	2.1:1	1.7:1
BATH 3	+	45.0 fc	55.7 fc	26.8 fc	2.1:1	1.7:1
BATH 4	+	43.4 fc	54.4 fc	25.2 fc	2.2:1	1.7:1
BATH 5	+	46.2 fc	56.5 fc	28.5 fc	2.0:1	1.6:1
BC BATH	+	46.0 fc	57.6 fc	30.8 fc	1.9:1	1.5:1
BC ENTRY	+	24.2 fc	27.0 fc	21.6 fc	1.3:1	1.1:1
BC QUARTERS	+	17.1 fc	22.3 fc	12.0 fc	1.9:1	1.4:1
COMM. ROOM	+	58.0 fc	61.9 fc	54.8 fc	1.1:1	1.1:1
DAYROOM	+	35.3 fc	42.0 fc	25.1 fc	1.7:1	1.4:1
DINING ROOM	+	46.4 fc	56.2 fc	34.3 fc	1.6:1	1.4:1
DINING ROOM TABLE	+	56.4 fc	67.8 fc	40.6 fc	1.7:1	1.4:1
ELECTRICAL ROOM	+	35.5 fc	42.4 fc	28.6 fc	1.5:1	1.2:1
EXERCISE ROOM	+	37.1 fc	43.2 fc	27.9 fc	1.5:1	1.3:1
FSR	+	40.0 fc	41.4 fc	38.8 fc	1.1:1	1.0:1
HALLWAY 2	+	31.5 fc	40.2 fc	20.7 fc	1.9:1	1.5:1
HALLWAY 3	+	35.7 fc	46.0 fc	23.2 fc	2.0:1	1.5:1
HALLWAY 3 ENTRY	+	23.7 fc	25.6 fc	22.6 fc	1.1:1	1.0:1
ICE MACHINE	+	8.5 fc	8.8 fc	8.1 fc	1.1:1	1.0:1
JANITOR	+	36.5 fc	38.0 fc	34.4 fc	1.1:1	1.1:1
KITCHEN	+	57.5 fc	82.9 fc	30.6 fc	2.7:1	1.9:1
LAUNDRY	+	51.8 fc	56.0 fc	48.1 fc	1.2:1	1.1:1
LOBBY	+	45.4 fc	49.2 fc	41.7 fc	1.2:1	1.1:1
MAIN ENTRY	+	20.1 fc	24.8 fc	7.1 fc	3.5:1	2.8:1
MECHANICAL	+	52.2 fc	56.5 fc	48.5 fc	1.2:1	1.1:1
MEDICAL STORAGE	+	56.7 fc	60.6 fc	53.4 fc	1.1:1	1.1:1
OFFICE 1	+	39.9 fc	44.9 fc	35.7 fc	1.3:1	1.1:1
OFFICE 2	+	37.8 fc	41.9 fc	34.6 fc	1.2:1	1.1:1
OFFICE 3	+	37.8 fc	41.9 fc	34.6 fc	1.2:1	1.1:1
PANTRY	+	28.4 fc	30.9 fc	26.2 fc	1.2:1	1.1:1
PATIO	+	35.8 fc	45.8 fc	20.0 fc	2.3:1	1.8:1
RESTROOM	+	23.0 fc	29.3 fc	18.8 fc	1.6:1	1.2:1
RESTROOM APP BAY	+	25.7 fc	31.6 fc	22.6 fc	1.4:1	1.1:1
SLEEP QUARTERS 1	+	14.1 fc	18.7 fc	10.7 fc	1.7:1	1.3:1
SLEEP QUARTERS 2	+	14.1 fc	18.7 fc	10.7 fc	1.7:1	1.3:1
SLEEP QUARTERS 3	+	14.1 fc	18.7 fc	10.7 fc	1.7:1	1.3:1
SLEEP QUARTERS 4	+	14.1 fc	18.7 fc	10.7 fc	1.7:1	1.3:1
SLEEP QUARTERS 5	+	13.7 fc	18.8 fc	10.0 fc	1.9:1	1.4:1
SLEEP QUARTERS 6	+	14.1 fc	18.7 fc	10.7 fc	1.7:1	1.3:1
SLEEP QUARTERS 7	+	14.1 fc	18.7 fc	10.7 fc	1.7:1	1.3:1
SLEEP QUARTERS 8	+	13.7 fc	18.9 fc	10.7 fc	1.8:1	1.3:1
SLEEP QUARTERS 9	+	13.8 fc	18.6 fc	10.7 fc	1.7:1	1.3:1
TURN OUT GEAR ROOM	+	45.3 fc	52.6 fc	36.4 fc	1.4:1	1.2:1
UTILITY	+	33.7 fc	40.0 fc	24.5 fc	1.6:1	1.4:1

STK ARCHITECTS, INC.
42095 ZEVO DR. TEMECULA, CALIFORNIA 92590-3780
Phone: 951.296.9110 Fax: 951.296.6079 Email: stk@stkinc.com

CONSULTANT:

REVIEWED FOR CODE COMPLIANCE

THESE DRAWINGS AND DOCUMENTS SHALL BE REVIEWED AND FOUND TO BE IN COMPLIANCE WITH THE 2022 CALIFORNIA BUILDING CODE BEFORE THEY ARE CONSIDERED VALID AND ANY CONSTRUCTION WORK PERFORMED PRIOR TO THIS REVIEW SHALL BE DONE AT THE CONTRACTOR'S OWN RISK. THE CONTRACTOR SHALL NOTIFY THE BUILDING OFFICIAL WHEN THE WORK IS READY FOR INSPECTION. IT IS THE CONTRACTOR'S RESPONSIBILITY TO MAKE SURE THAT THE APPROVED PLANS AND DOCUMENTS ARE AVAILABLE ON THE JOB SITE AT ALL TIMES FOR REFERENCE BY INSPECTION PERSONNEL.

DESIGN WEST ENGINEERING
MECHANICAL • ELECTRICAL • ENERGY CONSULTANTS
FUTURE ENERGY SOLUTIONS INC.

REGISTERED PROFESSIONAL ENGINEER
ERIC KOZA
22839
SIGNED 04/24/2026
ELECTRICAL
STATE OF CALIFORNIA

PROJECT ADMINISTERED BY:

CITY OF PERRIS

101 NORTH "D" STREET
PERRIS, CA 92570

PROJECT NAME:

SOUTH FIRE STATION AND ADMINISTRATIVE BUILDING

PROJECT CIP: F077

2495 MURRIETA ROAD
PERRIS, CA 92585

ISSUE INFORMATION:

DATE:	INFORMATION:
11-26-25	95% CD SUBMITTAL
02-05-26	1st PC RESPONSE
02-19-26	2nd PC RESPONSE

SHEET INFORMATION:

STK PROJECT NO.: 365-03-25
SCALE: AS NOTED
DATE: NOVEMBER 2025
PLOT DATE: –
DRAWN BY: JM / JM

SEAL:

SHEET TITLE:

FIRE STATION PHOTOMETRY - NORMAL SEG A

SHEET NO.:

E4.1

25-114

M:\PROJECTS\2025\25-114 perris fire station_CAD\25-114 E-P1.dwg 04/24/2026 12:48PM

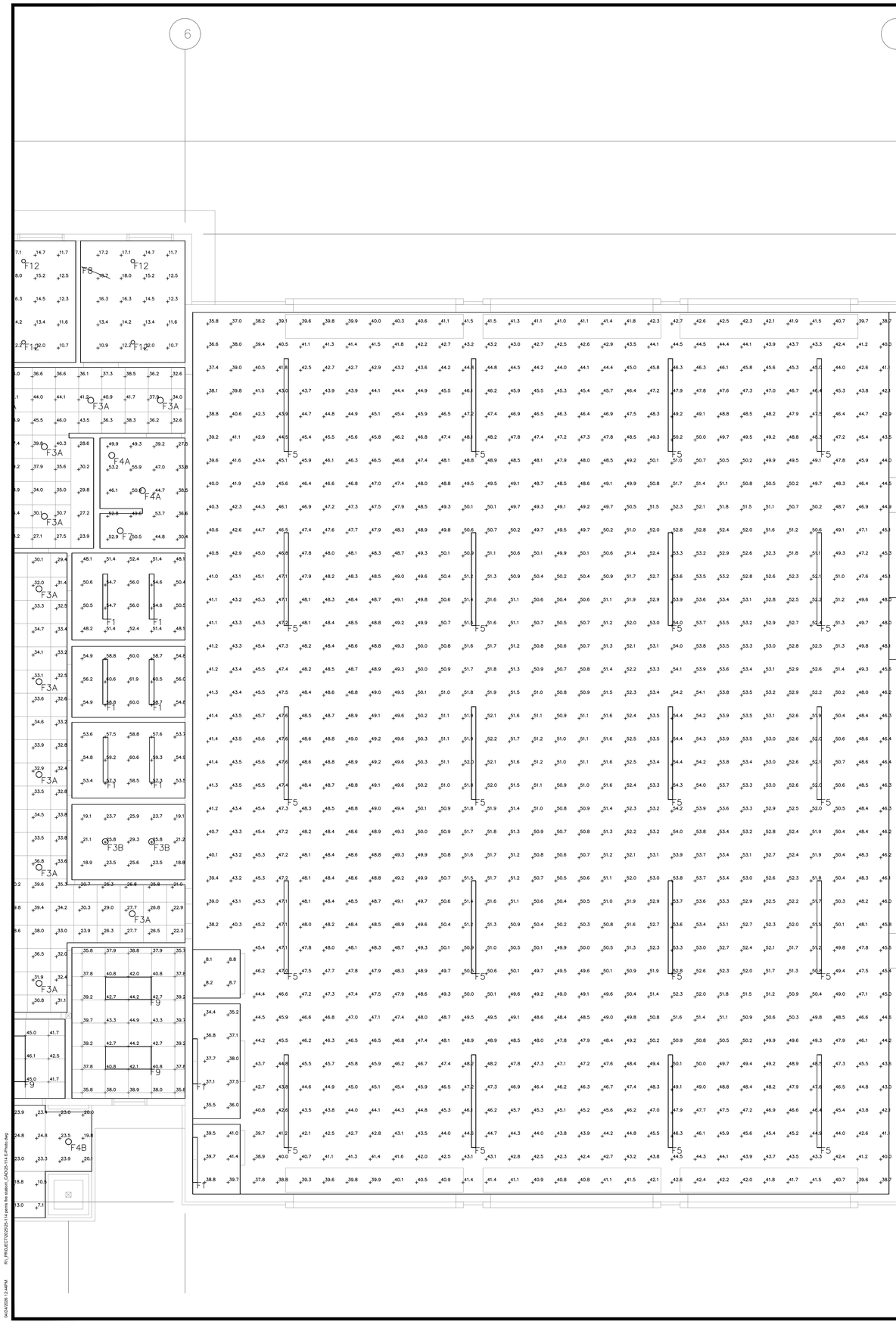

Schedule								
Symbol	Label	QTY	Catalog Number	Description	Lamp	Lumens per Lamp	LLF	Wattage
	F1	21	BLWP4 40L ADSM LP835	BLWP 4ft 4000 Nominal Lumens, Curved Smooth lens, 3500K CCT, 80CRI		4040	0.9	34.54
	F2A	2	UPLD 22IN SWW4 90CRI	Swivel LED Undercabinet, 22Inch, Switchable, 90CRI		831	0.9	11.4
	F2B	2	UPLD 30IN SWW4 90CRI	Swivel LED Undercabinet, 30Inch, Switchable, 90CRI		1106	0.9	15.3
	F3A	43	IVO6S D 15LM 35K 80CRI MWD P AR LSS	IVO6 Round Shallow Downlight 1500 Lumens 35K 80CRI Medium Wide Open Reflector Clear Semi Specular		1541	0.9	13.32
	F3B	13	IVO6S D 07LM 35K 80CRI MD P AR LSS	IVO6 Round Shallow Downlight 700 Lumens 35K 80CRI Medium Open Reflector Clear Semi Specular		830	0.9	7.48
	F4A	12	IVO6S D 15LM 35K 80CRI MWD P AR LSS	IVO6 Round Shallow Downlight 1500 Lumens 35K 80CRI Medium Wide Open Reflector Clear Semi Specular		1313	0.9	13.32
	F4B	13	IVO6S D 20LM 35K 80CRI WD P AR LSS	IVO6 Round Shallow Downlight 2000 Lumens 35K 80CRI Wide Open Reflector Clear Semi Specular		2068	0.9	17.52
	F5	20	CSVT L96 12000LM MVOLT 400K 80CRI	Contractor Select LED Vapor Tite, 96", 12000LM, 120-277V,4000K, 80 CRI		12425	0.9	103
	F6	5	VAP 4000LM FST WD 40K 90CRI	VAP LED with BLT Gen 2 Boards		3348	0.9	32.9
	F7	6	EVO6SH 35/20 DFF SQ	EVO 6IN SHOWER, 3500K, 2000LM, FLUSH SQUTE, 80CRI		1693	0.9	24.7
	F8	11	6857	TUBLED 55 MM	LED	403	0.9	7
	F9	10	STAKP 2X4 4000LM 90CRI 35K COLT MVOLT	High Efficiency Recessed Center Element LED Lay In, 2ft X 4ft, 4000 Nominal Lumens, 90 CRI, 3500K, Curved Opal Lens with Trim Rings, 120-277V		3599	0.9	30.29
	F10	3	FCARP-12-D-HLO-SW-840 -800-30	GR20210607-16-05-18-TRONKI 12 DR GT-V3		800	0.9	10.58
	F11A	4	STAKP 2X2 3000LM 90CRI 35K COLT MVOLT	High Efficiency Recessed Center Element LED Lay In, 2ft X 2ft, 3000 Nominal Lumens, 90 CRI, 3500K, Curved Opal Lens with Trim Rings, 120-277V		2729	0.9	22.66
	F12	24	RB4S SWX5 MW M6 3000K	4 inch 5CCT Switchable White LED Trim Downlight Smooth	Kit	617	0.9	7.2

Statistics						
Description	Symbol	Avg	Max	Min	Max/Min	Avg/Min
APP BAY SIDE ENTRANCE	+	23.7 fc	25.6 fc	22.6 fc	1.1:1	1.0:1
APPARATUS BAY	+	47.8 fc	54.4 fc	30.9 fc	1.8:1	1.5:1
BATH 1	+	45.4 fc	55.9 fc	27.5 fc	2.0:1	1.7:1
BATH 2	+	44.7 fc	55.5 fc	26.9 fc	2.1:1	1.7:1
BATH 3	+	45.0 fc	55.7 fc	26.8 fc	2.1:1	1.7:1
BATH 4	+	43.4 fc	54.4 fc	25.2 fc	2.2:1	1.7:1
BATH 5	+	46.2 fc	56.5 fc	28.5 fc	2.0:1	1.6:1
BC BATH	+	46.0 fc	57.6 fc	30.8 fc	1.9:1	1.5:1
BC ENTRY	+	24.2 fc	27.0 fc	21.6 fc	1.3:1	1.1:1
BC QUARTERS	+	17.1 fc	22.3 fc	12.0 fc	1.9:1	1.4:1
COMM ROOM	+	58.0 fc	61.9 fc	54.8 fc	1.1:1	1.1:1
DAYROOM	+	35.3 fc	42.0 fc	25.1 fc	1.7:1	1.4:1
DINING ROOM	+	46.4 fc	56.2 fc	34.3 fc	1.6:1	1.4:1
DINING ROOM TABLE	+	56.4 fc	67.8 fc	40.6 fc	1.7:1	1.4:1
ELECTRICAL ROOM	+	35.5 fc	42.4 fc	28.6 fc	1.5:1	1.2:1
EXERCISE ROOM	+	37.1 fc	43.2 fc	27.9 fc	1.5:1	1.3:1
FSR	+	40.0 fc	41.4 fc	38.8 fc	1.1:1	1.0:1
HALLWAY 2	+	31.5 fc	40.2 fc	20.7 fc	1.9:1	1.5:1
HALLWAY 3	+	35.7 fc	46.0 fc	23.2 fc	2.0:1	1.5:1
HALLWAY 3 ENTRY	+	23.7 fc	25.6 fc	22.6 fc	1.1:1	1.0:1
ICE MACHINE	+	8.5 fc	8.8 fc	8.1 fc	1.1:1	1.0:1
JANITOR	+	36.5 fc	38.0 fc	34.4 fc	1.1:1	1.1:1
KITCHEN	+	57.5 fc	82.9 fc	30.6 fc	2.7:1	1.9:1
LAUNDRY	+	51.8 fc	56.0 fc	48.1 fc	1.2:1	1.1:1
LOBBY	+	45.4 fc	49.2 fc	41.7 fc	1.2:1	1.1:1
MAIN ENTRY	+	20.1 fc	24.8 fc	7.1 fc	3.5:1	2.8:1
MECHANICAL	+	52.2 fc	56.5 fc	48.5 fc	1.2:1	1.1:1
MEDICAL STORAGE	+	56.7 fc	60.6 fc	53.4 fc	1.1:1	1.1:1
OFFICE 1	+	39.9 fc	44.9 fc	35.7 fc	1.3:1	1.1:1
OFFICE 2	+	37.8 fc	41.9 fc	34.6 fc	1.2:1	1.1:1
OFFICE 3	+	37.8 fc	41.9 fc	34.6 fc	1.2:1	1.1:1
PANTRY	+	28.4 fc	30.9 fc	26.2 fc	1.2:1	1.1:1
PATIO	+	35.8 fc	45.8 fc	20.0 fc	2.3:1	1.8:1
RESTROOM	+	23.0 fc	29.3 fc	18.8 fc	1.6:1	1.2:1
RESTROOM APP BAY	+	25.7 fc	31.6 fc	22.6 fc	1.4:1	1.1:1
SLEEP QUARTERS 1	+	14.1 fc	18.7 fc	10.7 fc	1.7:1	1.3:1
SLEEP QUARTERS 2	+	14.1 fc	18.7 fc	10.7 fc	1.7:1	1.3:1
SLEEP QUARTERS 3	+	14.1 fc	18.7 fc	10.7 fc	1.7:1	1.3:1
SLEEP QUARTERS 4	+	14.1 fc	18.7 fc	10.7 fc	1.7:1	1.3:1
SLEEP QUARTERS 5	+	13.7 fc	18.8 fc	10.0 fc	1.9:1	1.4:1
SLEEP QUARTERS 6	+	14.1 fc	18.7 fc	10.7 fc	1.7:1	1.3:1
SLEEP QUARTERS 7	+	14.1 fc	18.7 fc	10.7 fc	1.7:1	1.3:1
SLEEP QUARTERS 8	+	13.7 fc	18.9 fc	10.7 fc	1.8:1	1.3:1
SLEEP QUARTERS 9	+	13.8 fc	18.6 fc	10.7 fc	1.7:1	1.3:1
TURN OUT GEAR ROOM	+	45.3 fc	52.6 fc	36.4 fc	1.4:1	1.2:1
UTILITY	+	33.7 fc	40.0 fc	24.5 fc	1.6:1	1.4:1

STK ARCHITECTS, INC.
42095 ZEVO DR. TEMECULA, CALIFORNIA 92590-3780
Phone: 951.296.8110 Fax: 951.296.8079 Email: stk@stkinc.com

CONSULTANT:

REVIEWED FOR CODE COMPLIANCE

THESE DRAWINGS AND DOCUMENTS HAVE BEEN REVIEWED AND FOUND TO BE IN SUBSTANTIAL COMPLIANCE WITH THE APPLICABLE CODES. THIS REVIEW IS SUBJECT TO ALL CONDITIONS AND LIMITATIONS IMPOSED BY THE BUILDING OFFICIAL. THE CONTRACTOR IS RESPONSIBLE FOR THE CONSTRUCTION OF THE PROJECT IN ACCORDANCE WITH THE APPROVED PLANS AND ALL APPLICABLE CODES. THE CONTRACTOR SHALL NOT DEVIATE FROM THE APPROVED PLANS WITHOUT OBTAINING THE WRITTEN APPROVAL OF THE BUILDING OFFICIAL. ANY DEVIATIONS MAY INVALIDATE THIS APPROVAL. IT IS THE CONTRACTOR'S RESPONSIBILITY TO OBTAIN ALL NECESSARY APPROVALS AND INSPECTIONS. REVIEWED BY: DATE:

DESIGN WEST ENGINEERING
MECHANICAL / ELECTRICAL / ENERGY CONSULTANTS
FORMERLY BERGE CONSULTANTS
DEPARTMENT
SOLUTIONS INC.

REGISTERED PROFESSIONAL ENGINEER
KEVIN KLOTZ
22839
SIGNED 04/24/2026
ELECTRICAL
STATE OF CALIFORNIA

PROJECT ADMINISTERED BY:

CITY OF PERRIS

101 NORTH "D" STREET
PERRIS, CA 92570

PROJECT NAME:

SOUTH FIRE STATION AND ADMINISTRATIVE BUILDING

PROJECT CIP: F077

2495 MURRIETA ROAD
PERRIS, CA 92585

ISSUE INFORMATION:

DATE:	INFORMATION:
11-26-25	95% CD SUBMITTAL
02-05-26	△ 1st PC RESPONSE
02-19-26	△ 2nd PC RESPONSE

SHEET INFORMATION:

STK PROJECT NO.: 365-03-25
SCALE: AS NOTED
DATE: NOVEMBER 2025
PLOT DATE: –
DRAWN BY: JM / JM

SEAL:

SHEET TITLE:

FIRE STATION PHOTOMETRY - NORMAL SEG B

SHEET NO.:

E4.2

25-114

04/24/2026 12:44PM R:_PROJECTS\2025\25-114 south fire station_CAD\25-114 E-Photo.dwg

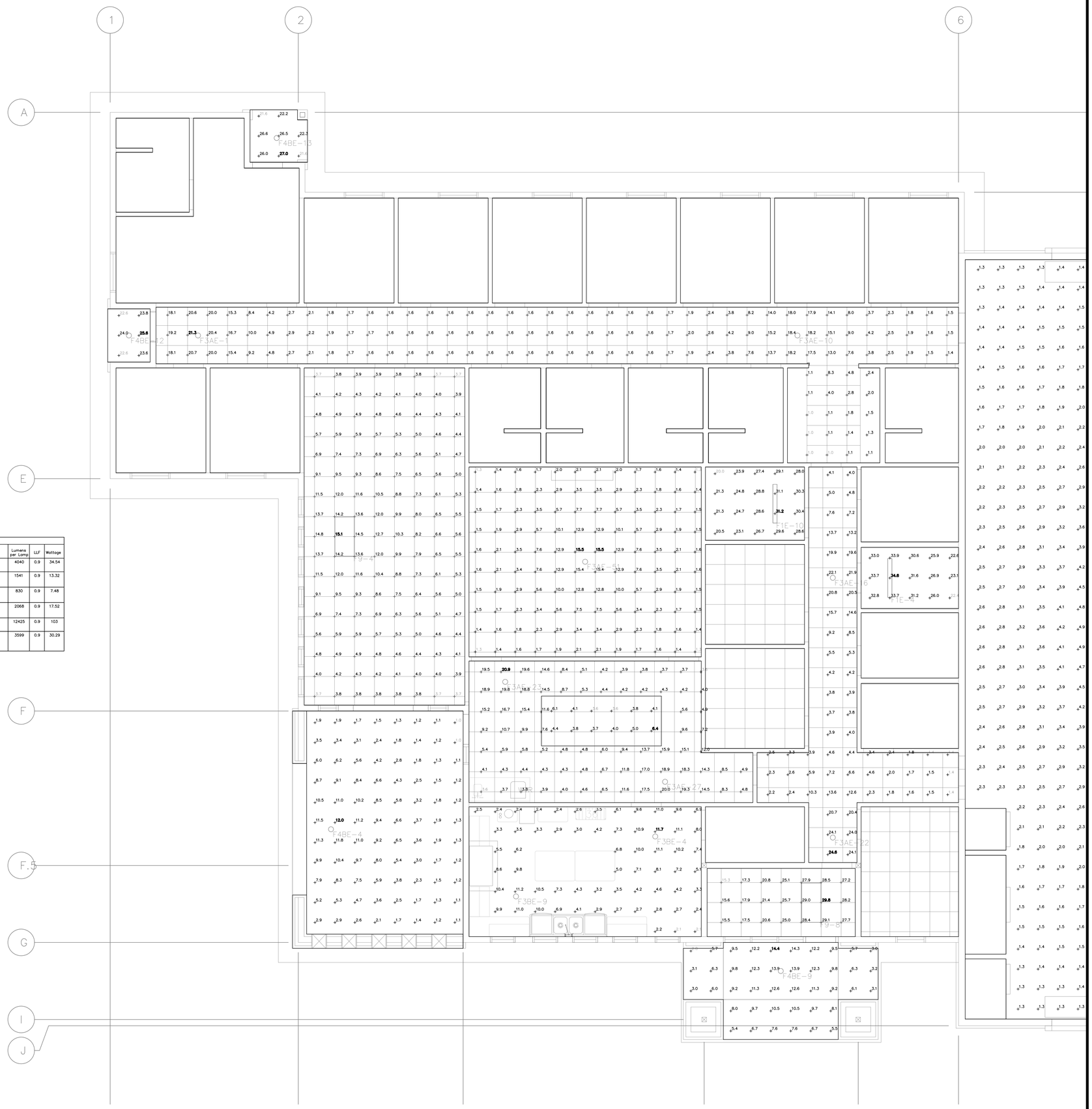
1
2
6
A
E
F
F.5
G
I
J
F4BE-13
F4BE-12
F3AE-4
F3AE-10
F3AE-23
F3AE-27
F3AE-22
F4BE-4
F3BE-4
F3BE-9
F4BE-9
F1E-10
F1E-9
F3AE-6
F3AE-5
F5E-8
F5E-11
F5E-12
F5E-13
F5E-14
F5E-15
F5E-16
F5E-17
F5E-18
F5E-19
F5E-20
F5E-21
F5E-22
F5E-23
F5E-24
F5E-25
F5E-26
F5E-27
F5E-28
F5E-29
F5E-30
F5E-31
F5E-32
F5E-33
F5E-34
F5E-35
F5E-36
F5E-37
F5E-38
F5E-39
F5E-40
F5E-41
F5E-42
F5E-43
F5E-44
F5E-45
F5E-46
F5E-47
F5E-48
F5E-49
F5E-50

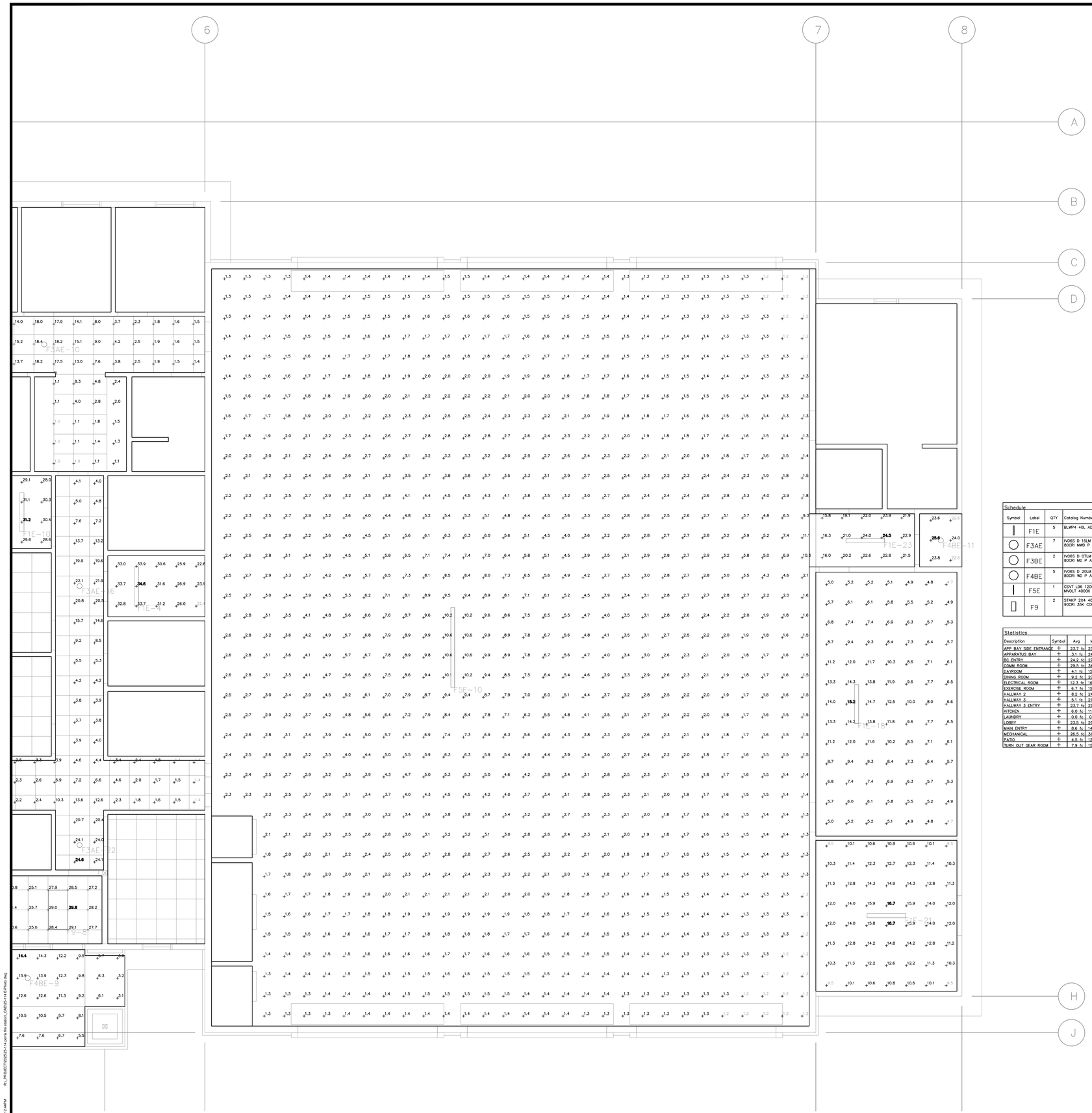

Schedule

Symbol	Label	QTY	Catalog Number	Description	Lamp	Lumens per Lamp	LLF	Wattage
▮	F1E	5	BLWP4 40L ADSM LP835	BLWP 4ft 4000 Nominal Lumens, Curved Smooth lens, 3500K CCT, 80CRI		4040	0.9	34.54
◯	F3AE	7	IVO6S D 15LM 35K 80CRI MVD P AR LSS	IVO6 Round Shallow Downlight 1500 Lumens 35K 80CRI Medium Wide Open Reflector Clear Semi Specular		1541	0.9	13.32
◯	F3BE	2	IVO6S D 07LM 35K 80CRI MD P AR LSS	IVO6 Round Shallow Downlight 700 Lumens 35K 80CRI Medium Open Reflector Clear Semi Specular		830	0.9	7.48
◯	F4BE	5	IVO6S D 20LM 35K 80CRI WD P AR LSS	IVO6 Round Shallow Downlight 2000 Lumens 35K 80CRI Wide Open Reflector Clear Semi Specular		2068	0.9	17.52
▮	F5E	1	CSVT L96 12000LM MVOLT 4000K 80CRI	Contractor Select LED Vapor Tite, 96", 12000LM, 120-277V,4000K, 80 CRI		12425	0.9	103
▯	F9	2	STAKP 2X4 4000LM 90CRI 35K COLT MVOL	High Efficiency Recessed Center Element LED Lay in, 2ft X 4ft, 4000 Nominal Lumens, 90 CRI, 3500K, Curved Opal Lens with Trim Rings, 120-277V		3599	0.9	30.29

Statistics

Description	Symbol	Avg	Max	Min	Max/Min	Avg/Min
APP BAY SIDE ENTRANCE	+	23.7 fc	25.6 fc	22.6 fc	1.1:1	1.0:1
APPARATUS BAY	+	3.1 fc	24.5 fc	1.2 fc	20.4:1	2.6:1
BC ENTRY	+	24.2 fc	27.0 fc	21.6 fc	1.3:1	1.1:1
COMM ROOM	+	29.5 fc	34.8 fc	22.4 fc	1.5:1	1.3:1
DAYROOM	+	4.1 fc	15.5 fc	1.3 fc	11.9:1	3.2:1
DINING ROOM	+	9.2 fc	20.9 fc	3.6 fc	5.8:1	2.6:1
ELECTRICAL ROOM	+	12.3 fc	16.7 fc	9.5 fc	1.8:1	1.3:1
EXERCISE ROOM	+	6.7 fc	15.1 fc	3.7 fc	4.1:1	1.8:1
HALLWAY 2	+	8.2 fc	24.6 fc	1.4 fc	17.6:1	5.9:1
HALLWAY 3	+	5.1 fc	21.3 fc	1.0 fc	21.3:1	5.1:1
HALLWAY 3 ENTRY	+	23.7 fc	25.6 fc	22.6 fc	1.1:1	1.0:1
KITCHEN	+	6.0 fc	11.7 fc	2.1 fc	5.6:1	2.9:1
LAUNDRY	+	0.0 fc	0.0 fc	0.0 fc	N/A	N/A
LOBBY	+	23.5 fc	29.8 fc	15.3 fc	1.9:1	1.5:1
MAIN ENTRY	+	8.6 fc	14.4 fc	2.8 fc	5.1:1	3.1:1
MECHANICAL	+	26.5 fc	31.2 fc	20.0 fc	1.6:1	1.3:1
PATIO	+	4.5 fc	12.0 fc	1.0 fc	12.0:1	4.5:1
TURN OUT GEAR ROOM	+	7.9 fc	15.2 fc	4.7 fc	3.2:1	1.7:1

STK ARCHITECTS, INC.
42095 ZEVO DR., TEMECULA, CALIFORNIA 92590-3780
Phone: 951.296.9110 Fax: 951.296.6079 Email: stk@stkinc.com

CONSULTANT:

REVIEWED FOR CODE COMPLIANCE

THESE DRAWINGS AND DOCUMENTS HAVE BEEN REVIEWED AND FOUND TO BE IN SUBSTANTIAL COMPLIANCE WITH THE APPLICABLE CODES AND ORDINANCES. THIS REVIEW IS SUBJECT TO ALL CONDITIONS AND LIMITATIONS SHOWN ON THE APPROVED PLANS AND THE BUILDING PERMIT. THE ISSUANCE OF A PERMIT BASED ON THESE DRAWINGS AND DOCUMENTS DOES NOT PREVENT THE BUILDING OFFICIAL FROM REQUIRING CORRECTIONS TO ERRORS AND OMISSIONS. CONTRACTOR OF RECORD IS RESPONSIBLE FOR CONSTRUCTION TO COMPLY WITH ALL APPLICABLE CODES AND ORDINANCES. THE APPROVAL OF THESE DRAWINGS AND DOCUMENTS DOES NOT AUTHORIZE THE VIOLATION OF ANY CODE OR ORDINANCE. CITY OF PERRIS BUILDING & SAFETY DEPARTMENT

DESIGN WEST ENGINEERING
MECHANICAL / ELECTRICAL / ENERGY CONSULTANTS
BUILDING ENERGY SOLUTIONS INC.

REGISTERED PROFESSIONAL ENGINEER
KEVIN K. KOO
22839
SIGNED 04/24/2026
ELECTRICAL
STATE OF CALIFORNIA

PROJECT ADMINISTERED BY:

CITY OF PERRIS

101 NORTH "D" STREET
PERRIS, CA 92570

PROJECT NAME:

SOUTH FIRE STATION AND ADMINISTRATIVE BUILDING

PROJECT CIP: F077

2495 MURRIETA ROAD
PERRIS, CA 92585

ISSUE INFORMATION:

DATE:	INFORMATION:
11-26-25	95% CD SUBMITTAL
02-05-26	△ 1st PC RESPONSE
02-19-26	△ 2nd PC RESPONSE

SHEET INFORMATION:

STK PROJECT NO.: 365-03-25
SCALE: AS NOTED
DATE: NOVEMBER 2025
PLOT DATE: –
DRAWN BY: JM / JM

SEAL:

SHEET TITLE:

FIRE STATION PHOTOMETRY - EMERGENCY EGRESS SEG B

SHEET NO.:

E4.4

8/24/2026 12:44PM P:_PROJECTS\2025\25-114 perris fire station_CAD\25-114 EPhoto.dwg

Schedule

Symbol	Label	QTY	Catalog Number	Description	Lamp	Lumens per Lamp	LLF	Wattage
	F1	13	BLWP4 40L ADSM LP835	BLWP 4ft 4000 Nominal Lumens, Curved Smooth lens, 3500K CCT, 80CRI		4040	0.9	34.54
	F3B	11	IVO6S D 07LM 35K 80CRI MD P AR LSS	IVO6 Round Shallow Downlight 700 Lumens 35K 80CRI Medium Open Reflector Clear Semi Specular		830	0.9	7.48
	F4A	7	IVO6S D 15LM 35K 90CRI MWD P AR LSS	IVO6 Round Shallow Downlight 1500 Lumens 35K 90CRI Medium Wide Open Reflector Clear Semi Specular		1313	0.9	13.32
	F4B	11	IVO6S D 20LM 35K 80CRI WD P AR LSS	IVO6 Round Shallow Downlight 2000 Lumens 35K 80CRI Wide Open Reflector Clear Semi Specular		2068	0.9	17.52
	F9	16	STAKP 2X4 4000LM 90CRI 35K COLT MVOL	High Efficiency Recessed Center Element LED Lay In, 2Ft X 4Ft, 4000 Nominal Lumens, 90 CRI, 3500K, Curved Opal Lens with Trim Rings, 120-277V		3599	0.9	30.29
	F11A	19	STAKP 2X2 3000LM 90CRI 35K COLT MVOL	High Efficiency Recessed Center Element LED Lay In, 2Ft X 2Ft, 3000 Nominal Lumens, 90 CRI, 3500K, Curved Opal Lens with Trim Rings, 120-277V		2729	0.9	22.66
	F11B	39	STAKP 2X2 2000LM 90CRI 35K COLT MVOL	High Efficiency Recessed Center Element LED Lay In, 2Ft X 2Ft, 2000 Nominal Lumens, 90 CRI, 3500K, Curved Opal Lens with Trim Rings, 120-277V		1948	0.9	15.8

Statistics

Description	Symbol	Avg	Max	Min	Max/Min	Avg/Min
- EAST	+	29.1 fc	31.5 fc	27.0 fc	1.2:1	1.1:1
BREAKROOM	+	31.9 fc	41.9 fc	20.0 fc	2.1:1	1.6:1
COMM RM	+	60.4 fc	64.3 fc	57.2 fc	1.1:1	1.1:1
CONFERENCE ROOM	+	40.8 fc	45.7 fc	35.6 fc	1.3:1	1.1:1
ELECTRICAL ROOM	+	45.8 fc	49.0 fc	42.5 fc	1.2:1	1.1:1
ENTRANCE - NORTH	+	28.7 fc	29.3 fc	28.1 fc	1.0:1	1.0:1
ENTRY PORCH	+	15.6 fc	28.3 fc	6.5 fc	4.0:1	2.4:1
FSR	+	33.4 fc	33.6 fc	33.3 fc	1.0:1	1.0:1
HALLWAY 1	+	39.2 fc	45.2 fc	28.3 fc	1.6:1	1.4:1
HALLWAY 2	+	35.1 fc	38.2 fc	33.6 fc	1.1:1	1.0:1
HALLWAY 3	+	38.3 fc	39.2 fc	35.8 fc	1.1:1	1.1:1
JANITOR	+	43.1 fc	44.9 fc	41.2 fc	1.1:1	1.0:1
MECHANICAL ROOM	+	60.7 fc	64.7 fc	57.6 fc	1.1:1	1.1:1
MENS RR	+	31.1 fc	39.6 fc	24.4 fc	1.6:1	1.3:1
OFFICE 1	+	50.7 fc	55.2 fc	47.0 fc	1.2:1	1.1:1
OFFICE 2	+	50.7 fc	55.2 fc	47.0 fc	1.2:1	1.1:1
OFFICE 3	+	50.7 fc	55.2 fc	46.6 fc	1.2:1	1.1:1
OFFICE 4	+	38.6 fc	42.8 fc	35.5 fc	1.2:1	1.1:1
OFFICE 5	+	38.6 fc	42.8 fc	35.5 fc	1.2:1	1.1:1
OFFICE 6	+	39.9 fc	43.5 fc	36.8 fc	1.2:1	1.1:1
OFFICE 7	+	37.3 fc	41.4 fc	33.6 fc	1.2:1	1.1:1
OPEN OFFICE	+	43.2 fc	52.7 fc	26.4 fc	2.0:1	1.6:1
PATIO	+	22.2 fc	31.8 fc	10.0 fc	3.2:1	2.2:1
PUBLIC RR	+	30.5 fc	39.0 fc	23.9 fc	1.6:1	1.3:1
RECEPTION/LOBBY	+	32.9 fc	44.7 fc	20.5 fc	2.2:1	1.6:1
STORAGE /PANTRY	+	33.4 fc	36.9 fc	29.4 fc	1.3:1	1.1:1
STORAGE ROOM	+	51.5 fc	56.6 fc	44.0 fc	1.3:1	1.2:1
TRAINING ROOM	+	42.9 fc	49.5 fc	31.2 fc	1.6:1	1.4:1
WOMENS RR	+	31.1 fc	39.9 fc	23.3 fc	1.7:1	1.3:1

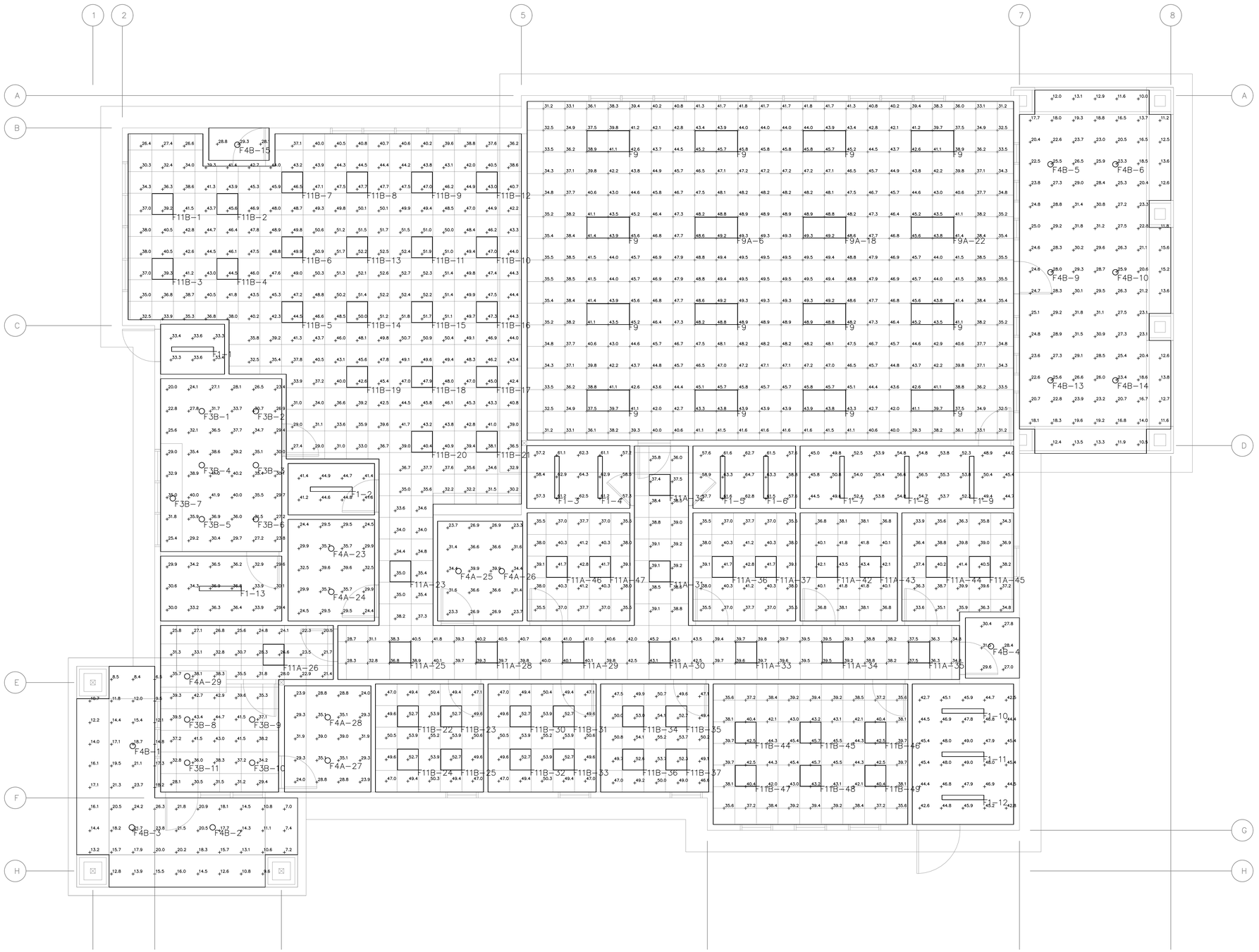

STK ARCHITECTURE INC.
42095 ZEVO DR. TEMECULA, CALIFORNIA 92590-3780
Phone: 951.296.8110 Fax: 951.296.6079 Email: stk@stkinc.com

CONSULTANT:

REVIEWED FOR CODE COMPLIANCE

THESE DRAWINGS AND DOCUMENTS HAVE BEEN REVIEWED AND FOUND TO BE IN SUBSTANTIAL COMPLIANCE WITH THE APPLICABLE CODES. THIS REVIEW IS LIMITED TO ITEMS WHICH ARE VISIBLE ON THE PLANS AND DOES NOT INCLUDE ANY CONCEALED CONDITIONS. NOR DOES IT INCLUDE ANY ITEMS WHICH ARE NOT SHOWN ON THE PLANS. THE CONTRACTOR OF RECORD IS RESPONSIBLE FOR CONSTRUCTION IN COMPLIANCE WITH ALL APPLICABLE CODES AND REGULATIONS. THE CONTRACTOR OF RECORD IS RESPONSIBLE FOR THE CORRECTION OF ALL CODE VIOLATIONS, EVEN THOSE NOT NOTED ON THE PLANS. CONTACT: Lenwood Woodard lenwood@designwesteng.com

BUILDING DEPARTMENT

DESIGN WEST ENGINEERING
MECHANICAL / ELECTRICAL / ENERGY CONSULTANTS
DEPARTMENT

BUILDING ENERGY SOLUTIONS INC.

REGISTERED PROFESSIONAL ENGINEER
DENNIS KYLE MORRIS
22839
SIGNED 04/24/2026
ELECTRICAL
STATE OF CALIFORNIA

PROJECT ADMINISTERED BY:

CITY OF PERRIS

101 NORTH "D" STREET
PERRIS, CA 92570

PROJECT NAME:

SOUTH FIRE STATION AND ADMINISTRATIVE BUILDING

PROJECT CIP: F077

2495 MURRIETA ROAD
PERRIS, CA 92585

ISSUE INFORMATION:

DATE:	INFORMATION:
11-26-25	95% CD SUBMITTAL
02-05-26	1st PC RESPONSE
02-19-26	2nd PC RESPONSE

SHEET INFORMATION:

STK PROJECT NO.: 365-03-25
SCALE: AS NOTED
DATE: NOVEMBER 2025
PLOT DATE: --
DRAWN BY: JM / JM

SEAL:

SHEET TITLE:

ADMIN PHOTOMETRY - NORMAL

SHEET NO.:

E4.5

25-114

M:\PROJECTS\2025\25-114 Perris fire station_CAD\25-114 E-Photo.dwg
04/24/2026 12:43PM

Schedule

Symbol	Label	QTY	Catalog Number	Description	Lumens per Lamp	LLF	Wattage
	F1E	1	BLWP4 40L ADSM LP835	BLWP 4ft 4000 Nominal Lumens, Curved Smooth lens, 3500K CCT, 80CRI	4040	0.9	34.54
	F3BE	2	IVO6S D 07LM 35K 80CRI MD P AR LSS	IVO6 Round Shallow Downlight 700 Lumens 35K 80CRI Medium Open Reflector Clear Semi Specular	830	0.9	7.48
	F4BE	4	IVO6S D 20LM 35K 80CRI WD P AR LSS	IVO6 Round Shallow Downlight 2000 Lumens 35K 80CRI Wide Open Reflector Clear Semi Specular	2068	0.9	17.52
	F9E	2	STAKP 2X4 4000LM 90CRI 35K COLT MVOL	High Efficiency Recessed Center Element LED Lay in, 2ft X 4ft, 4000 Nominal Lumens, 90 CRI, 3500K, Curved Opal Lens with Trim Rings, 120-277V	3599	0.9	30.29
	F11AE	10	STAKP 2X2 3000LM 90CRI 35K COLT MVOL	High Efficiency Recessed Center Element LED Lay in, 2ft X 2ft, 3000 Nominal Lumens, 90 CRI, 3500K, Curved Opal Lens with Trim Rings, 120-277V	2729	0.9	22.66
	F11BE	7	STAKP 2X2 2000LM 90CRI 35K COLT MVOL	High Efficiency Recessed Center Element LED Lay in, 2ft X 2ft, 2000 Nominal Lumens, 90 CRI, 3500K, Curved Opal Lens with Trim Rings, 120-277V	1948	0.9	15.8

Statistics

Description	Symbol	Avg	Max	Min	Max/Min	Avg/Min
_ EAST	+	29.1 fc	31.4 fc	27.0 fc	1.2:1	1.1:1
BREAKROOM	+	4.4 fc	12.3 fc	1.5 fc	8.2:1	2.9:1
COMM RM	+	0.0 fc	0.0 fc	0.0 fc	N/A	N/A
CONFERENCE ROOM	+	7.5 fc	11.1 fc	5.2 fc	2.1:1	1.4:1
ELECTRICAL ROOM	+	15.8 fc	17.5 fc	14.2 fc	1.2:1	1.1:1
ENTRANCE _ NORTH	+	28.7 fc	29.3 fc	28.1 fc	1.0:1	1.0:1
ENTRY PORCH	+	5.6 fc	12.4 fc	0.3 fc	41.3:1	18.7:1
FSR	+	0.0 fc	0.0 fc	0.0 fc	N/A	N/A
HALLWAY 1	+	17.8 fc	22.1 fc	9.7 fc	2.3:1	1.8:1
HALLWAY 2	+	17.6 fc	20.0 fc	13.2 fc	1.5:1	1.3:1
HALLWAY 3	+	22.2 fc	25.8 fc	19.5 fc	1.3:1	1.1:1
JANITOR	+	0.0 fc	0.0 fc	0.0 fc	N/A	N/A
MECHANICAL ROOM	+	0.0 fc	0.0 fc	0.0 fc	N/A	N/A
MENS RR	+	0.0 fc	0.0 fc	0.0 fc	N/A	N/A
OFFICE 1	+	13.3 fc	16.7 fc	10.2 fc	1.6:1	1.3:1
OFFICE 2	+	13.3 fc	16.7 fc	10.2 fc	1.6:1	1.3:1
OFFICE 3	+	13.3 fc	16.7 fc	10.2 fc	1.6:1	1.3:1
OFFICE 4	+	19.7 fc	23.3 fc	16.4 fc	1.4:1	1.2:1
OFFICE 5	+	19.7 fc	23.3 fc	16.4 fc	1.4:1	1.2:1
OFFICE 6	+	20.4 fc	23.3 fc	17.1 fc	1.4:1	1.2:1
OFFICE 7	+	19.0 fc	22.4 fc	14.9 fc	1.5:1	1.3:1
OPEN OFFICE	+	7.3 fc	11.4 fc	4.2 fc	2.7:1	1.7:1
PATIO	+	3.9 fc	12.3 fc	0.3 fc	41.0:1	13.0:1
PUBLIC RR	+	0.0 fc	0.0 fc	0.0 fc	N/A	N/A
RECEPTION/LOBBY	+	14.5 fc	18.5 fc	8.0 fc	2.3:1	1.8:1
STORAGE PANTRY	+	0.0 fc	0.0 fc	0.0 fc	N/A	N/A
STORAGE ROOM	+	0.0 fc	0.0 fc	0.0 fc	N/A	N/A
TRAINING ROOM	+	5.8 fc	10.7 fc	2.9 fc	3.7:1	2.0:1
WOMENS RR	+	0.0 fc	0.0 fc	0.0 fc	N/A	N/A

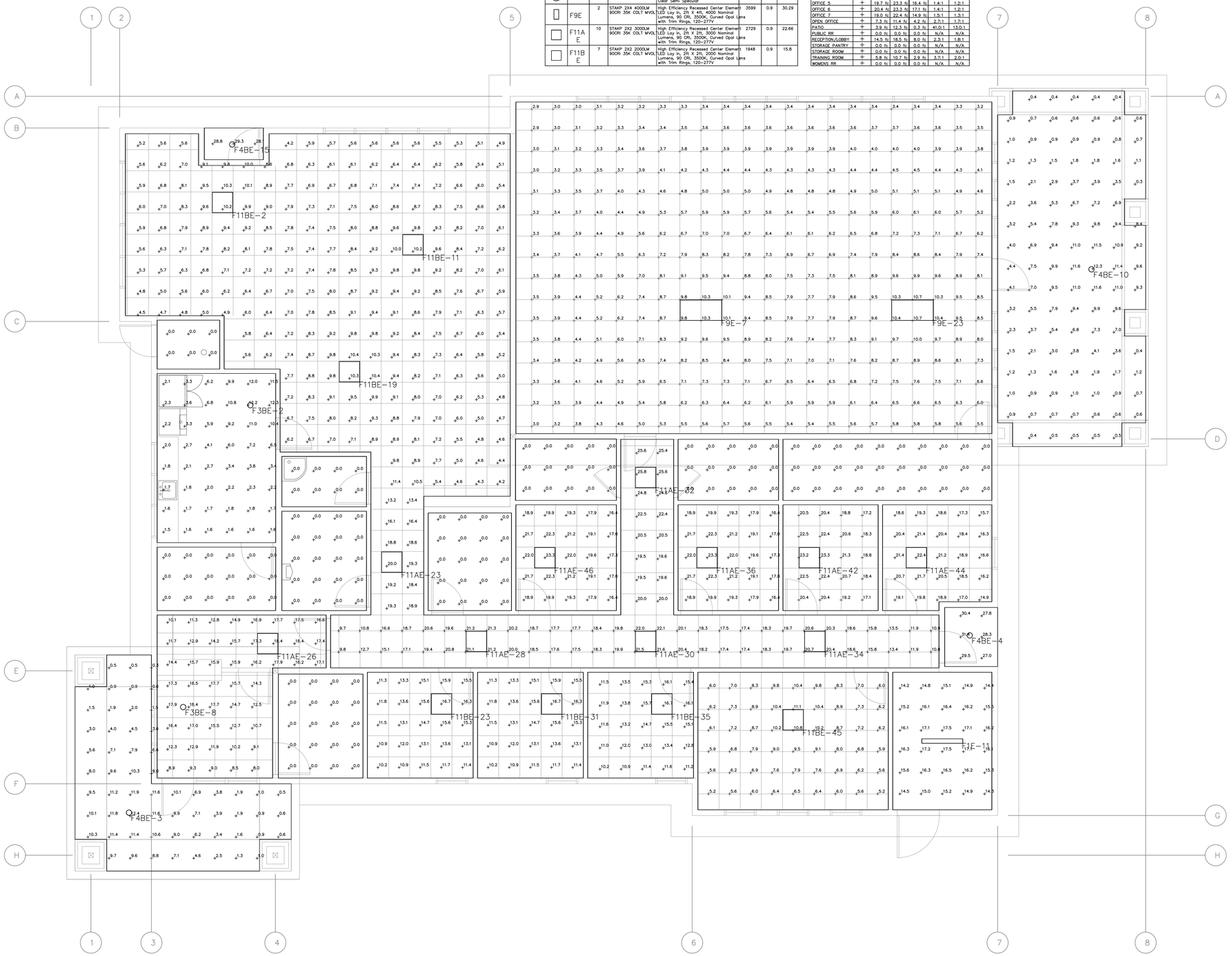

STK ARCHITECTURE, INC.
42095 ZEVO DR., TEMECULA, CALIFORNIA 92590-3780
Phone: 951.296.9110 Fax: 951.296.6079 Email: stk@stkinc.com

CONSULTANT:

REVIEWED FOR CODE COMPLIANCE

THESE DRAWINGS AND DOCUMENTS HAVE BEEN REVIEWED AND FOUND TO BE IN SUBSTANTIAL COMPLIANCE WITH THE CODES AND REGULATIONS IN EFFECT AT THE TIME OF PLAN SUBMITTAL. THIS REVIEW DOES NOT AUTHORIZE VIOLATIONS OF ANY CODE OR REGULATION NOR DOES IT RELIEVE THE OWNER AND CONTRACTOR OF THEIR RESPONSIBILITY TO COMPLY WITH ALL APPLICABLE CODES AND REGULATIONS. THE BUILDING DEPARTMENT MAY REQUIRE CORRECTIONS TO WORK SHOWN ON THESE PLANS AND MAY REQUIRE ADDITIONAL WORK NOT INCLUDED HEREIN. IT IS THE RESPONSIBILITY OF THE OWNER AND CONTRACTOR TO ASSURE THAT CONSTRUCTION COMPLIES WITH ALL CODES AND REGULATIONS IN EFFECT AT THE TIME OF CONSTRUCTION.

BY: Edward Wood Jr. Date: 02/19/2026
Edward Wood Jr.
Plan Check Engineer
Building & Safety Division
City of Perris
(951) 943-6504 x 120
ewood@cityofperris.org

DESIGN WEST ENGINEERING
MECHANICAL / ELECTRICAL / ENERGY CONSULTANTS
FURTHER ENERGY SOLUTIONS INC.

REGISTERED PROFESSIONAL ENGINEER
STEVEN K. KOLB
22839
SIGNED 04/24/2026
ELECTRICAL
STATE OF CALIFORNIA

PROJECT ADMINISTERED BY:
CITY OF PERRIS

101 NORTH "D" STREET
PERRIS, CA 92570

PROJECT NAME:
SOUTH FIRE STATION AND ADMINISTRATIVE BUILDING

PROJECT CIP: F077

2495 MURRIETA ROAD
PERRIS, CA 92585

ISSUE INFORMATION:

DATE:	INFORMATION:
11-26-25	95% CD SUBMITTAL
02-05-26	1st PC RESPONSE
02-19-26	2nd PC RESPONSE

SHEET INFORMATION:

STK PROJECT NO.: 365-03-25
SCALE: AS NOTED
DATE: NOVEMBER 2025
PLOT DATE: –
DRAWN BY: JM / JM

SEAL:

SHEET TITLE:
ADMIN PHOTOMETRY - EMERGENCY EGRESS

SHEET NO.:
E4.6

25-114

04/24/2026 12:44PM R:\PROJECTS\2025\25-114 perris fire station_CA\CAD\25-114 EPhoto.dwg

STATE OF CALIFORNIA
Indoor Lighting
CALIFORNIA ENERGY COMMISSION

CERTIFICATE OF COMPLIANCE		NRCC-LTI-E
Project Name: Perris Fire Station	**Report Page:**	**(Page 11 of 11)**
Project Address: 101 North D Street	**Date Prepared:**	2/4/2026

DOCUMENTATION AUTHOR'S DECLARATION STATEMENT

I certify that this Certificate of Compliance documentation is accurate and complete.

Documentation Author Name: Braden Kempton	Documentation Author Signature:
Company: Design West Engineering	Signature Date: 2026-02-04
Address: 412 East Vanderbilt Way	CEA/ HERS Certification Identification (if applicable): 22839
City/State/Zip: San Bernardino CA 92408	Phone: 909-890-3700

RESPONSIBLE PERSON'S DECLARATION STATEMENT

I certify the following under penalty of perjury, under the laws of the State of California:

1. The information provided on this Certificate of Compliance is true and correct.
2. I am eligible under Division 3 of the Business and Professions Code to accept responsibility for the building design or system design identified on this Certificate of Compliance (responsible designer)
3. The energy features and performance specifications, materials, components, and manufactured devices for the building design or system design identified on this Certificate of Compliance conform to the requirements of Title 24, Part 1 and Part 6 of the California Code of Regulations.
4. The building design features or system design features identified on this Certificate of Compliance are consistent with the information provided on other applicable compliance documents, worksheets, calculations, plans and specifications submitted to the enforcement agency for approval with this building permit application.
5. I will ensure that a completed signed copy of this Certificate of Compliance shall be made available with the building permit(s) issued for the building, and made available to the enforcement agency for all applicable inspections. I understand that a completed signed copy of this Certificate of Compliance is required to be included with the documentation the builder provides to the building owner at occupancy.

Responsible Designer Name: Braden Kempton	Responsible Designer Signature:
Company: Design West Engineering	Date Signed: 2026-02-04
Address: 412 East Vanderbilt Way	License: 22839
City/State/Zip: San Bernardino CA 92408	Phone: 909-890-3700

STATE OF CALIFORNIA
Indoor Lighting
CALIFORNIA ENERGY COMMISSION

CERTIFICATE OF COMPLIANCE		NRCC-LTI-E
Project Name: Perris Fire Station	**Report Page:**	**(Page 8 of 11)**
	Date Prepared:	2/4/2026

J. ADDITIONAL ALLOWANCE: AREA CATEGORY METHOD QUALIFYING LIGHTING SYSTEM

All areas indicated in Table I as using an additional allowance using the Area Category Method have been included in this table to calculate the additional allowance per Table 140.6-C /170.2-M

Conditioned Spaces

Unconditioned Spaces

01	02	03	04	05	06	07	08	09	10
Area Description	Primary Function Area	Applicable Qualifying Lighting System from Table 140.6-C	Allowed Density (W/ft² or W/lf or W/unit)	Ltg Area, Length or ATMs (ft², lf or #)	Extra Allowance (Watts)	Luminaire Name or Item Tag	Watts per Luminaire	Number of Luminaires	Total Design Watts
Apparatus Bay - UNCONDITIONED	AutoRepairArea	DetailedTaskA	0.2	4622	924.4	F5	103	20	2060
Total Design Watts	Calculated Allowance (Watts):	Total Additional Allowance for this area:							
2060	924.4	924.4							
11									
Total Additional Allowance (Watts) UNCONDITIONED SPACES		0							

K. TAILORED METHOD GENERAL LIGHTING POWER ALLOWANCE

This section does not apply to this project.

L. ADDITIONAL LIGHTING ALLOWANCE: TAILORED WALL DISPLAY

This section does not apply to this project.

STATE OF CALIFORNIA
Indoor Lighting
CALIFORNIA ENERGY COMMISSION

CERTIFICATE OF COMPLIANCE		NRCC-LTI-E
Project Name: Perris Fire Station	**Report Page:**	**(Page 5 of 11)**
	Date Prepared:	2/4/2026

H. INDOOR LIGHTING CONTROLS (Not including PAFs)

Area Level Controls

04	05	06	07	08	09	10	11	12	
Area Description	Complete Building or Area Category Primary Function Area	Manual Area Controls 130.1(a) / 160.5(b)4A	Multi-Level Controls 130.1(b) / 160.5(b)4B	Shut-Off Controls 130.1(c) // 160.5(b)4C	Primary/Skylit Daylighting 130.1(d) / 160.5(b)4D	Secondary Daylighting 130.1(d) / 160.5(b)4D	Interlocked Systems 140.6(a)1/ 170.2(e)2A	Field Inspector	
								Pass	Fail
Whole Building	All Other Space Types	Readily Accessible	Dimmer	See Building Level	Included	Included	No	☐	☐
							13		
							Plan Sheet Showing Daylit Zones:		

I. LIGHTING POWER ALLOWANCE: COMPLETE BUILDING OR AREA CATEGORY METHODS

Each area complying using the Complete Building or Area Category Methods per 140.6(b) are included in this table. Column 06 indicates if additional lighting power allowances per 140.6(c) or adjustments per 140.6(a) are being used .

Conditioned Spaces

01	02	03	04	05	06	
Area Description	Complete Building or Area Category Primary Function Area	Allowed Density (W/ft²)	Area (ft²)	Allowed Wattage (Watts)	Additional Allowance / Adjustment	
					Area Category	PAF
Zone 1 - Open Office Space	Office (>250 square feet)	0.6	979	587.4	No	No
Zone 2 - Training/MPR	Convention, Conference, Multipurpose and Meeting Center	0.75	641	480.8	No	No
Zone 2 - Training/MPR	Convention, Conference, Multipurpose and Meeting Center	0.75	885	663.8	No	No
Breakroom	Lounge	0.55	180	99	No	No
Janitor - Chemical Storage	All Other Space Types	0.4	39	15.6	No	No
Restrooms	Restroom	0.65	152	98.8	No	No

STATE OF CALIFORNIA
Indoor Lighting
CALIFORNIA ENERGY COMMISSION

CERTIFICATE OF COMPLIANCE		NRCC-LTI-E
Project Name: Perris Fire Station	**Report Page:**	**(Page 10 of 11)**
	Date Prepared:	2/4/2026

U. DECLARATION OF REQUIRED CERTIFICATES OF INSTALLATION

Selections have been made based on information provided in this document. If any selections have been changed by permit applicant, an explanation should be included in Table E. Additional Remarks. These documents must be provided to the building inspector during construction and can be found online

Form/Title
NRCI-LTI-E - Must be submitted for all buildings

V. DECLARATION OF REQUIRED CERTIFICATES OF ACCEPTANCE

Selections have been made based on information provided in this document. If any selections have been changed by the permit applicant, an explanation should be included in Table E. Additional Remarks. These documents must be provided to the building inspector during construction and any with "-A" in the form name must be completed through an Acceptance Test Technician Certification Provider (ATTCP). For more information visit: http://www.energy.ca.gov/title24/attcp/providers.html

Form/Title	Systems/Spaces To Be Field Verified
NRCA-LTI-02-A - Must be submitted for occupancy sensors and automatic time switch controls.	Whole Building Time Switch;
NRCA-LTI-03-A - Must be submitted for automatic daylight controls.	Whole Building;
NRCA-LTI-04-A - Must be submitted for demand responsive lighting controls.	Whole Building Demand Response;

STATE OF CALIFORNIA
Indoor Lighting
CALIFORNIA ENERGY COMMISSION

CERTIFICATE OF COMPLIANCE		NRCC-LTI-E
Project Name: Perris Fire Station	**Report Page:**	**(Page 6 of 11)**
	Date Prepared:	2/4/2026

I. LIGHTING POWER ALLOWANCE: COMPLETE BUILDING OR AREA CATEGORY METHODS

Corridors	Corridor	0.4	422	168.8	No	No
Offices	Office (<=250 square feet)	0.65	383	249	No	No
comm 2	Electrical Mechancial Telephone Room	0.4	68	27.2	No	No
Lobby	Main Entry Lobby	0.7	194	135.8	No	No
Restroom	Restroom	0.65	80	52	No	No
Offices	Office (<=250 square feet)	0.65	300	195	No	No
Conference Room	Convention, Conference, Multipurpose and Meeting Center	0.75	295	221.2	No	No
Restroom	Restroom	0.65	83	54	No	No
Kitchen	Kitchen/ Food Preparation	0.55	327	179.9	No	No
Storage 10' Ceiling	All Other Space Types	0.4	63	25.2	No	No
Dining	Lounge	0.55	375	206.3	No	No
Day Room	Lounge	0.55	459	252.4	No	No
Office 1	Office (<=250 square feet)	0.65	145	94.2	No	No
Laundry	Laundry	0.45	82	36.9	No	No
Storage 9' Ceiling	All Other Space Types	0.4	72	28.8	No	No
Restroom	Restroom	0.65	72	46.8	No	No
Office 2 & 3	Office (<=250 square feet)	0.65	216	140.4	No	No
Corridors	Corridor	0.4	293	117.2	No	No
Lobby	Main Entry Lobby	0.7	181	126.7	No	No
comm 1	Electrical Mechancial Telephone Room	0.4	68	27.2	No	No
Restrooms	Restroom	0.65	398	258.7	No	No
Exercise	Exercise Center Gymnasium	0.5	574	287	No	No
Corridors	Corridor	0.4	592	236.8	No	No
		TOTALS:	8,618	5,112.9	See Tables J, or P for detail	

Unconditioned Spaces

01	02	03	04	05	06

STATE OF CALIFORNIA
Indoor Lighting
CALIFORNIA ENERGY COMMISSION

CERTIFICATE OF COMPLIANCE		NRCC-LTI-E
Project Name: Perris Fire Station	**Report Page:**	**(Page 4 of 11)**
	Date Prepared:	2/4/2026

F. INDOOR LIGHTING FIXTURE SCHEDULE

Designed Wattage: Unconditioned Spaces

01	02	03	04	05	06	07	08	09	10	
Name or Item Tag	Complete Luminaire Description	Modular (Track) Fixture	Small Aperture & Color Change[1]	Watts per luminaire[2]	How is Wattage determined	Total Number of Luminaires	Excluded per 140.6(a)3 / 170.2(e)2C	Design Watts	Field Inspector	
									Pass	Fail
F1	F1 - LED SURFACE STRIP LIGHT	No	NA	35	Mfr. Spec	14	No	490	☐	☐
F3B	F3B - LED DOWNLIGHT RECESSED	No	NA	7	Mfr. Spec	2	No	14	☐	☐
F5	F5 - LED VAPOR STRIP LIGHT	No	NA	103	Mfr. Spec	20	No	2,060	☐	☐
F6A	F6A - LED LINEAR SURFACED	No	NA	33	Mfr. Spec	5	No	165	☐	☐
						Total Designed Watts: UNCONDITIONED SPACES		2,729		

[1]FOOTNOTE: Design Watts for small aperture and color changing luminaires which qualify per 140.6(a)4B / 170.2(e)2D is adjusted to be 75% /80% of their rated wattage. Table F automatically makes this adjustment, the permit applicant should enter full rated wattage in column 05.

[2]Authority Having Jurisdiction may ask for Luminaire cut sheets to confirm wattage used for compliance per 130.0(c) / 160.5(b). Wattage used must be the maximum rated for the luminaire, not the lamp.

G. MODULAR LIGHTING SYSTEMS

This section does not apply to this project.

H. INDOOR LIGHTING CONTROLS (Not including PAFs)

This table includes lighting controls for conditioned and unconditioned spaces.

Building Level Controls

01	02	03	
Mandatory Demand Response 110.12(c)	Shut-off controls 130.1(c) / 160.5(b)4C	Field Inspector	
		Pass	Fail
Required >= 4,000W subject to multilevel	Whole Building Auto Time Switch	☐	☐

STATE OF CALIFORNIA
Indoor Lighting
CALIFORNIA ENERGY COMMISSION

CERTIFICATE OF COMPLIANCE		NRCC-LTI-E
Project Name: Perris Fire Station	**Report Page:**	**(Page 9 of 11)**
	Date Prepared:	2/4/2026

M. ADDITIONAL LIGHTING ALLOWANCE: TAILORED FLOOR AND TASK LIGHTING

This section does not apply to this project.

N. ADDITIONAL LIGHTING ALLOWANCE: TAILORED DECORATIVE /SPECIAL EFFECTS

This section does not apply to this project.

O. ADDITIONAL LIGHTING ALLOWANCE: TAILORED VERY VALUABLE MERCHANDISE

This section does not apply to this project.

P. POWER ADJUSTMENT: LIGHTING CONTROL CREDIT (POWER ADJUSTMENT FACTOR (PAF))

This section does not apply to this project.

Q. RATED POWER REDUCTION COMPLIANCE FOR ONE-FOR-ONE ALTERATIONS

This section does not apply to this project.

R. 80% LIGHTING POWER FOR ALL ALTERATIONS - CONTROLS EXCEPTIONS

This section does not apply to this project.

S. DAYLIGHT DESIGN POWER ADJUSTMENT FACTOR (PAF)

This section does not apply to this project.

T. DWELLING UNIT LIGHTING

This section does not apply to this project.

STATE OF CALIFORNIA
Indoor Lighting
CALIFORNIA ENERGY COMMISSION

CERTIFICATE OF COMPLIANCE		NRCC-LTI-E
Project Name: Perris Fire Station	**Report Page:**	**(Page 7 of 11)**
	Date Prepared:	2/4/2026

I. LIGHTING POWER ALLOWANCE: COMPLETE BUILDING OR AREA CATEGORY METHODS

Area Description	Complete Building or Area Category Primary Function Area	Allowed Density (W/ft²)	Area (ft²)	Allowed Wattage (Watts)	Additional Allowance / Adjustment	
					Area Category	PAF
Mech/Comm - UNCONDITIONED	Electrical Mechancial Telephone Room	0.4	149	59.6	No	No
Restroom - UNCONDITIONED	Restroom	0.65	102	66.3	No	No
Unconditioned Utility	Laundry	0.45	222	99.9	No	No
Turn Out Gear - UNCONDITIONED	Locker/Dressing Room	0.45	405	182.2	No	No
Unconditioned Electrical	Electrical Mechancial Telephone Room	0.4	235	94	No	No
Apparatus Bay - UNCONDITIONED	Auto Repair	0.55	4,622	2,542.1	Yes	No
Unconditioned Space	All Other Space Types	0.4	107	42.8	No	No
		TOTALS:	5,842	3,086.9	See Tables J, or P for detail	

STATE OF CALIFORNIA
Indoor Lighting
CALIFORNIA ENERGY COMMISSION

CERTIFICATE OF COMPLIANCE		NRCC-LTI-E
Project Name: Perris Fire Station	**Report Page:**	**(Page 3 of 11)**
	Date Prepared:	2/4/2026

F. INDOOR LIGHTING FIXTURE SCHEDULE

This table includes all planned permanent and portable lighting other than dwelling unit/ hotel/ motel room lighting. Multifamily dwelling unit and hotel/motel room lighting is documented in Table T. If using Table T to document lighting in multifamily common use areas providing shared provisions for living, eating, cooking or sanitation, those luminaires are not included here.

Designed Wattage: Conditioned Spaces

01	02	03	04	05	06	07	08	09	10	
Name or Item Tag	Complete Luminaire Description	Modular (Track) Fixture	Small Aperture & Color Change[1]	Watts per luminaire[2]	How is Wattage determined	Total Number of Luminaires	Excluded per 140.6(a)3 / 170.2(e)2C	Design Watts	Field Inspector	
									Pass	Fail
F1	F1 - LED SURFACE STRIP LIGHT	No	NA	35	Mfr. Spec	17	No	595	☐	☐
F10	F10 - LED CONE PENDANT 12"	No	NA	11	Mfr. Spec	3	No	33	☐	☐
F11A	F11A - LED RECESSED 2X2	No	NA	23	Mfr. Spec	19	No	437	☐	☐
F11B	F11B - LED RECESSED 2X2	No	NA	23	Mfr. Spec	39	No	897	☐	☐
F2A	F2A - LED LINEAR UNDERCABINET	No	NA	13	Mfr. Spec	2	No	26	☐	☐
F2B	F2B - LED LINEAR UNDERCABINET	No	NA	13	Mfr. Spec	12	No	156	☐	☐
F3A	F3A - LED DOWNLIGHT RECESSED	No	NA	13	Mfr. Spec	36	No	468	☐	☐
F3B	F3B - LED DOWNLIGHT RECESSED	No	NA	7	Mfr. Spec	23	No	161	☐	☐
F4A	F4A - LED DOWNLIGHT RECESSED	No	NA	13	Mfr. Spec	18	No	234	☐	☐
F7	F7 - LED DOWNLIGHT 6"	No	NA	25	Mfr. Spec	6	No	150	☐	☐
F9	F9 - LED RECESSED 2X4	No	NA	30	Mfr. Spec	31	No	930	☐	☐
F9E	F9E - LED RECESSED 2X4	No	NA	30	Mfr. Spec	5	No	150	☐	☐
						Total Designed Watts: CONDITIONED SPACES		4,237		

1

STK ARCHITECTURE, INC.
42095 ZEVO DR., TEMECULA, CALIFORNIA 92590-3780
Phone: 951.296.9110 Fax: 951.296.6079 Email: stk@stkinc.com

CONSULTANT:
DESIGN WEST ENGINEERING
MECHANICAL / ELECTRICAL / ENERGY CONSULTANTS
BUILDING ENERGY SOLUTIONS INC.

REVIEWED FOR CODE COMPLIANCE

THESE APPROVED DOCUMENTS MUST BE KEPT ON THE JOB SITE AT ALL TIMES AND THE WORK SHALL CONFORM TO THEM AND ALL APPLICABLE CODES AND ORDINANCES. ANY DEVIATIONS FROM THESE APPROVED DOCUMENTS MUST BE APPROVED BY THE BUILDING OFFICIAL IN WRITING PRIOR TO CONSTRUCTION. NOR SHALL ANY CHANGES BE MADE WITHOUT SUCH APPROVAL. THE CONTRACTOR OF RECORD IS RESPONSIBLE FOR ALL CONSTRUCTION AND FOR COMPLIANCE WITH THE APPROVED DOCUMENTS. DEPARTMENT APPROVAL DOES NOT AUTHORIZE VIOLATION OF ANY CODE OR ORDINANCE.

BY: Braden Kempton DATE: 2026-02-04
BUILDING DEPARTMENT

DESIGN WEST ENGINEERING
MECHANICAL / ELECTRICAL / ENERGY CONSULTANTS
BUILDING ENERGY SOLUTIONS INC.

REGISTERED PROFESSIONAL ENGINEER
BRADEN K. KEMPTON
22839
SIGNED 04/24/2026
MECHANICAL & ELECTRICAL
STATE OF CALIFORNIA

PROJECT ADMINISTERED BY:
CITY OF PERRIS

101 NORTH "D" STREET
PERRIS, CA 92570

PROJECT NAME:
SOUTH FIRE STATION AND ADMINISTRATIVE BUILDING

PROJECT CIP: F077

2495 MURRIETA ROAD
PERRIS, CA 92585

ISSUE INFORMATION:

DATE:	INFORMATION:
11-26-25	95% CD SUBMITTAL
02-05-26	1 1st PC RESPONSE
02-19-26	2 2nd PC RESPONSE

SHEET INFORMATION:
STK PROJECT NO.: 365-03-25
SCALE: AS NOTED
DATE: NOVEMBER 2025
PLOT DATE: –
DRAWN BY: JM / JM

SEAL:

SHEET TITLE:
TITLE 24 COMPLIANCE DOCUMENTS (PRESCRIPTIVE INDOOR)

SHEET NO.:
E5.1

25-114

04/24/2026 12:43PM R:\PROJECTS\2025\25-114 perris fire station_CAD\25-114 E T24.dwg

STATE OF CALIFORNIA
Indoor Lighting
CALIFORNIA ENERGY COMMISSION

CERTIFICATE OF COMPLIANCE		NRCC-LTI-E
Project Name: Perris Fire Station	**Report Page:**	**(Page 2 of 11)**
	Date Prepared:	2/4/2026

C. COMPLIANCE RESULTS

If any cell on this table says "DOES NOT COMPLY" or "COMPLIES with Exceptional Conditions" refer to Table D. for guidance.

Lighting in conditioned and unconditioned spaces must not be combined for compliance per 140.6(b)1 / 170.2(e)	Allowed Lighting Power per 140.6(b) / 170.2(e) (Watts)						Adjusted Lighting Power per 140.6(a) / 170.2(e) (Watts)					Compliance Results
	01	02	03	04		05	06	07		08		09
								Adjustments				
	Complete Building 140.6(c)1	Area Category 140.6(c)2 / 170.2(e)4	Area Category Additional 140.6(c)2G / 170.2(e)4Av (+)	Tailored 140.6(c)3 / 170.2(e)4B (+)	=	**Total Allowed** (Watts)	Total Designed (Watts)	PAF Lighting Control Credits 140.6(a)2 / 170.2(e)1B (-)	=	**Total Adjusted** (Watts) *Includes Adjustments		**05 must be >= 08 140.6 / 170.2(e)**
	(See Table I)	(See Table I)	(See Table J)	(See Table K)			(See Table F)	(See Table P)				
Conditioned		5,112.9	0		=	5,113	4,237	0	=	4237		COMPLIES
Unconditioned		3,086.9	924		=	4,011	2,729	0	=	2729		COMPLIES
Controls Compliance (See Table H for Details)												COMPLIES
Rated Power Reduction Compliance (See Table Q for Details)												

D. EXCEPTIONAL CONDITIONS

This table is auto-filled with uneditable comments because of selections made or data entered in tables throughout the form.

E. ADDITIONAL REMARKS

This table includes remarks made by the permit applicant to the Authority Having Jurisdiction.

STATE OF CALIFORNIA
Outdoor Lighting
CALIFORNIA ENERGY COMMISSION

CERTIFICATE OF COMPLIANCE		NRCC-LTO-E
Project Name: Perris Fire Station	**Report Page:**	**(Page 2 of 8)**
	Date Prepared:	2/4/2026

C. COMPLIANCE RESULTS

Results in this table are automatically calculated from data input and calculations in Tables F through N. Note: If any cell on this table says "COMPLIES with Exceptional Conditions" refer to Table D. Exceptional Conditions for guidance or see applicable Table referenced below.

Calculations of Total Allowed Lighting Power (Watts) 140.7 / 170.2(e)6 or 141.0(b)2L / 180.2(b)4Bv												Compliance Results		
01		02		03		04		05		06		07		08	09
General Hardscape Allowance 140.7(d)1 / 170.2(e)6 (See Table I)	+	Per Application 140.7(d)2 / 170.2(e)6 (See Table J)	+	Sales Frontage 140.7(d)2 (See Table K)	+	Ornamental 140.7(d)2 / 170.2(e)6 (See Table L)	+	Per Specific Area 140.7(d)2 / 170.2(e)6 (See Table M)	OR	Existing Power Allowance 141.0(b)2L / 180.2(b)4Bv (See Table N)	=	**Total Allowed** (Watts)	≥	**Total Actual** (Watts)	**07 must be >= 08**
0	+	---	+	---	+	---	+	2,222.5	OR	---	=	2,222	≥	2,222	COMPLIES
Shielding Compliance (See Table G for Details)															N/A
Controls Compliance (See Table H for Details)															Not applicable

D. EXCEPTIONAL CONDITIONS

This table is auto-filled with uneditable comments because of selections made or data entered in tables throughout the form.

E. ADDITIONAL REMARKS

This table includes remarks made by the permit applicant to the Authority Having Jurisdiction.

STATE OF CALIFORNIA
Outdoor Lighting
CALIFORNIA ENERGY COMMISSION

CERTIFICATE OF COMPLIANCE		NRCC-LTO-E
Project Name: Perris Fire Station	**Report Page:**	**(Page 5 of 8)**
	Date Prepared:	2/4/2026

I. LIGHTING POWER ALLOWANCE (per 140.7 / 170.2(e))

This table includes areas using allowance calculations per 140.7 / 170.2(e). General Hardscape Allowance is per Table 140.7-A/Table 170.2-R while "Use it or lose it" Allowances are per Table 140.7-B /Table 170.2-S. Indicate which allowances are being used to expand sections for user input. Luminaires that qualify for one of the "Use it or lose it" allowances shall not qualify for another "Use it or lose it" allowance. Outdoor lighting attached to multifamily buildings and controlled from the inside of a dwelling unit are included in Table H. and are not included here. All other multifamily outdoor lighting is included here.

01					
	"Use it or lose it" Allowance (select all that apply) (select all that apply)				
☐ General Hardscape Allowance Table I (below)	☐ Per Application Table J	☐ Sales Frontage Table K	☐ Ornamental Table L	☒ Per Specific Area Table M	

J. LIGHTING ALLOWANCE: PER APPLICATION

This section does not apply to this project.

K. LIGHTING ALLOWANCE: SALES FRONTAGE

This section does not apply to this project.

L. LIGHTING ALLOWANCE: ORNAMENTAL

This section does not apply to this project.

STATE OF CALIFORNIA
Indoor Lighting
CALIFORNIA ENERGY COMMISSION

CERTIFICATE OF COMPLIANCE		NRCC-LTI-E
This document is used to demonstrate compliance with requirements in 110.9, 110.12(c), 130.0, 130.1, 140.6 and 141.0(b)2 for indoor lighting scopes using the prescriptive path for nonresidential and hotel/motel occupancies. It is also used to document compliance with requirements in 160.5, 170.2(e) and 180.2(b)4 for indoor lighting scopes using the prescriptive path for multifamily occupancies. Multifamily includes dormitory and senior living facilities.		
Project Name: Perris Fire Station	**Report Page:**	**(Page 1 of 11)**
Project Address: 101 North D Street	**Date Prepared:**	2/4/2026

A. GENERAL INFORMATION

01	Project Location (city)	Perris	04	Total Conditioned Floor Area (ft²)	8,618
02	Climate Zone	10	05	Total Unconditioned Floor Area (ft²)	5,842
03	Occupancy Types Within Project (select all that apply):		06	# of Stories (Habitable Above Grade)	1

● Gymnasium ● Hotel/Motel ● Office ● Support Areas ● All Other Occupancies

B. PROJECT SCOPE

This table includes any lighting systems that are within the scope of the permit application and are demonstrating compliance using the prescriptive path outlined in 140.6 / 170.2(e) or 141.0(b)2 / 180.2(b)4 for alterations.

Scope of Work	Conditioned Spaces		Unconditioned Spaces	
01	02	03	04	05
My Project Consists of (check all that apply):	Calculation Method	Area (ft²)	Calculation Method	Area (ft²)
☒ New Lighting System	Area Category Method	8618	Area Category Method	5842
☐ New Lighting System - Parking Garage				
Total Area of Work (ft²)	8618		5842	

STATE OF CALIFORNIA
Outdoor Lighting
CALIFORNIA ENERGY COMMISSION

CERTIFICATE OF COMPLIANCE		NRCC-LTO-E
Project Name: Perris Fire Station	**Report Page:**	**(Page 3 of 8)**
	Date Prepared:	2/4/2026

F. OUTDOOR LIGHTING FIXTURE SCHEDULE

For new or altered lighting systems demonstrating compliance with 140.7 / 170.2(e)6 all new luminaires being installed and any existing luminaires remaining or being moved within the spaces covered by the permit application are included in the Table below. For altered lighting systems using the Existing Power method per 141.0(b)2L only new luminaires being installed and replacement luminaires being installed as part of the project scope are included (ie, existing luminaires remaining or existing luminaires being moved are not included). Outdoor lighting attached to multifamily buildings and controlled from the inside of a dwelling unit are included in Table H. and are not included here. All other multifamily outdoor lighting is included here.

Designed Wattage:

01	02		03	04	05	06	07	08	09	10	
Name or Item Tag	Complete Luminaire Description		Watts per luminaire[1, 2]	How is Wattage determined	Total Number Luminaires[2]	Luminaire Status[3]	Excluded per 140.7(a) / 170.2(e)6A	Design Watts	Cutoff Req. -> 6,200 initial lumen output 130.2(b) / 160.5(c)1[4]	Field Inspector	
										Pass	Fail
F4B	F4B - LED ROUND DOWNLIGHT	☐ Linear	17.5	Mfr. Spec	17	New	☐	297.5	NA: < 6200 lumens	☐	☐
S1	S1 - LED ARCH TRAPAZODAL WALL	☐ Linear	22.5	Mfr. Spec	4	New	☐	90	NA: < 6200 lumens	☐	☐
S2A	S2A - LED POLETOP TYPE 4	☐ Linear	137	Mfr. Spec	5	New	☐	685	NA: < 6200 lumens	☐	☐
S2B	F4B - LED ROUND DOWNLIGHT	☐ Linear	17.5	Mfr. Spec	2	New	☐	35	NA: < 6200 lumens	☐	☐
S3	S3 - LED ARCH SCONCE	☐ Linear	33.6	Mfr. Spec	29	New	☐	974.4	NA: < 6200 lumens	☐	☐
S5	S5 - LED ARCH SCONCE	☐ Linear	19	Mfr. Spec	2	New	☐	38	NA: < 6200 lumens	☐	☐
S8	S8 - LED 4' SURFACE VAPOR TIGHT	☐ Linear	34.2	Mfr. Spec	3	New	☐	102.6	NA: < 6200 lumens	☐	☐
							Total Design Watts:	2222			

* NOTES: Selections with a * require a note in the space below explaining how compliance is achieved.
EX: Luminaire is lighting a statue; EXCEPTION 2 to 130.2(b)

[1] *FOOTNOTES: Authority Having Jurisdiction may ask for Luminaire cut sheets to confirm wattage used for compliance per 130.0(c) / 160.5(b)*
[2] *For linear luminaires, wattage should be indicated as W/lf instead of Watts/luminaire. Total linear feet should be indicated in column 05 instead of number of luminaires.*

STATE OF CALIFORNIA
Outdoor Lighting
CALIFORNIA ENERGY COMMISSION

CERTIFICATE OF COMPLIANCE		NRCC-LTO-E
Project Name: Perris Fire Station	**Report Page:**	**(Page 6 of 8)**
	Date Prepared:	2/4/2026

M. LIGHTING ALLOWANCE: PER SPECIFIC AREA

This table includes areas using the wattage allowance per specific area from Table 140.7-B /Table 170.2-S. More than one specific area allowance may be taken in a single project, if applicable. However, multiple specific area allowances may not be taken for the exact same area on the site.

01	02	03	04	05	06	07	08	09	10
Area Description	Specific Area Type per Table 140.7-B	**CALCULATED ALLOWANCE (Watts)**			**DESIGN WATTS**				Additional Allowance (Watts)
		Specific Area (ft²)[1]	Allowed Density (W/ft²)	Extra Allowance (Watts)	Luminaire Name or Item Tag	Watts per Luminaire	# of Luminaires	Design Watts	
Exterior Overall	ServiceStationHardscape	60644	0.1	4123.8	S1	22.5	4	90	2222.5
					S2A	137	5	685	
					S2B	17.5	2	35	
					S3	33.6	29	974.4	
					S5	19	2	38	
					S8	34.2	3	102.6	
					F4B	17.5	17	297.5	
					Total Design Watts for this Area:			2222.5	
					Total Allowance (Watts) All Areas:			2222.5	

[1] *FOOTNOTES: See Table 140.7-B /Table 170.2-S for rules for calculating the specific areas (ft²) for these additional lighting allowances.*
[2] *For luminaires indicated in Table F as linear, wattage in column 07 is W/lf instead of Watts/luminaire. Total linear feet should be indicated in column 08 instead of number of luminaires.*

N. EXISTING CONDITIONS POWER ALLOWANCE (alterations only)

This section does not apply to this project.

STATE OF CALIFORNIA
Outdoor Lighting
CALIFORNIA ENERGY COMMISSION

CERTIFICATE OF COMPLIANCE		NRCC-LTO-E
This document is used to demonstrate compliance with requirements in 110.9, 130.0, 130.2, 140.7, and 141.0(b)2L for outdoor lighting scopes using the prescriptive path for nonresidential and hotel/motel occupancies. It is also used to document compliance with requirements in 160.5, 170.2(e)6, 180.1(a) and 180.2(b)4Bv for outdoor lighting scopes using the prescriptive path for multifamily and mixed-use occupancies. Multifamily includes dormitory and senior living facilities.		
Project Name: Perris Fire Station	**Report Page:**	**(Page 1 of 8)**
Project Address: 101 North D Street	**Date Prepared:**	2/4/2026

A. GENERAL INFORMATION

01	Project Location (city)	Perris	04	Total Illuminated Hardscape Area (ft²)	0
02	Climate Zone	10			
03	Outdoor Lighting Zone per Title 24 Part 1 10.114 or as designated by Authority Having Jurisdiction (AHJ):				
☐	LZ-0: Very Low - Undeveloped Parkland	☒ LZ-2: Moderate - Urban Clusters	☐	LZ-4: High - Must be reviewed by CA Energy Commission for Approval	
☐	LZ-1: Low - Rural Areas	☐ LZ-3: Moderately High - Urban Areas			
05	Occupancy Types within Project				

● Gymnasium ● Hotel/Motel ● Office ● Support Areas ● All Other Occupancies

B. PROJECT SCOPE

This table includes outdoor lighting systems that are within the scope of the permit application and are demonstrating compliance using the prescriptive path outlined in 140.7 / 170.2(e)6 or 141.0(b)2L / 180.2(b)4Bv for alterations.

My Project Consists of:

01	02	
☒	New Lighting System	Must Comply with Allowances from 140.7 / 170.2(e)6
☐	Altered Lighting System	Is your alteration increasing the connected lighting load (Watts)? ○ Yes ○ No

03	04	05
% of Existing Luminaires Being Altered[1]	Sum Total of Luminaires Being Added or Altered	Calculation Method
☐ < 10% ☐ >= 10% and < 50% ☐ >= 50%		

Please proceed to Table F. Outdoor Lighting Fixture Schedule to define the project's luminaires.

[1] *FOOTNOTES: % of Existing Luminaires Being Altered = (Sum Total of Luminaires Being Added or Altered / Existing Luminaires within the Scope of the Permit Application) x 100.*

STATE OF CALIFORNIA
Outdoor Lighting
CALIFORNIA ENERGY COMMISSION

CERTIFICATE OF COMPLIANCE		NRCC-LTO-E
Project Name: Perris Fire Station	**Report Page:**	**(Page 4 of 8)**
	Date Prepared:	2/4/2026

F. OUTDOOR LIGHTING FIXTURE SCHEDULE

For new or altered lighting systems demonstrating compliance with 140.7 / 170.2(e)6 all new luminaires being installed and any existing luminaires remaining or being moved within the spaces covered by the permit application are included in the Table below. For altered lighting systems using the Existing Power method per 141.0(b)2L only new luminaires being installed and replacement luminaires being installed as part of the project scope are included (ie, existing luminaires remaining or existing luminaires being moved are not included). Outdoor lighting attached to multifamily buildings and controlled from the inside of a dwelling unit are included in Table H. and are not included here. All other multifamily outdoor lighting is included here.

Designed Wattage:

01	02	03	04	05	06	07	08	09	10

[1] *Select "New" for new luminaires in a new outdoor lighting project, or for added luminaires in an alteration. Select "Altered" for replacement luminaires in an alteration. Select "Existing to Remain" for existing luminaires within the project scope that are not being altered and are remaining. Select "Existing Reinstalled" for existing luminaires which are being removed and reinstalled as part of the project scope.*
[4] *Compliance with mandatory shielding requirements is required for luminaires with initial lumen output >= 6,200 unless exempted by 130.2(b)/ 160.5(c)*

G. SHIELDING REQUIREMENTS (BUG)

This section does not apply to this project.

H. OUTDOOR LIGHTING CONTROLS

This table demonstrates compliance with controls requirements for all new or altered luminaires installed as part of the permit application. For alteration projects, luminaires which are existing to remain (ie untouched) and luminaires which are removed and reinstalled (wiring only) do not need to be included in this table even if they are within the spaces covered by the permit application.
Outdoor lighting for nonresidential buildings, parking garages and common service areas in multifamily buildings must be documented separately from outdoor lighting attached to multifamily buildings and controlled from the inside of a dwelling unit

Mandatory Controls for Nonresidential Occupancies, Parking Garages & Common Areas in Multifamily Buildings

01	02	03	04	05	
Area Description	Shut-Off 130.2(c)1 / 160.5(c)	Auto-Schedule 130.2(c)2 / 160.5(c)	Motion Sensor 130.2(c)3 / 160.5(c)	Field Inspector	
				Pass	Fail

[1] *FOOTNOTE: Text has been abbreviated, please refer to Table 160.5-A to confirm compliance with the specific light source technologies listed.*
[2] *Authority having jurisdiction may ask for cutsheets or other documentation to confirm compliance of light source.*
[3] *Recessed luminaires marked for use in fire-rated installations, and recessed luminaires installed in non-insulated ceilings are excepted from ii and iii.*

STATE OF CALIFORNIA
Outdoor Lighting
CALIFORNIA ENERGY COMMISSION

CERTIFICATE OF COMPLIANCE		NRCC-LTO-E
Project Name: Perris Fire Station	**Report Page:**	**(Page 7 of 8)**
	Date Prepared:	2/4/2026

O. DECLARATION OF REQUIRED CERTIFICATES OF INSTALLATION

Selections have been made based on information provided in this document. If any selection has been changed by permit applicant, an explanation should be included in Table E. Additional Remarks. These documents must be provided to the building inspector during construction and can be found online

Form/Title
NRCI-LTO-E - Must be submitted for all buildings

P. DECLARATION OF REQUIRED CERTIFICATES OF ACCEPTANCE

There are no NRCA forms required for this project.

STK ARCHITECTS, INC.
42095 ZEVO DR., TEMECULA, CALIFORNIA 92590-3780
Phone: 951.296.9110 Fax: 951.296.6079 Email: stk@stkinc.com

CONSULTANT:

REVIEWED FOR CODE COMPLIANCE

THESE DRAWINGS AND DOCUMENTS SHALL BEST REVIEWED AND FOUND TO BE IN CONFORMANCE WITH THE 2022 CALIFORNIA BUILDING CODES. ALL CONSTRUCTION SHALL BE SUBJECT TO INSPECTIONS BY THE LOCAL ENFORCEMENT AGENCY AND ALL REQUIREMENTS SHALL BE CORRECTED TO THEIR SATISFACTION. THE APPROVAL OF THESE DRAWINGS AND DOCUMENTS DOES NOT AUTHORIZE THE VIOLATION OF ANY CODE OR REGULATION. CONTRACTOR SHALL VERIFY ALL DIMENSIONS AND CONDITIONS AT THE JOB SITE AND NOTIFY THE ARCHITECT OF ANY DISCREPANCIES BEFORE PROCEEDING WITH THE WORK. DO NOT SCALE DRAWINGS. CONTRACTOR SHALL COORDINATE ALL WORK WITH THAT OF ALL OTHER TRADES. THESE DRAWINGS AND DOCUMENTS ARE THE PROPERTY OF THE ARCHITECT AND SHALL NOT BE REPRODUCED IN WHOLE OR IN PART WITHOUT THE WRITTEN PERMISSION OF THE ARCHITECT. © COPYRIGHT STK ARCHITECTS, INC.

DESIGN WEST ENGINEERING
MECHANICAL ELECTRICAL ENERGY CONSULTANTS
PLUMBING FIRE PROTECTION
SOLUTIONS INC.

REGISTERED PROFESSIONAL ENGINEER
GLENN R. KLOTZ
22839
SIGNED 04/24/2026
ELECTRICAL
STATE OF CALIFORNIA

PROJECT ADMINISTERED BY:
CITY OF PERRIS

101 NORTH "D" STREET
PERRIS, CA 92570

PROJECT NAME:
SOUTH FIRE STATION AND ADMINISTRATIVE BUILDING

PROJECT CIP: F077

2495 MURRIETA ROAD
PERRIS, CA 92585

ISSUE INFORMATION:

DATE:	INFORMATION:
11-26-25	95% CD SUBMITTAL
02-05-26	1 1st PC RESPONSE
02-19-26	2 2nd PC RESPONSE

SHEET INFORMATION:
STK PROJECT NO.: 365-03-25
SCALE: AS NOTED
DATE: NOVEMBER 2025
PLOT DATE: –
DRAWN BY: JM / JM
SEAL:

SHEET TITLE:
TITLE 24 COMPLIANCE DOCUMENTS (PRESCRIPTIVE OUTDOOR)

SHEET NO.:
E5.2

02/24/2026 12:48PM R:_PROJECTS\2025\25-114 perris fire station_CA\CAD\25-114 E7.2.dwg

STATE OF CALIFORNIA

Outdoor Lighting

CALIFORNIA ENERGY COMMISSION

CERTIFICATE OF COMPLIANCE			NRCC-LTO-E
Project Name: Perris Fire Station		**Report Page:**	**(Page 8 of 8)**
Project Address:	101 North D Street	**Date Prepared:**	2/4/2026

DOCUMENTATION AUTHOR'S DECLARATION STATEMENT	
I certify that this Certificate of Compliance documentation is accurate and complete.	
Documentation Author Name: Braden Kempton	Documentation Author Signature: Braden Kempton
Company: Design West Engineering	Signature Date: 2026-02-04
Address: 412 East Vanderbilt Way	CEA/ HERS Certification Identification (if applicable): 22839
City/State/Zip: San Bernardino CA 92408	Phone: 909-890-3700

RESPONSIBLE PERSON'S DECLARATION STATEMENT

I certify the following under penalty of perjury, under the laws of the State of California:

1. The information provided on this Certificate of Compliance is true and correct.
2. I am eligible under Division 3 of the Business and Professions Code to accept responsibility for the building design or system design identified on this Certificate of Compliance (responsible designer)
3. The energy features and performance specifications, materials, components, and manufactured devices for the building design or system design identified on this Certificate of Compliance conform to the requirements of Title 24, Part 1 and Part 6 of the California Code of Regulations.
4. The building design features or system design features identified on this Certificate of Compliance are consistent with the information provided on other applicable compliance documents, worksheets, calculations, plans and specifications submitted to the enforcement agency for approval with this building permit application.
5. I will ensure that a completed signed copy of this Certificate of Compliance shall be made available with the building permit(s) issued for the building, and made available to the enforcement agency for all applicable inspections. I understand that a completed signed copy of this Certificate of Compliance is required to be included with the documentation the builder provides to the building owner at occupancy.

Responsible Designer Name: Braden Kempton	Responsible Designer Signature: Braden Kempton
Company: Design West Engineering	Date Signed: 2026-02-04
Address: 412 East Vanderbilt Way	License: 22839
City/State/Zip: San Bernardino CA 92408	Phone: 909-890-3700

STATE OF CALIFORNIA

Electrical Power Distribution

CALIFORNIA ENERGY COMMISSION

CERTIFICATE OF COMPLIANCE		NRCC-ELC-E
Project Name: Perris Fire Station	**Report Page:**	**(Page 3 of 6)**
	Date Prepared:	2/4/2026

G. SEPARATION OF ELECTRICAL CIRCUITS FOR ENERGY MONITORING

This table includes entirely new or complete replacement electrical power distribution systems to demonstrate compliance with 130.5(b)/ 160.6(b). Any load types that are not included in the service do not need to be shown. For multifamily occupancies, submetered systems that provide power to dwelling units do not need to meet these separation requirements and therefore load types on those submetered systems also do not need to be shown.

01	02	03	04	05	
Load Type per Table 130.5-B[1]	Minimum Required Separation of Load per Table 130.5-B	Compliance Method[2]	Location of Requirements in Construction Documents	Field Inspector	
				Pass	Fail
SCE UTILITY TRANSFORMER					
Lighting including exit, egress and exterior	All lighting disaggregated by floor, type or area	NA: New or replacement service meter only	E-Sheets	☐	☐
HVAC systems and components	All HVAC in aggregate and each HVAC load rated at least 50 kVA	NA: New or replacement service meter only	E-Sheets	☐	☐
Domestic and service water systems	All loads in aggregate	NA: New or replacement service meter only	E-Sheets	☐	☐
Plug Loads and appliances less than 25kVA	All plug loads separated by floor, type or area Groups of plug loads exceeding 25 kVA connected load in an area less than 5000 sf	NA: New or replacement service meter only	E-Sheets	☐	☐
Renewable power sources (net or total)	Each group	NA: New or replacement service meter only	E-Sheets	☐	☐
Charging stations for electrical vehicle	All loads in aggregate	NA: New or replacement service meter only	E-Sheets	☐	☐

STATE OF CALIFORNIA

Electrical Power Distribution

CALIFORNIA ENERGY COMMISSION

CERTIFICATE OF COMPLIANCE			NRCC-ELC-E
Project Name: Perris Fire Station		**Report Page:**	**(Page 6 of 6)**
Project Address:	101 North D Street	**Date Prepared:**	2/4/2026

DOCUMENTATION AUTHOR'S DECLARATION STATEMENT	
I certify that this Certificate of Compliance documentation is accurate and complete.	
Documentation Author Name: Braden Kempton	Documentation Author Signature: Braden Kempton
Company: Design West Engineering	Signature Date: 2026-02-04
Address: 412 East Vanderbilt Way	CEA/ HERS Certification Identification (if applicable): 22839
City/State/Zip: San Bernardino CA 92408	Phone: 909-890-3700

RESPONSIBLE PERSON'S DECLARATION STATEMENT

I certify the following under penalty of perjury, under the laws of the State of California:

1. The information provided on this Certificate of Compliance is true and correct.
2. I am eligible under Division 3 of the Business and Professions Code to accept responsibility for the building design or system design identified on this Certificate of Compliance (responsible designer)
3. The energy features and performance specifications, materials, components, and manufactured devices for the building design or system design identified on this Certificate of Compliance conform to the requirements of Title 24, Part 1 and Part 6 of the California Code of Regulations.
4. The building design features or system design features identified on this Certificate of Compliance are consistent with the information provided on other applicable compliance documents, worksheets, calculations, plans and specifications submitted to the enforcement agency for approval with this building permit application.
5. I will ensure that a completed signed copy of this Certificate of Compliance shall be made available with the building permit(s) issued for the building, and made available to the enforcement agency for all applicable inspections. I understand that a completed signed copy of this Certificate of Compliance is required to be included with the documentation the builder provides to the building owner at occupancy.

Responsible Designer Name: Braden Kempton	Responsible Designer Signature: Braden Kempton
Company: Design West Engineering	Date Signed: 2026-02-04
Address: 412 East Vanderbilt Way	License: 22839
City/State/Zip: San Bernardino CA 92408	Phone: 909-890-3700

STATE OF CALIFORNIA

Electrical Power Distribution

CALIFORNIA ENERGY COMMISSION

CERTIFICATE OF COMPLIANCE NRCC-ELC-E

This document is used to demonstrate compliance with mandatory requirements in 130.5, for electrical systems in newly constructed nonresidential and hotel/motel occupancies and 160.6 and 160.9 for electrical systems in newly constructed multifamily occupancies. Additions and alterations to electrical service systems in nonresidential and hotel/motel occupancies will also use this document to demonstrate compliance per 141.0(a) or 141.0(b)2P for alterations. For multifamily addition or alterations compliance will be documented per 180.1(a) or 180.2 (b)4Bvii

Project Name: Perris Fire Station		**Report Page:**	**(Page 1 of 6)**
Project Address:	101 North D Street	**Date Prepared:**	2/4/2026

A. GENERAL INFORMATION

01	Project Location (city)	Perris	02	Climate Zone	10
			03	Occupancy Types Within Project:	All Other OccupanciesGymnasiumHotel/MotelOfficeSupport Areas

B. PROJECT SCOPE

This table includes electrical systems that are within the scope of the permit application.

01	02	03	04	05	06	07
Electrical Service Designation/ Description	Scope of Work[1]	Rating[2] (kVA)	Utility Provided Metering System Exception to 130.5(a)/ 160.6(a)[3]	System subject to CA Elec Code Article 517 Exception to 130.5(a)and (b)	Demand Response Controls	Provides power to dwelling units/common living areas only in multifamily occupancy
SCE UTILITY TRANSFORMER	New electrical service equipment and meter	1250	☐	☐	Where required, demand response controls must be specified which are capable of receiving and automatically responding to at least one standards based messaging protocol which enables demand response after receiving a demand response signal. Sections 120.2/ 160.3, 130.1/ 160.5, and 130.3/ 160.5, and mechanical, indoor lighting, and sign lighting Certificate of Compliance documents will indicate when demand response controls are required.	☐

[1]FOOTNOTES: Adding only new feeders and branch circuits triggers Voltage Drop 130.5(c)/160.6(c), no other requirements from 130.5/160.6 are required.
[2] If common use areas in a multifamily are submetered, rating is for submeter size serving common use areas.
[3] Applicable if the utility company is providing a metering system that indicates instantaneous kW demand and kWh for a utility-defined period.

STATE OF CALIFORNIA

Electrical Power Distribution

CALIFORNIA ENERGY COMMISSION

CERTIFICATE OF COMPLIANCE		NRCC-ELC-E
Project Name: Perris Fire Station	**Report Page:**	**(Page 4 of 6)**
	Date Prepared:	2/4/2026

G. SEPARATION OF ELECTRICAL CIRCUITS FOR ENERGY MONITORING

This table includes entirely new or complete replacement electrical power distribution systems to demonstrate compliance with 130.5(b)/ 160.6(b). Any load types that are not included in the service do not need to be shown. For multifamily occupancies, submetered systems that provide power to dwelling units do not need to meet these separation requirements and therefore load types on those submetered systems also do not need to be shown.

01	02	03	04	05	
Load Type per Table 130.5-B[1]	Minimum Required Separation of Load per Table 130.5-B	Compliance Method[2]	Location of Requirements in Construction Documents	Field Inspector	
				Pass	Fail

** NOTES: If "Other*" is selected under Compliance Method above, please indicate how compliance has been achieved in the space provided below.*

[1] FOOTNOTES: For each separate load type, up to 10% of the connected load may be of any type.
[2] Method 1: Switchboards/ motor control centers/ panelboard loads disaggregated for each load type.
Method 2: Switchboards/ motor control centers/ panelboard supply other distribution equipment with loads disaggregated for each load type.
Method 3: Branch circuits serve load types individually and provisions for adding future branch circuit monitoring.
Method 4: Complete metering system measures and reports loads by type.
See Chapter 8 of the Nonresidential Compliance Manual for more detail on Compliance Methods.

H. VOLTAGE DROP

This table includes entirely new or complete replacement electrical power distribution systems, or alterations that add, modify or replace both feeders and branch circuits to demonstrate compliance with 130.5(c)/ 160.6(c). For alterations, only the altered circuits must demonstrate compliance per 141.0(b)2Piii/ 180.2(b)4Bviic.

01	02				03	04	05	
Electrical Service Designation/Description	Combined Voltage Drop on Installed Feeder/Branch Circuit Conductors Compliance Method				Location of Voltage Drop Calculations[1]	Sheet Number for Voltage Drop Calculations in Construction Documents	Field Inspector	
							Pass	Fail
SCE UTILITY TRANSFORMER	☒	Voltage drop less than 5%	☐	Permitted by CA Elec Code (Exception to 130.5(c))*	In construction documents	E0.3	☐	☐

** NOTES: If "Permitted by CA Elec Code *" is selected under Compliance Method above, please indicate where the exception applies in the space provided below.*

[1] FOOTNOTES: Voltage drop calculations may be attached to the permit application outside the construction documents if allowed by the Authority Having Jurisdiction. Select "attached" if applicable. If calculations will be the responsibility of the installing contractor, select "Contractor Responsible".

I. CIRCUIT CONTROLS FOR 120-VOLT RECEPTACLES AND CONTROLLED RECEPTACLES

This table includes entirely new or complete replacement electrical power distribution systems to demonstrate compliance with 130.5(d)/ 160.6(d).. Both controlled and uncontrolled receptacles must be provided in office areas, lobbies, conference rooms, kitchen areas in office spaces, copy rooms and hotel/motel guest rooms.

STATE OF CALIFORNIA

Electrical Power Distribution

CALIFORNIA ENERGY COMMISSION

CERTIFICATE OF COMPLIANCE		NRCC-ELC-E
Project Name: Perris Fire Station	**Report Page:**	**(Page 2 of 6)**
	Date Prepared:	2/4/2026

C. COMPLIANCE RESULTS

Results in this table are automatically calculated from data input and calculations in Tables F through J. Note: If any cell on this table says "COMPLIES with Exceptional Conditions" refer to Table D. Exceptional Conditions for guidance or see applicable Table referenced below.

01		02		03		04	05	06
Service Electrical Metering 130.5(a)/ 160.6(a) (See Table F)	AND	Separation for Monitoring 130.5(b)/ 160.6(b) (See Table G)	AND	Voltage Drop 130.5(c)/ 160.6(c) (See Table H)	AND	Controlled Receptacles 130.5(d)/ 160.6(d) (See Table I)	Electric Ready 160.9 (See Table J)	**Compliance Results**
Yes	AND	Yes	AND	Yes	AND	Yes		COMPLIES

D. EXCEPTIONAL CONDITIONS

This table is auto-filled with uneditable comments because of selections made or data entered in tables throughout the form.

E. ADDITIONAL REMARKS

This table includes remarks made by the permit applicant to the Authority Having Jurisdiction.

F. SERVICE ELECTRICAL METERING

This table includes new or replacement electrical service systems OR equipment to demonstrate compliance with 130.5(a) / 160.6(a). For multifamily occupancies, submetered systems that provide power to common use areas must meet the following metering requirements. Submetered systems providing power to dwelling units do not.

01	02	03				04	05	
Electrical Service Designation/ Description	Rating[1] (kVA)	Required Metering Capabilities per Table 130.5-A				Location of Requirements in Construction Documents	Field Inspector	
		Instantaneous Demand (kW)	Historical Peak Demand (kW)	Tracking kWh for user-defined period	kWh per rate period		Pass	Fail
SCE UTILITY TRANSFORMER	1250	☒	☒	☒	☒	E5.3	☐	☐

[1] FOOTNOTES: If common use areas in a multifamily are submetered, rating is for submeter size serving common use areas.

STATE OF CALIFORNIA

Electrical Power Distribution

CALIFORNIA ENERGY COMMISSION

CERTIFICATE OF COMPLIANCE		NRCC-ELC-E
Project Name: Perris Fire Station	**Report Page:**	**(Page 5 of 6)**
	Date Prepared:	2/4/2026

I. CIRCUIT CONTROLS FOR 120-VOLT RECEPTACLES AND CONTROLLED RECEPTACLES

01	02	03	04	05	06	07	
Room name or Description	Location/ Type of Controlled Receptacles[1]	Shut-Off Controls	Demand Responsive Controls	Permanent Durable Marking Will be Used	Location of Requirements in Construction Documents	Field Inspector	
						Pass	Fail
All offices	Within 6ft of uncontrolled receptacle	Occupancy Sensor	NA: Building does not require demand responsive lighting controls per 110.12(c)	☒		☐	☐

** NOTES: If "Other*" is selected under Shut-Off Controls above, please indicate how compliance has been achieved in the space provided below.*

[1] FOOTNOTES: Receptacles dedicated to refrigerators and water dispensers in kitchens, located a minimum of 6ft above the floor specifically for clocks, network copiers, fax machines, A/V and data equipment other than personal computers in copy rooms, circuits rated more than 20 Amps, or connected to a UPS that are intended to be in continuous use and are marked to differentiate them from other receptacles or circuits are excepted from the requirements. .

J. ELECTRIC READY BUILDINGS

This section does not apply to this project.

K. DECLARATION OF REQUIRED CERTIFICATES OF INSTALLATION

Selections have been made based on information provided in this document. If any selection have been changed by permit applicant, an explanation should be included in Table E. Additional Remarks. These documents must be provided to the building inspector during construction and can be found online

Form/Title
NRCI-ELC-E - Must be submitted for all buildings

1

STK ARCHITECTURE, INC.
42095 ZEVO DR., TEMECULA, CALIFORNIA 92590-3780
Phone: 951.296.9110 Fax: 951.296.6079 Email: stk@stkinc.com

CONSULTANT:

REVIEWED FOR CODE COMPLIANCE

DESIGN WEST ENGINEERING
MECHANICAL • ELECTRICAL • ENERGY CONSULTANTS
BUILDING BUREAU SOLUTIONS INC.

REGISTERED PROFESSIONAL ENGINEER
BRADEN KEMPTON
22839
SIGNED:04/24/2026
ELECTRICAL
STATE OF CALIFORNIA

PROJECT ADMINISTERED BY:

CITY OF PERRIS

101 NORTH "D" STREET
PERRIS, CA 92570

PROJECT NAME:

SOUTH FIRE STATION AND ADMINISTRATIVE BUILDING

PROJECT CIP: F077

2495 MURRIETA ROAD
PERRIS, CA 92585

ISSUE INFORMATION:

DATE:	INFORMATION:
11-26-25	95% CD SUBMITTAL
02-05-26	1 1st PC RESPONSE
02-19-26	2 2nd PC RESPONSE

SHEET INFORMATION:

STK PROJECT NO.:	365-03-25
SCALE:	AS NOTED
DATE:	NOVEMBER 2025
PLOT DATE:	–
DRAWN BY:	JM / JM

SEAL:

SHEET TITLE:

TITLE 24 COMPLIANCE DOCUMENTS (PRESCRIPTIVE POWER DISTRIBUTION)

SHEET NO.:

E5.3

25-114

R:_PROJECT\2025\25-114 perris fire station_CAD\25-114 E-T24.dwg
04/24/2026 12:45PM

CERTIFICATE OF COMPLIANCE			**NRCC-SAB-E**

This document is used to demonstrate compliance with prescriptive PV and battery requirements in §140.10/§170.2 for nonresidential, multifamily and mixed-use buildings and prescriptive solar thermal requirements in §170.2(d)3C for multifamily and hotel/ motel occupancies. When PV/battery/solar thermal requirements don't apply or are traded using the performance approach, this document demonstrates compliance with mandatory solar readiness requirements in §110.10/ §160.8 for newly constructed buildings which are either multifamily ten stories or fewer, hotel/motel ten stories or fewer or all other nonresidential buildings three stories or fewer. It is also used to demonstrate compliance with solar readiness in §110.10/ §160.8 for additions to nonresidential, multifamily or hotel/motel building types which add more than 2,000 ft² of roof area. Alterations, or additions of less than 2,000 ft² of roof area, are not required to comply with solar readiness, solar PV and battery requirements and do not need to complete this document.

Project Name: Perris Fire Station		**Report Page:**	**(Page 1 of 6)**
Project Address:	101 North D Street	**Date Prepared:**	4/13/2026

A. GENERAL INFORMATION

01	Project Location (city)	Perris	04	Building Occupancies	All Other OccupanciesHotel/MotelOfficeSports and RecreationSupport Areas
02	Climate Zone	10	05	Construction Type	New construction
03	Square Footage of Building (ft²)	9844	06	Number of Stories	Bldg <= 3 stories

B. PROJECT SCOPE

The compliance path the project is using to comply per §110.10(b)1B/ §140.10/ §170.2(g and h) is indicated below.

Compliance with Solar Photovoltaic (PV) and Battery Requirements in §140.10/ §170.2(g and h)

	01	
☐	Provided PV system and battery storage sized per §140.10/ §170.2 (g and h)	The project has included an installed PV system and battery storage system per requirements in §140.10/ §170.2(g and h) as documented in Table J.
☐	Exception to PV and Battery: Not enough Solar Access Roof Area	The total of all available Solar Access Roof Area(s) of the project site is less than three percent of the conditioned floor area as documented in Table J per Exception 1 to Section 140.10(a) & Exception 1 to Section 170.2(g)..
☐	Exception to PV and Battery: Required PV < 4kW	The required PV system capacity is less than 4 kW dc as documented in Table J per Exception 2 to Section 140.10(a) & Exception 2 to Section 170.2(g).
☐	Exception to PV and Battery: No contiguous Solar Access Roof Area	The Solar Access Roof Area(s) of the project site contains less than 80 contiguous square feet as documented in Table J per Exception 3 to Section 140.10(a) & Exception 3 to Section 170.2(g).
☐	Exception to PV and Battery: Can't meet snow load	The project has a roof design where the enforcement authority has verified it is not possible for the PV system, including panels, modules, components, supports, and attachments to the roof structure, to meet ASCE 7-16 Chapter 7, Snow Loads per Exception 4 to Section 140.10(a) & Exception 4 to 170.2(g).
☐	Exception to PV and Battery: Multifamily without virtual energy credits	The project is a multifamily building in an area where a load serving entity does not provide a program where PV generation is compensated through virtual energy bill credits. Also, there is no community solar program and the utility does not support a virtual energy bill program per exception 5 to 170.2(g).

CERTIFICATE OF COMPLIANCE			**NRCC-SAB-E**
Project Name: Perris Fire Station		**Report Page:**	**(Page 2 of 6)**
		Date Prepared:	4/13/2026

Compliance with Solar Thermal Water Heating Requirements in §170.2(d)2Bii (Multifamiily and hotel/ motel occupancies only)

	01
☐	The project includes a hotel/motel or multifamily occupancy with a gas or propane central water-heating system (serves 2+ dwelling units) and includes a permanently installed domestic solar water-heating system to comply with §170.2(d)2Bii and Reference Residential Appendix RA4, as documented in Table H. Compliance meets Exception 2 to solar ready requirements in §110.10(b).

C. COMPLIANCE RESULTS

Results in this table are automatically calculated from data input and calculations in Tables F through I. Note: If any cell on this table says "DOES NOT COMPLY" or "COMPLIES with Exceptional Conditions" refer to Table D. for guidance or see the applicable Table referenced below.

Allocated Solar Zone				Installed PV System				Installed SWH System				Smart Tstat and Alternative EE Measure		Compliance Results
01		02		03		04		05		06		07	08	
Required Minimum Area (ft²)	<=	Designated Area (ft²)	OR	Required Minimum DC Power Rating (Watts)	<=	Designed DC Power Rating (Watts)	OR	Required Minimum Solar Savings Fraction	<=	Designed/Rated Solar Savings Fraction	OR	JA5 Compliant Thermostat Specified?	Alternative Energy Efficiency Measure	COMPLIES
(See Table F)				(See Tables G or J)				(See Table H)				(See Table I)		
	<=		OR	31,798	<=	74,880	OR		<=		OR			
	Location in construction documents showing the location for inverters and metering equipment and a pathway for the routing of conduit/ plumbing to the electrical service/ water heating system per §110.10(c).													
Battery storage system design meets the minimum requirements in Joint Appendix JA12 and the minimum energy (kWh)/ power (kW) capacity per Table J.														COMPLIES

D. EXCEPTIONAL CONDITIONS

This table is auto-filled with uneditable comments because of selections made or data entered in tables throughout the form.

E. ADDITIONAL REMARKS

This table is includes remarks made by the permit applicant to the Authority Having Jurisdiction.

CERTIFICATE OF COMPLIANCE			**NRCC-SAB-E**
Project Name: Perris Fire Station		**Report Page:**	**(Page 3 of 6)**
		Date Prepared:	4/13/2026

F. ALLOCATED SOLAR ZONE

This section does not apply to this project.

G. PERMANENTLY INSTALLED SOLAR PV FOR SOLAR READY EXCEPTION

This section does not apply to this project.

H. PERMANENTLY INSTALLED SOLAR HOT WATER SYSTEMS

This section does not apply to this project.

I. SMART THERMOSTATS AND ALTERNATIVE EFFICIENCY MEASURE FOR SOLAR READY EXCEPTION

This section does not apply to this project.

CERTIFICATE OF COMPLIANCE			**NRCC-SAB-E**
Project Name: Perris Fire Station		**Report Page:**	**(Page 4 of 6)**
		Date Prepared:	4/13/2026

J. PHOTOVOLTAIC (PV) AND BATTERY ENERGY STORAGE SYSTEMS

This table documents compliance with prescriptive photovoltaic and battery system requirements in §140.10/ §170.2(g and h). Unless the project meets one of the listed exceptions, or trades-off PV in an energy model using performance path, §140.10/ §170.2(g and h) requires installed photovoltaic and battery systems for newly constructed buildings. The installed PV systems must meet the minimum requirements in Joint Appendix 11.

Photovoltaic (PV) System

Equation 140.10-A/170.2-D Calculation Method

01	02	03	04
Building Type	Conditioned Floor Area (ft²)	Tenant Space Exception to §140.10(a)/§170.2(g) (Must check all to meet Exception)	Min Size of PV System Required (kWdc)
Office	4,964	☐ Tenant space is served by HVAC system that does not serve other tenant spaces in the building ☐ Tenant space has individual utility meter that does not include electric consumption of other tenant spaces in the building ☐ Commission has not approved community solar program applicable to this project ☐ Load serving entity does not provide program for virtual energy bill credits	15.54
Office	5,195	☐ Tenant space is served by HVAC system that does not serve other tenant spaces in the building ☐ Tenant space has individual utility meter that does not include electric consumption of other tenant spaces in the building ☐ Commission has not approved community solar program applicable to this project ☐ Load serving entity does not provide program for virtual energy bill credits	16.26

SARA Calculation Method

05	06	07	08	09	10	11	12
Roof Name	Roof Slope	Area of New Roof[1] (ft²)	Roof Area < 70% Solar Access[2] (ft²)	Plansheet or Document showing Solar Access Calculations	Roof area occupied, no structural support, not available due to other state codes, < 80 contiguous (ft²)	Solar Access Roof Area (SARA) (ft²)	Min Capacity of PV System Required (kWdc)
Fire station	>= 2:12	10,212	0	Roof Plan	0	10,212	15.54
Administration	>= 2:12	6,770	0	Roof Plan	0	6,770	16.26

CERTIFICATE OF COMPLIANCE			**NRCC-SAB-E**
Project Name: Perris Fire Station		**Report Page:**	**(Page 5 of 6)**
		Date Prepared:	4/13/2026

Total Min Size PV System Required for all Spaces (kWdc):	31.8
Total Size PV System in Design (kWdc):	74.88

[1]FOOTNOTES: Includes the area of the building's roof space capable of structurally supporting a PV system and the area of all roof space on covered parking areas, carports, and all other newly constructed structures on the site that are compatible with supporting a PV system per Title 24, Part 2 Section 1511.2.
[2]Solar access must be determined using CEC approved solar access calculation tools found at https://www.energy.ca.gov/programs-and-topics/programs/building-energy-efficiency-standards/solar-assessment-tools.
[3]As specified by CBC Section 503.1.4.

Battery Energy Storage System

01	02	03	04
Building Type	Rated Single Charge-Discharge AC Efficiency of BESS[1]	Min Rated Usable Energy Capacity of BESS Required (kWh)	Min Rated Power Capacity of BESS Required (kWdc)
Office	90	27.48	6.87
Office	90	28.76	7.19
Total Min Energy (kWh) and Power (kW) Capacity Required		56.25	14.06
Total Energy (kWh) and Power (kW) Capacity in Design		60	57

[1]FOOTNOTE: Rated single charge-discharge cycle AC to AC (round trip) efficiency of the battery storage system

K. DECLARATION OF REQUIRED CERTIFICATES OF INSTALLATION

Selections have been made based on information provided in this document. If any selections have been changed by the permit applicant, an explanation should be included Table E. Additional Remarks and ExceptionalConditionMessageCCSABE += UserChangedSelectionInCI. These documents must be provided to the building inspector during construction and can be found online

Form/Title
NRCI-SAB-01-E - Must be submitted for all buildings that must comply with solar readiness or PV/Battery requirements.

L. DECLARATION OF REQUIRED CERTIFICATES OF ACCEPTANCE

There are no forms required for this project.

CERTIFICATE OF COMPLIANCE			**NRCC-SAB-E**
Project Name: Perris Fire Station		**Report Page:**	**(Page 6 of 6)**
Project Address:	101 North D Street	**Date Prepared:**	4/13/2026

DOCUMENTATION AUTHOR'S DECLARATION STATEMENT

I certify that this Certificate of Compliance documentation is accurate and complete.

Documentation Author Name: Braden Kempton	Documentation Author Signature: Braden Kempton
Company: Design West Engineering	Signature Date: 2026-04-13
Address:	CEA/AEA/ECC Certification Identification (if applicable):
City/State/Zip:	Phone:

RESPONSIBLE PERSON'S DECLARATION STATEMENT

I certify the following under penalty of perjury, under the laws of the State of California:

1. The information provided on this Certificate of Compliance is true and correct.
2. I am eligible under Division 3 of the Business and Professions Code to accept responsibility for the building design or system design identified on this Certificate of Compliance (responsible designer)
3. The energy features and performance specifications, materials, components, and manufactured devices for the building design or system design identified on this Certificate of Compliance conform to the requirements of Title 24, Part 1 and Part 6 of the California Code of Regulations.
4. The building design features or system design features identified on this Certificate of Compliance are consistent with the information provided on other applicable compliance documents, worksheets, calculations, plans and specifications submitted to the enforcement agency for approval with this building permit application.
5. I will ensure that a completed signed copy of this Certificate of Compliance shall be made available with the building permit(s) issued for the building, and made available to the enforcement agency for all applicable inspections. I understand that a completed signed copy of this Certificate of Compliance is required to be included with the documentation the builder provides to the building owner at occupancy.

Responsible Person Name: Braden Kempton	Responsible Person Signature: Braden Kempton
Responsible Person Scope:	
Company: Design West Engineering	Date Signed: 2026-04-13
Address: 412 East Vanderbilt Way	License: 22839
City/State/Zip: San Bernardino CA 92408	Phone: 909-890-3700

R:_PROJECT\2025\25-114 perris fire station_CAD\25-114 E-T24.dwg
04/24/2026 12:45PM

STK ARCHITECTURE, INC.
42095 ZEVO DR., TEMECULA, CALIFORNIA 92590-3780
Phone: 951.296.9110 Fax: 951.296.6079 Email: stk@stkinc.com

CONSULTANT:

DESIGN WEST ENGINEERING
MECHANICAL • ELECTRICAL • ENERGY CONSULTANTS
412 E. Vanderbilt Way
San Bernardino, CA 92408
Phone: 909.890.3700
Fax: 909.890.3770
Email: cadd@designwesteng.com

REVIEWED FOR CODE COMPLIANCE

THESE PLANS AND DOCUMENTS HAVE BEEN REVIEWED AND FOUND TO BE IN COMPLIANCE WITH THE APPLICABLE CODE REQUIREMENTS OF THE JURISDICTION. ISSUANCE OF A PERMIT IS RECOMMENDED, SUBJECT TO APPROVAL BY OTHER DEPARTMENTS AND ANY NOTED CONDITIONS. THE STAMPING OF THESE PLANS SHALL NOT BE HELD TO PERMIT OR BE AN APPROVAL OF ANY VIOLATION OF APPLICABLE CODES AND STANDARDS, NOR RELIEVE THE OWNER, DESIGN PROFESSIONAL OF RECORD, OR CONTRACTOR OF COMPLIANCE WITH THE APPLICABLE CODES AND STANDARDS. PLAN REVIEW OF DOCUMENTS DOES NOT AUTHORIZE CONSTRUCTION TO PROCEED IN VIOLATION OF ANY FEDERAL, STATE, OR LOCAL REGULATION.

BUILDING BUREAU SOLUTIONS, INC.
REVIEWED BY: STEVE KIM, PE, CASp

THIS SET OF THE PLANS AND SPECIFICATIONS MUST BE KEPT ON THE JOB SITE AT ALL TIMES AND IT IS UNLAWFUL TO MAKE ANY CHANGES OR ALTERATIONS WITHOUT PERMISSION FROM THE CITY. OCCUPANCY OF STRUCTURE(S) IS NOT PERMITTED UNTIL FINAL APPROVAL IS GRANTED BY ALL APPLICABLE DEPARTMENTS.

BUILDING BUREAU SOLUTIONS INC.

REGISTERED PROFESSIONAL ENGINEER
BRADEN KEMPTON
22839
SIGNED:04/24/2026
ELECTRICAL
STATE OF CALIFORNIA

PROJECT ADMINISTERED BY:
CITY OF PERRIS

101 NORTH "D" STREET
PERRIS, CA 92570

PROJECT NAME:
SOUTH FIRE STATION AND ADMINISTRATIVE BUILDING

PROJECT CIP: F077

2495 MURRIETA ROAD
PERRIS, CA 92585

ISSUE INFORMATION:

DATE:	INFORMATION:
11-26-25	95% CD SUBMITTAL
02-05-26	△1 1st PC RESPONSE
02-19-26	△2 2nd PC RESPONSE

SHEET INFORMATION:

STK PROJECT NO.: 365-03-25
SCALE: AS NOTED
DATE: NOVEMBER 2025
PLOT DATE: –
DRAWN BY: JM / JM

SEAL:

SHEET TITLE:
TITLE 24 COMPLIANCE DOCUMENTS (PRESCRIPTIVE SOLAR AND BATTERY)

SHEET NO.:
E5.4

25-114



GENERAL NOTES:

1. PROVIDE OSHA DANGER SIGN. "NO SMOKING WITHIN 50 FEET" SEE SAMPLE ABOVE. SIGN TO BE 20"X24" PRESSURE SENSITIVE VINYL. CHAMPION AMERICA INC. (1-800-521-7000) PN 30612HF. MOUNT ON BOTH SIDES OF GENERATOR ENCLOSURE.

2. PROVIDE OSHA DANGER SIGN. "THIS EQUIPMENT STARTS AND STOPS AUTOMATICALLY" SEE SAMPLE ABOVE. SIGN TO BE 14"X10" CHAMPION AMERICA INC. (1-800-521-7000) SENSITIVE VINYL. PN 51368HF. OR APPROVED EQUIVALENT. MOUNT ON BOTH SIDES OF GENERATOR ENCLOSURE. SIGN IS TO BE INSTALLED SO IT IS VISIBLE TO PEDESTRIANS AT ALL TIMES.

GENERATOR SIGNAGE | 12

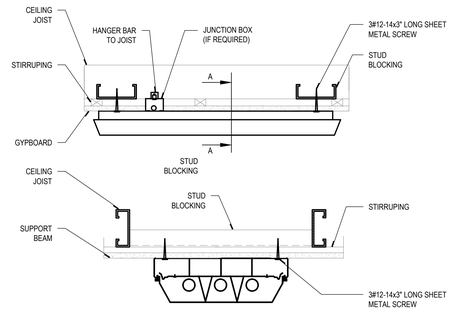

A-A SECTION

GENERAL NOTES:

1. FIXTURE SHALL BE 'UL' LISTED FOR LOW DENSITY CEILING MOUNTED.

SURFACE MOUNTED LTG FIXTURE | 8

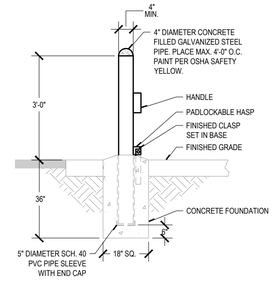

REMOVABLE BARRIER | 5

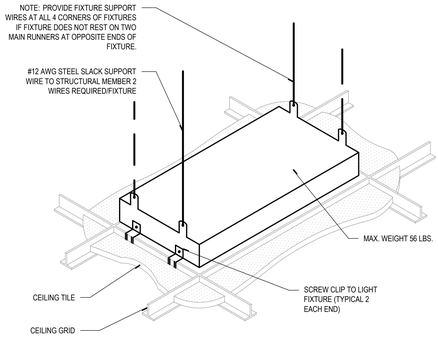

GENERAL NOTES:

1. REFER TO ARCHITECTURAL DRAWINGS FOR TYPE OF CEILING GRID AND TILE SYSTEM.

LIGHTING FIXTURE SUSPENSION | 1

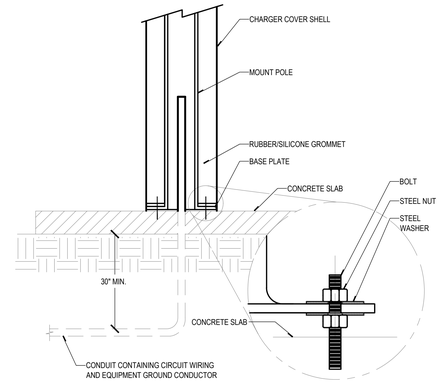

E.V. CHARGER MOUNTING | 13

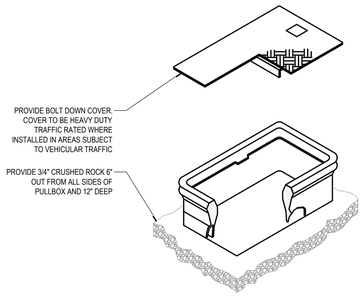

GENERAL NOTES:

1. PULLBOX TO BE SIZED PER NEC, U.O.N.
2. PROVIDE COVER LABELED WITH "POWER" OR "DATA" DESIGNATION.

PULLBOX INSTALLATION | 9

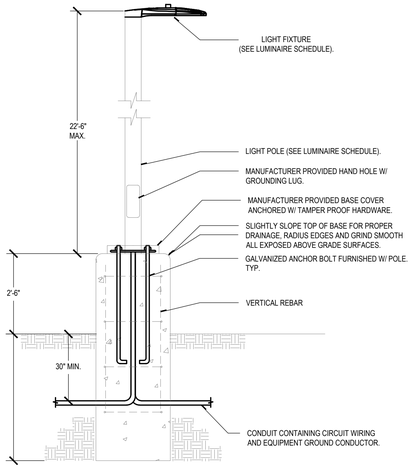

GENERAL NOTES:

1. GROUND POLE TO GROUND CONDUCTORS IN CONDUITS.
2. REFER TO LANDSCAPE ARCHITECTURAL FOR FINAL SITE FIXTURE LOCATIONS.
3. LOCATE ALL SITE POLETOP FIXTURES SO THAT THEY LINE UP WITH THE NEAREST PARKING STRIPE.
4. REFER TO STRUCTURAL DRAWINGS OR CALCULATIONS FOR FOOTING INFORMATION.

ABOVE GRADE POLETOP LIGHTING | 6

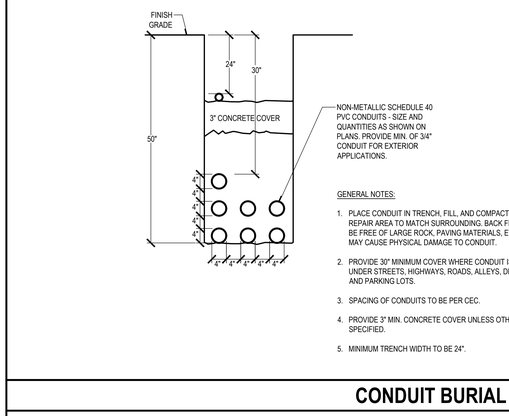

GENERAL NOTES:

1. PLACE CONDUIT IN TRENCH, FILL, AND COMPACT TO 90%. REPAIR AREA TO MATCH SURROUNDING. BACK FILL IS TO BE FREE OF LARGE ROCK, PAVING MATERIALS, ETC., THAT MAY CAUSE PHYSICAL DAMAGE TO CONDUIT.
2. PROVIDE 30" MINIMUM COVER WHERE CONDUIT IS PLACED UNDER STREETS, HIGHWAYS, ROADS, ALLEYS, DRIVEWAYS, AND PARKING LOTS.
3. SPACING OF CONDUITS TO BE PER CEC.
4. PROVIDE 3" MIN. CONCRETE COVER UNLESS OTHERWISE SPECIFIED.
5. MINIMUM TRENCH WIDTH TO BE 24".

CONDUIT BURIAL | 2

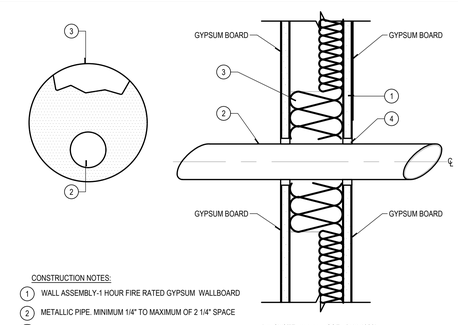

CONSTRUCTION NOTES:

1. WALL ASSEMBLY-1 HOUR FIRE RATED GYPSUM WALLBOARD
2. METALLIC PIPE. MINIMUM 1/4" TO MAXIMUM OF 2 1/4" SPACE
3. 2 1/2" MINIMUM FORMING MATERIAL OF THERMAFIBER SAFING INSULATION.
4. MINIMUM 1/2" DEPTH OF FIRECODE COMPOUND INSTALLED ON EACH SIDE OF THE WALL.

(UL SYSTEM WALL ASSEMBLY-1039)

RATED WALL PENETRATION | 14

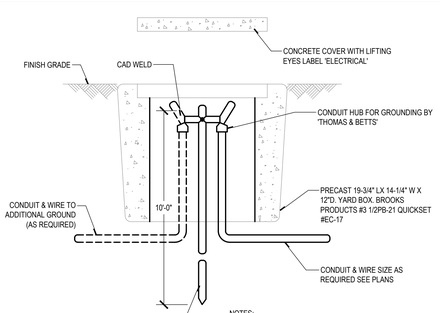

NOTES:

1. SIZE OF CONDUCTORS SHALL COMPLY W/CEC 250.66.
2. CHECK RESISTANCE TO GROUND. IF RESISTANCE EXCEEDS 25 OHMS, INSTALL ADDITIONAL GROUND RODS W/CONDUCTORS AS SHOWN. SEPARATE AT LEAST 6'-0" UNTIL RESISTANCE IS REDUCED TO 25 OHMS OR LESS (CEC 250.56).

GROUND ROD DETAIL | 10

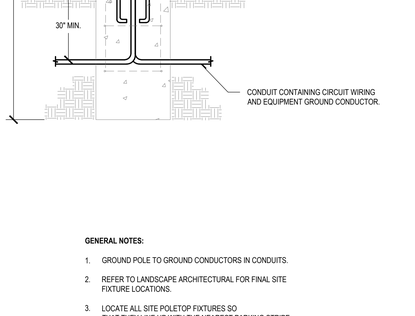

CONSTRUCTION NOTES:

1. DENOTES FIXTURE SUPPORT WIRE (MINIMUM #10) FROM LUMINARIE ATTACHED TO BUILDING STRUCTURE ABOVE.
2. DENOTES RECESSED FLUORESCENT OR LED DOWNLIGHT.
3. DENOTES CEILING BY OTHERS.

DOWN LIGHTING FIXTURE DETAIL | 7

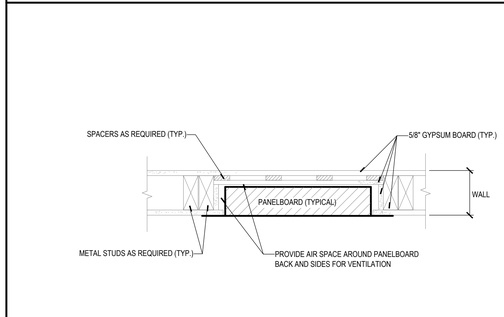

RECESSED ANNUNCIATOR PANEL | 3

NOTES:

1. SYSTEMS SHALL BE MANUFACTURED BY LISTEN TECHNOLOGIES, OR APPROVED EQUAL BY WILLIAMS SOUND OR PHONIC EAR. MFGR P/N OMITTED REFERENCE PROJECT ASSISTIVE LISTENING SYSTEM SPECIFICATIONS WHERE APPLICABLE.
2. CONTRACTOR SHALL PROVIDE ALL NECESSARY HARDWARE AND COMPONENTS FOR A COMPLETE AND OPERABLE SYSTEM FOR EACH LOCATION SHOWN ON ARCHITECTURAL PLANS AND WHERE REQUIRED.
3. ASSISTIVE LISTENING SYSTEMS SHALL BE PROVIDED IN ACCORDANCE WITH CBC SECTION 11B-219 AND SHALL COMPLY WITH CBC SECTION 11B-706.
4. THE MINIMUM NUMBER OF RECEIVERS TO BE PROVIDED SHALL BE EQUAL TO 4% OF THE TOTAL NUMBER OF SEATS (OR LISTED OCCUPANCY, WHICHEVER IS GREATER) BUT IN NO CASE BE LESS THAN TWO (2). 25% MINIMUM OF THE RECEIVERS PROVIDED, BUT NO LESS THAN TWO (2), SHALL BE HEARING-AID COMPATIBLE IN ACCORDANCE WITH CBC SECTION 11B-706.3.
5. IF THE SYSTEM PROVIDED IS LIMITED TO SPECIFIC AREAS OR SEATS, THEN SUCH AREAS OR SEATS SHALL BE WITHIN A 50-FOOT VIEWING DISTANCE OF, AND HAVE A COMPLETE VIEW OF, THE STAGE, PLAYING, OR PRESENTATION AREA. (CBC SECTION 11B-219.4).
6. CONTRACTOR TO PROVIDE ADDITIONAL REMOTE ANTENNA(S), AND ASSOCIATED ACCESSORIES/ HARDWARE AS REQUIRED FOR COMPLETE COVERAGE WITHIN ENTIRE INTENDED SYSTEM COVERAGE AREA.
7. CONTRACTOR TO PROVIDE TWO (2) RECHARGEABLE BATTERIES (MANUFACTURER RECOMMENDED) FOR EACH PORTABLE TRANSMITTER AND RECEIVER PROVIDED AS PART OF SYSTEM.
8. PROVIDE ALL ALS SIGNAGE IN THE QUANTITIES AND LOCATIONS AS INDICATED ON ARCHITECTURAL PLANS.
9. REFER TO SPECIFICATIONS 27 51 26 ASSISTED LISTENING SYSTEM FOR ADDITIONAL INFORMATION.

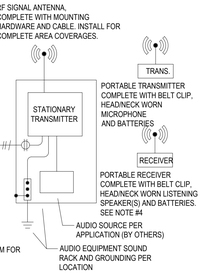

ASSISTIVE LISTENING DETAIL | 15

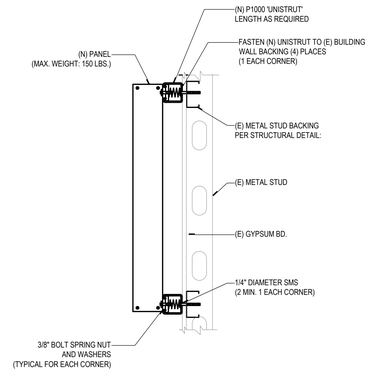

SURFACE PANELBOARD | 11

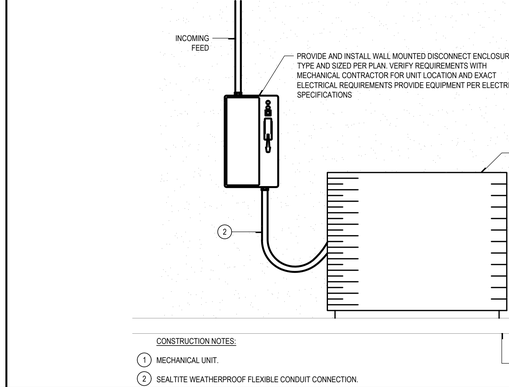

CONSTRUCTION NOTES:

1. MECHANICAL UNIT.
2. SEALTITE WEATHERPROOF FLEXIBLE CONDUIT CONNECTION.

MECHANICAL UNIT DISCONNECT | 4

STK ARCHITECTURE, INC.
42095 ZEVO DR., TEMECULA, CALIFORNIA 92590-3780
Phone: 951.296.9110 Fax: 951.296.6079 Email: stk@stkinc.com

CONSULTANT:

REVIEWED FOR CODE COMPLIANCE

THESE DESIGN DOCUMENTS SHALL BE REVIEWED AND FOUND TO BE IN COMPLIANCE WITH THE CALIFORNIA BUILDING CODES BEFORE THEY ARE CONSIDERED VALID FOR CONSTRUCTION. THE CONTRACTOR SHALL NOT USE THESE DOCUMENTS FOR CONSTRUCTION UNTIL THEY ARE REVIEWED AND APPROVED BY THE BUILDING DEPARTMENT. THE CONTRACTOR SHALL BE RESPONSIBLE FOR ALL CHANGES MADE TO THESE DOCUMENTS AFTER THEY HAVE BEEN REVIEWED AND APPROVED BY THE BUILDING DEPARTMENT.

DESIGN WEST ENGINEERING
MECHANICAL / ELECTRICAL / ENERGY CONSULTANTS
BUILDING ENERGY SOLUTIONS INC.

REGISTERED PROFESSIONAL ENGINEER
DENNIS K. KOBZA
22839
SIGNED 04/24/2026
ELECTRICAL
STATE OF CALIFORNIA

PROJECT ADMINISTERED BY:
CITY OF PERRIS

101 NORTH "D" STREET
PERRIS, CA 92570

PROJECT NAME:
SOUTH FIRE STATION AND ADMINISTRATIVE BUILDING

PROJECT CIP: F077

2495 MURRIETA ROAD
PERRIS, CA 92585

ISSUE INFORMATION:

DATE:	INFORMATION:
11-26-25	95% CD SUBMITTAL
02-05-26	1 1st PC RESPONSE
02-19-26	2 2nd PC RESPONSE

SHEET INFORMATION:

STK PROJECT NO.: 365-03-25
SCALE: AS NOTED
DATE: NOVEMBER 2025
PLOT DATE: –
DRAWN BY: JM / JM

SEAL:

SHEET TITLE:
ELECTRICAL DETAILS

SHEET NO.:
E6.1

4/24/2026 12:42PM R:_PROJECTS\2025\25-114 perris fire station_CAD\25-114 E-Details.dwg

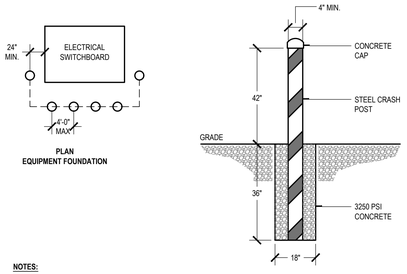

NOTES:

1. CRASH POST TO CONSIST OF 4" GALV. STEEL PIPE (1/4" MIN. WALL THK - SCHED 40) FILLED WITH CONCRETE.
2. PAINT YELLOW - HIGH REFLECTANCE.

-	7	CRASH BOLLARD	6

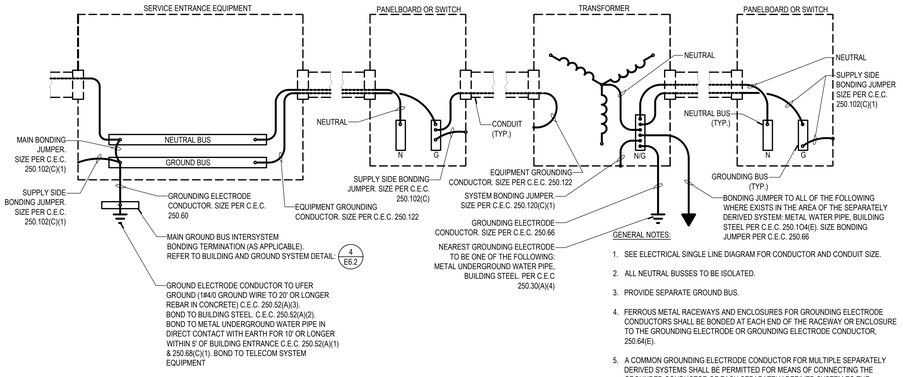

GENERAL NOTES:

1. SEE ELECTRICAL SINGLE LINE DIAGRAM FOR CONDUCTOR AND CONDUIT SIZE.
2. ALL NEUTRAL BUSSES TO BE ISOLATED.
3. PROVIDE SEPARATE GROUND BUS.
4. FERROUS METAL RACEWAYS AND ENCLOSURES FOR GROUNDING ELECTRODE CONDUCTORS SHALL BE BONDED AT EACH END OF THE RACEWAY OR ENCLOSURE TO THE GROUNDING ELECTRODE OR GROUNDING ELECTRODE CONDUCTOR, 250.64(E).
5. A COMMON GROUNDING ELECTRODE CONDUCTOR FOR MULTIPLE SEPARATELY DERIVED SYSTEMS SHALL BE PERMITTED FOR MEANS OF CONNECTING THE GROUNDED CONDUCTOR OF EACH SEPARATELY DERIVED SYSTEM TO THE GROUNDING ELECTRODE, C.E.C. 250.30(A)(6).

-	8	SERVICE & DISTRIBUTION GROUNDING	1

GENERAL NOTES:

1. ALL GROUNDING SHALL COMPLY WITH ARTICLE 250.
2. ALL GROUNDING CONDUCTORS AND BONDING JUMPERS SHALL BE CONNECTED BY EXOTHERMIC WELDING, LISTED PRESSURE CONNECTORS, LISTED CLAMPS, OR OTHER LISTED MEANS.
3. ALL CONDUCTORS SHALL BE COPPER.
4. ELECTRICALLY CONDUCTIVE MATERIALS, SUCH AS METAL WATER PIPING, METALLIC FIRE SPRINKLE PIPING, METAL GAS PIPING AND STRUCTURAL STEEL SHALL BE BONDED TO THE MAIN GROUND BUS.
5. ALL GROUNDING CONDUCTORS AND BONDING JUMPERS SHALL BE ROUTED TO ENSURE SHORTEST POSSIBLE CONDUCTOR LENGTH.
6. TRANSFORMERS WITHIN THE ELECTRICAL ROOM SHALL BE GROUNDED TO THE MAIN GROUND BUS.
7. THIS DETAIL IS ONLY DIAGRAMMATIC.

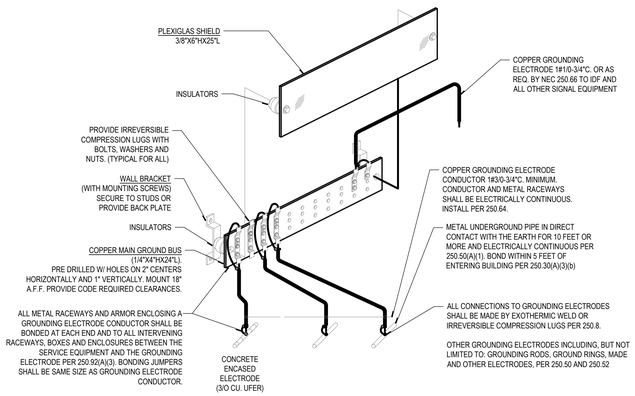

-	9	GROUND BUSBAR	4

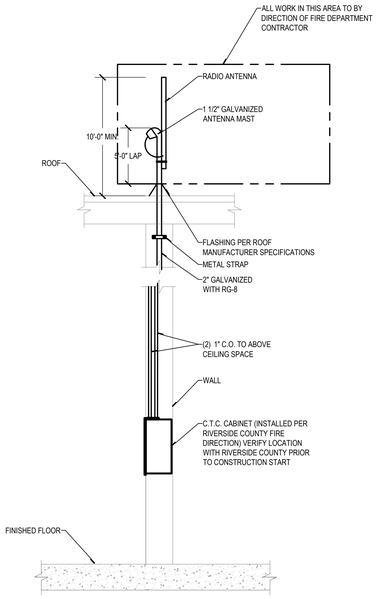

		RADIO ANTENNA DETAIL	2

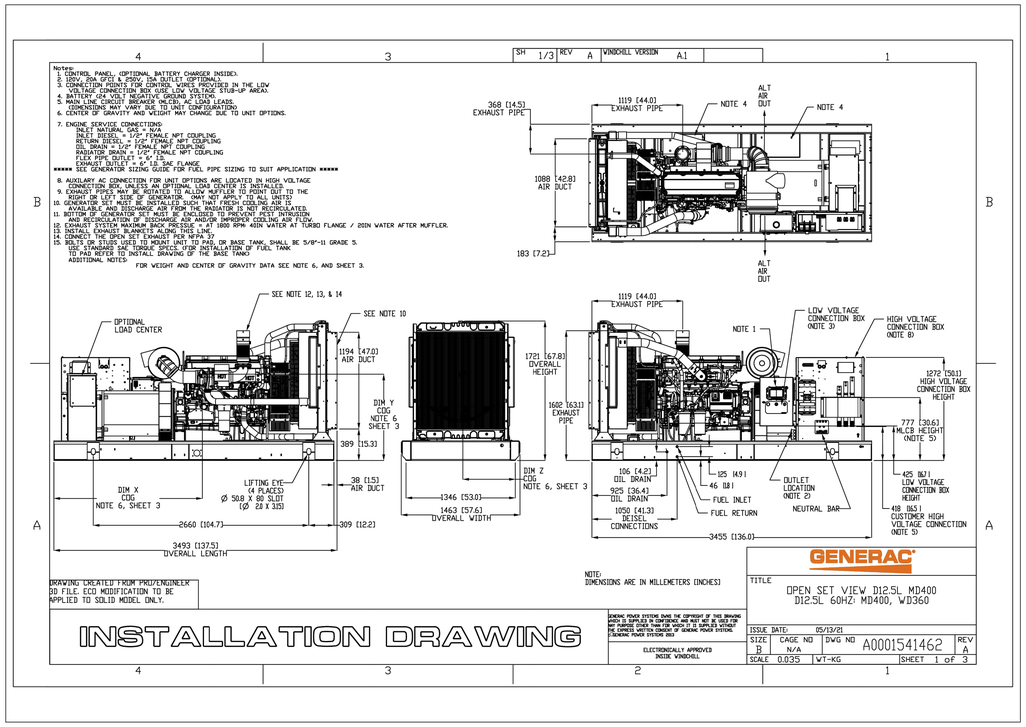

-	10	GENERATOR ELEVATIONS	5

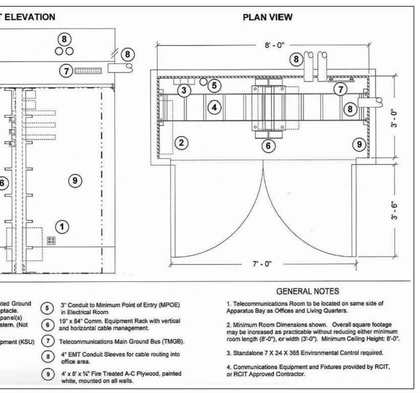

LEGEND

1. 120V, 20A, Dedicated Circuit, with Isolated Ground (Orange NEMA 5-20R) 1 per quad receptacle. 2 Circuits required. Power supplied by panel(s) supported by Emergency Generator System. (Not shown on PLAN/VIEW for clarity)
2. Location of Voice Communication Equipment (KSU)
3. Voice Cable Terminations
4. 12" Ladder Rack mounted 7'- 0" A.F.F.
5. 3" Conduit to Minimum Point of Entry (MPOE) in Electrical Room
6. 19" x 84" Comm. Equipment Rack with vertical and horizontal cable management.
7. Telecommunications Main Ground Bus (TMGB).
8. 4" EMT Conduit Sleeves for cable routing into office area.
9. 4' x 8' x ¾" Fire Treated A-C Plywood, painted white, mounted on all walls.

GENERAL NOTES

1. Telecommunications Room to be located on same side of Apparatus Bay as Offices and Living Quarters.
2. Minimum Room Dimensions shown. Overall square footage may be increased as practicable without reducing either minimum room length (8'-0"), or width (7'-0"). Minimum Ceiling Height: 8'-0".
3. Standalone 7 X 24 X 365 Environmental Control required.
4. Communications Equipment and Fixtures provided by RCIT, or RCIT Approved Contractor.

		TYPICAL COMM ROOM LAYOUT	3

STK ARCHITECTS, INC.
42095 ZEVO DR., TEMECULA, CALIFORNIA 92590-3780
Phone: 951.296.8110 Fax: 951.296.6079 Email: stk@stkinc.com

CONSULTANT:

REVIEWED FOR CODE COMPLIANCE

THESE DRAWINGS AND DOCUMENTS SHALL BE REVIEWED AND FOUND TO BE IN COMPLIANCE WITH THE CODES AND ORDINANCES APPLICABLE TO THE CITY OF PERRIS PRIOR TO THE ISSUANCE OF ANY PERMITS. THE CONTRACTOR SHALL BE RESPONSIBLE FOR CONSTRUCTING THE PROJECT IN ACCORDANCE WITH THE APPROVED PLANS AND ALL APPLICABLE CODES AND ORDINANCES. THE CONTRACTOR SHALL NOT DEVIATE FROM THE APPROVED PLANS WITHOUT THE PRIOR APPROVAL OF THE BUILDING OFFICIAL.

DESIGN WEST ENGINEERING
MECHANICAL • ELECTRICAL • ENERGY CONSULTANTS
FULLERTON • BEND • SOLUTIONS INC.

REGISTERED PROFESSIONAL ENGINEER
STEVEN K. KOZU
22839
SIGNED 04/24/2026
ELECTRICAL
STATE OF CALIFORNIA

PROJECT ADMINISTERED BY:
CITY OF PERRIS

101 NORTH "D" STREET
PERRIS, CA 92570

PROJECT NAME:
SOUTH FIRE STATION AND ADMINISTRATIVE BUILDING

PROJECT CIP: F077

2495 MURRIETA ROAD
PERRIS, CA 92585

ISSUE INFORMATION:

DATE:	INFORMATION:
11–26–25	95% CD SUBMITTAL
02–05–26	1st PC RESPONSE
02–19–26	2nd PC RESPONSE

SHEET INFORMATION:

STK PROJECT NO.: 365–03–25
SCALE: AS NOTED
DATE: NOVEMBER 2025
PLOT DATE: –
DRAWN BY: JM / JM

SEAL:

SHEET TITLE:
ELECTRICAL DETAILS (CONT.)

SHEET NO.:
E6.2

04/24/2026 12:28PM R:\PROJECTS\2025\25-114 perris fire station\CAD\25-114 E Details.dwg

25-114

CONFIDENTIAL

Page 6 of 11

Proposal Date: 11/14/2023

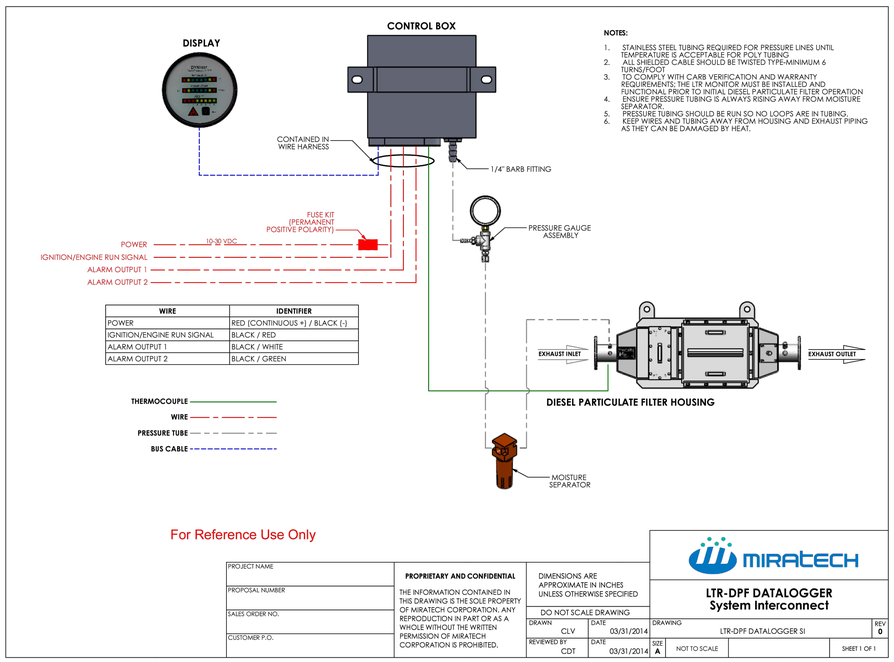

WIRE	IDENTIFIER
POWER	RED (CONTINUOUS +) / BLACK (-)
IGNITION/ENGINE RUN SIGNAL	BLACK / RED
ALARM OUTPUT 1	BLACK / WHITE
ALARM OUTPUT 2	BLACK / GREEN

NOTES:

1. STAINLESS STEEL TUBING REQUIRED FOR PRESSURE LINES UNTIL TEMPERATURE IS ACCEPTABLE FOR POLY TUBING
2. ALL SHIELDED CABLE SHOULD BE TWISTED TYPE-MINIMUM 6 TURNS/FOOT
3. TO COMPLY WITH CARB VERIFICATION AND WARRANTY REQUIREMENTS: THE LTR MONITOR MUST BE INSTALLED AND FUNCTIONAL PRIOR TO INITIAL DIESEL PARTICULATE FILTER OPERATION
4. ENSURE PRESSURE TUBING IS ALWAYS RISING AWAY FROM MOISTURE SEPARATOR.
5. PRESSURE TUBING SHOULD BE RUN SO NO LOOPS ARE IN TUBING.
6. KEEP WIRES AND TUBING AWAY FROM HOUSING AND EXHAUST PIPING AS THEY CAN BE DAMAGED BY HEAT.

For Reference Use Only

PROJECT NAME	**PROPRIETARY AND CONFIDENTIAL** THE INFORMATION CONTAINED IN THIS DRAWING IS THE SOLE PROPERTY OF MIRATECH CORPORATION. ANY REPRODUCTION IN PART OR AS A WHOLE WITHOUT THE WRITTEN PERMISSION OF MIRATECH CORPORATION IS PROHIBITED.	DIMENSIONS ARE APPROXIMATE IN INCHES UNLESS OTHERWISE SPECIFIED	MIRATECH
PROPOSAL NUMBER		DO NOT SCALE DRAWING	**LTR-DPF DATALOGGER System Interconnect**
SALES ORDER NO.		DRAWN CLV DATE 03/31/2014	DRAWING LTR-DPF DATALOGGER SI REV 0
CUSTOMER P.O.		REVIEWED BY CDT DATE 03/31/2014	SIZE A NOT TO SCALE SHEET 1 OF 1

DIESEL PARTICULATE FILTER - WIRING DIAGRAM | 3

6 | **4**

7 | **5**

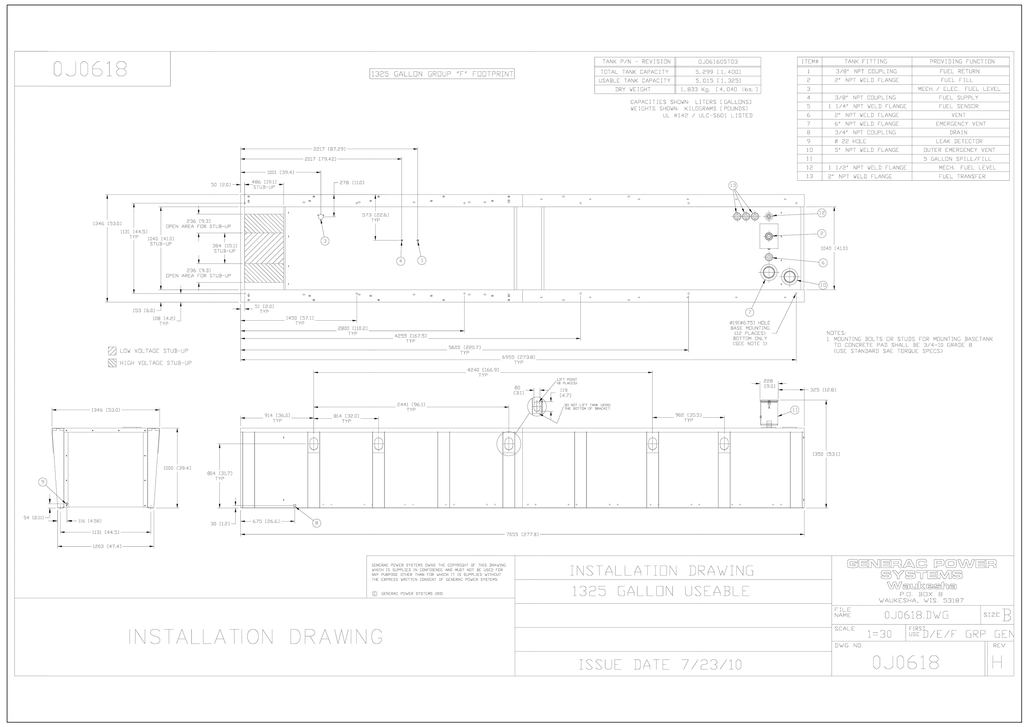

TANK P/N - REVISION	0J0616OSTD3
TOTAL TANK CAPACITY	5,099 (1,402)
USABLE TANK CAPACITY	5,015 (1,325)
DRY WEIGHT	1,833 Kg. (4,040 lbs.)

CAPACITIES SHOWN: LITERS (GALLONS)
WEIGHTS SHOWN: KILOGRAMS (POUNDS)
UL 8142 / ULC-S601 LISTED

ITEM#	TANK FITTING	PROVIDING FUNCTION
1	3/8" NPT COUPLING	FUEL RETURN
2	2" NPT WELD FLANGE	FUEL FILL
3		MECH / ELEC. FUEL LEVEL
4	3/8" NPT COUPLING	FUEL SUPPLY
5	1 1/4" NPT WELD FLANGE	FUEL SENSOR
6	2" NPT WELD FLANGE	VENT
7	4" NPT WELD FLANGE	EMERGENCY VENT
8	3/4" NPT COUPLING	DRAIN
9	# 32 HOLE	LEAK DETECTOR
10	5" NPT WELD FLANGE	OUTER EMERGENCY VENT
11		5 GALLON SPILL/FILL
12	1 1/2" NPT WELD FLANGE	MECH. FUEL LEVEL
13	2" NPT WELD FLANGE	FUEL TRANSFER

GENERAC POWER SYSTEMS OWNS THE COPYRIGHT OF THIS DRAWING. AMICH IS SUPPLIED IN CONFIDENCE AND MUST NOT BE USED FOR ANY PURPOSE OTHER THAN FOR WHICH IT IS SUPPLIED WITHOUT THE EXPRESS WRITTEN CONSENT OF GENERAC POWER SYSTEMS.
©GENERAC POWER SYSTEMS 2005

GENERATOR SUB-BASE FUEL TANK ELEVATIONS | 1

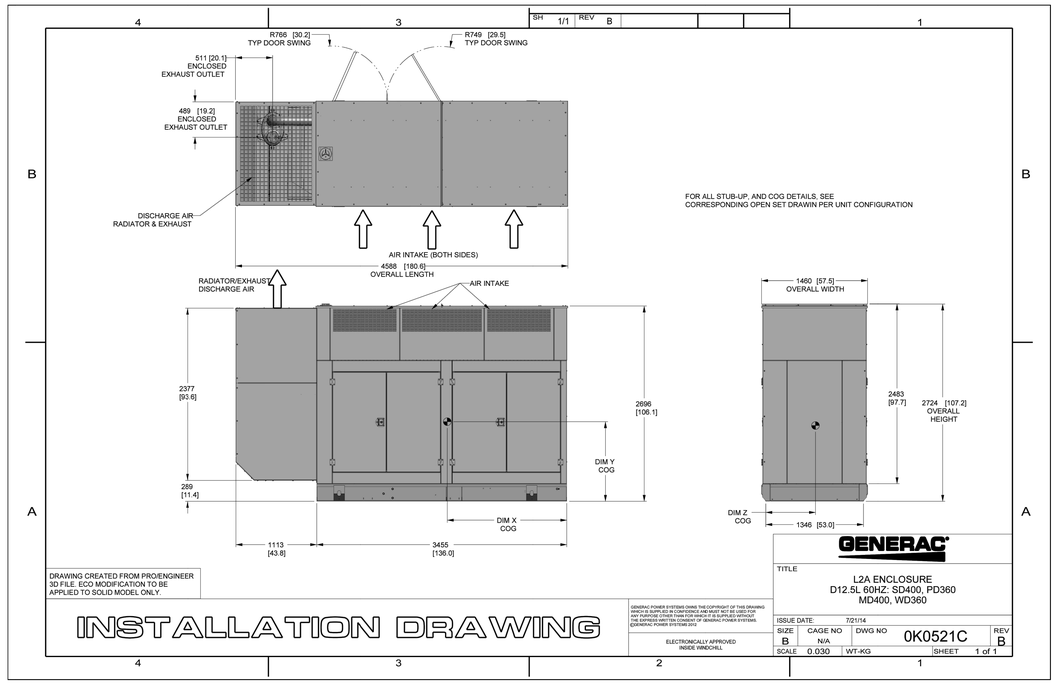

GENERATOR ENCLOSURE ELEVATIONS | 2

STK ARCHITECTS, INC.
42095 ZEVO DR., TEMECULA, CALIFORNIA 92590-3780
Phone: 951.296.9110 Fax: 951.296.6079 Email: stk@stkinc.com

CONSULTANT:

REVIEWED FOR CODE COMPLIANCE

THESE PLANS AND DOCUMENTS HAVE BEEN REVIEWED AND FOUND TO BE IN COMPLIANCE WITH THE 2022 CALIFORNIA BUILDING CODES. THIS REVIEW IS SUBJECT TO ALL CONDITIONS IMPOSED BY THE BUILDING OFFICIAL. THE ISSUANCE OF A PERMIT BASED ON THESE PLANS AND DOCUMENTS DOES NOT PREVENT THE BUILDING OFFICIAL FROM REQUIRING CORRECTIONS TO ERRORS AND OMISSIONS. THE CONTRACTOR OF RECORD IS RESPONSIBLE FOR CONSTRUCTION IN CONFORMANCE WITH ALL APPLICABLE CODES AND REGULATIONS. IT IS THE CONTRACTOR'S RESPONSIBILITY TO ENSURE THAT ALL CONSTRUCTION COMPLIES WITH THE REQUIREMENTS OF THE CODES AND REGULATIONS AS ADOPTED BY THE JURISDICTION.
BUILDING DEPARTMENT: CITY OF PERRIS
REVIEWED BY: DESIGN WEST ENGINEERING
DATE: 02/19/2026

DESIGN WEST ENGINEERING
MECHANICAL / ELECTRICAL / ENERGY CONSULTANTS
FIRE PROTECTION ENGINEERING
BUILDING ENERGY
SOLUTIONS INC.

REGISTERED PROFESSIONAL ENGINEER
JASON KOZA
22839
SIGNED 04/24/2026
ELECTRICAL
STATE OF CALIFORNIA

PROJECT ADMINISTERED BY:
CITY OF PERRIS

101 NORTH "D" STREET
PERRIS, CA 92570

PROJECT NAME:
SOUTH FIRE STATION AND ADMINISTRATIVE BUILDING

PROJECT CIP: F077

2495 MURRIETA ROAD
PERRIS, CA 92585

ISSUE INFORMATION:

DATE:	INFORMATION:
11-26-25	95% CD SUBMITTAL
02-05-26	1st PC RESPONSE
02-19-26	2nd PC RESPONSE

SHEET INFORMATION:

STK PROJECT NO.: 365-03-25
SCALE: AS NOTED
DATE: NOVEMBER 2025
PLOT DATE: –
DRAWN BY: JM / JM

SEAL:

SHEET TITLE:
ELECTRICAL DETAILS (CONT.)

SHEET NO.:
E6.3

IN: \PROJECTS\2025\25-114 perris fire station_CAD\25-114 E-Details.dwg
10/23/2025 12:48PM

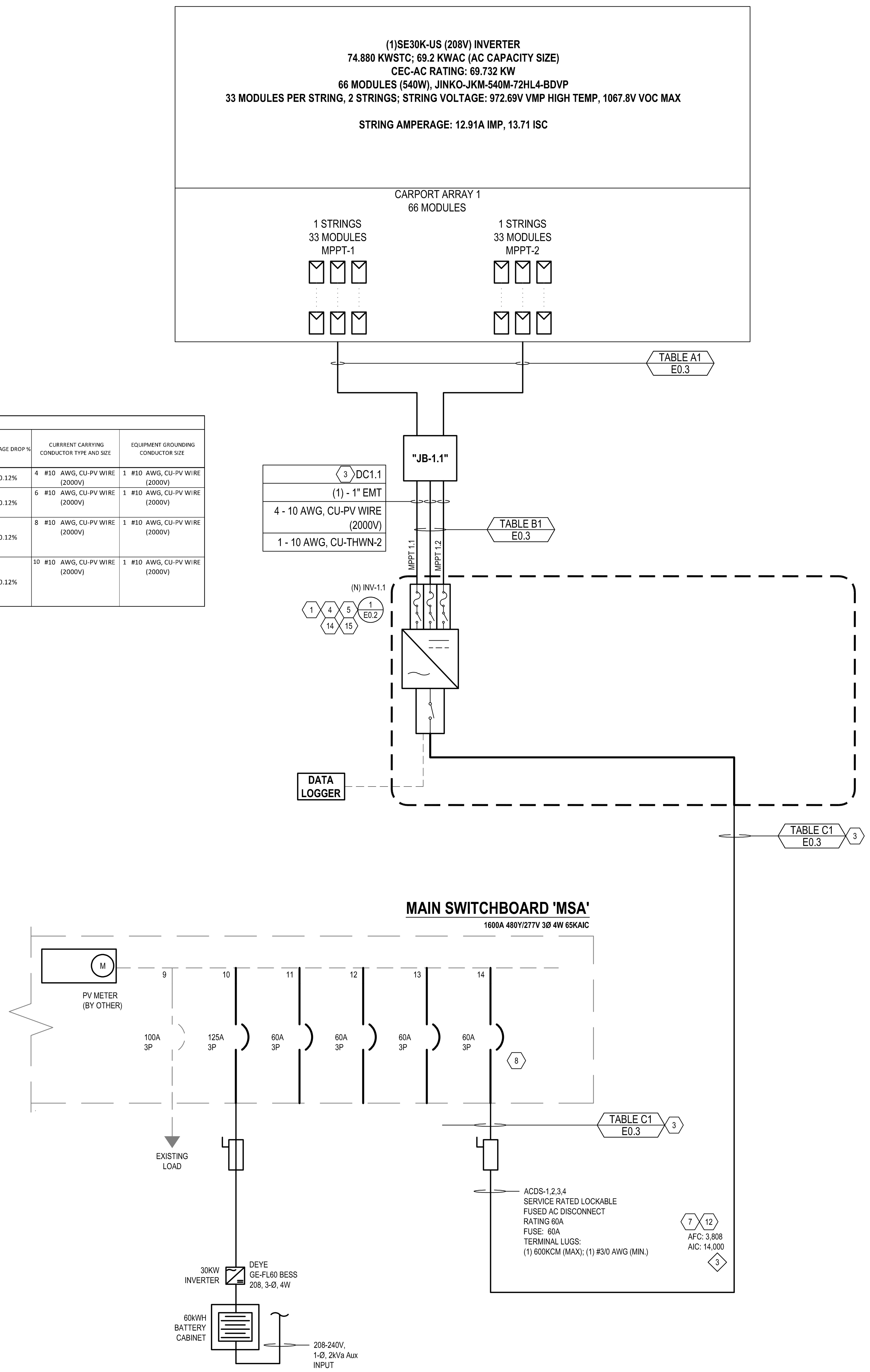

TABLE B1 - DC CONDUCTOR AND CONDUIT CALCULATIONS

	INITIAL CONDUCTOR LOCATION	FINAL CONDUCTOR LOCATION	RACEWAY NAME	CIRCUIT ID	RACEWAY SIZE	# OF CONDUCTORS IN RACEWAY	CONDUIT FILL %	310.15(B)(2)(a) AMBIENT TEMP CORRECTION FACTOR	310.15(B)(3)(a) FILL ADJUSTEMENT FACTOR	690.8(A)(1), 690.8(B)(1) ADJUSTMENT	ISC	DESIGN LINE CURRENT	TERMINAL TEMPERATURE LIMIT	OCPD	MINIMUM CIRCUIT CORRECTED AMPACITY	90° CONDUCTOR CORRECTED AMPACITY	75° CONDUCTOR RATED AMPACITY	60° CONDUCTOR RATED AMPACITY	LENGTH	VOLTAGE DROP %	CURRENT CARRYING CONDUCTOR TYPE AND SIZE	EQUIPMENT GROUNDING CONDUCTOR SIZE
2-STRINGS	JB-1.1	INV-1.1	DC1.1	DC1.1-1	1"	5	11%	0.87	0.8	1.56	11.12	17.35	CU-90°	N/A	13.90	27.84	35.00	30.00	40	0.12%	4 #10 AWG, CU-PV WIRE (2000V)	1 #10 AWG, CU-PV WIRE (2000V)
				DC1.1-2							11.12	17.35		N/A	13.90	27.84	35.00	30.00				
2-STRINGS	JB-1.2	INV-1.2	DC1.2	DC2.1-1	1"	7	15%	0.87	0.8	1.56	11.12	17.35	CU-90°	N/A	13.90	27.84	35.00	30.00	40	0.12%	6 #10 AWG, CU-PV WIRE (2000V)	1 #10 AWG, CU-PV WIRE (2000V)
				DC2.1-2							11.12	17.35		N/A	13.90	27.84	35.00	30.00				
				DC2.1-3							11.12	17.35		N/A	13.90	27.84	35.00	30.00				
2-STRINGS	JB-1.3	INV-1.3	DC1.3	DC3.1-1	1"	9	19%	0.87	0.7	1.56	11.12	17.35	CU-90°	N/A	13.90	24.36	35.00	30.00	40	0.12%	8 #10 AWG, CU-PV WIRE (2000V)	1 #10 AWG, CU-PV WIRE (2000V)
				DC3.1-2							11.12	17.35		N/A	13.90	24.36	35.00	30.00				
				DC3.1-3							11.12	17.35		N/A	13.90	24.36	35.00	30.00				
				DC3.1-4							11.12	17.35		N/A	13.90	24.36	35.00	30.00				
2-STRINGS	JB-1.4	INV-1.4	DC1.4	DC4.1-1	1"	11	24%	0.87	0.5	1.56	11.12	17.35	CU-90°	N/A	13.90	17.40	35.00	30.00	40	0.12%	10 #10 AWG, CU-PV WIRE (2000V)	1 #10 AWG, CU-PV WIRE (2000V)
				DC4.1-2							11.12	17.35		N/A	13.90	17.40	35.00	30.00				
				DC4.1-3							11.12	17.35		N/A	13.90	17.40	35.00	30.00				
				DC4.1-4							11.12	17.35		N/A	13.90	17.40	35.00	30.00				
				DC4.1-5							11.12	17.35		N/A	13.90	17.40	35.00	30.00				

VOLTAGE DROP	INV-1.1	INV-1.2	INV-2.1	INV-2.2	INV-3.1	INV-3.2	AGGREGATE VOLTAGE DROP
TOTAL DC VOLTAGE DROP:	0.29%	0.29%	0.29%	0.29%	0.29%	0.29%	0.29%
TOTAL AC VOLTAGE DROP:	0.91%	1.13%	1.03%	1.54%	1.18%	1.23%	1.17%
TOTAL VOLTAGE DROP:	1.20%	1.43%	1.33%	1.83%	1.47%	1.52%	1.46%

* REFER TO TABLES A1, B1, & C1 FOR VOLTAGE DROP BREAKDOWNS

TABLE D1 - CONDUCTOR VALUES

DC CONDUITS	DC VOLTAGE DROP	DESIGN LINE CURRENT	MINIMUM CORRECTED AMPACTIY	CONDUIT FILL	CONDUCTOR CORRECTED AMPACITY
RACEWAY NAME	(2*TOTAL LENGTH*RESISTANCE PER 1000FT*PHASE CURRENT /1000FT/STRING VOLTAGE#/ WIRES PER PHASE)= VOLTAGE DROP IN CONDUIT	ISC*1.56	ISC*1.25	100*(TOTAL CONDUCTOR AREA)/((CONDUIT AREA)*(PERCENT ALLOWED FILL)) = PERCENT MAXIMUM FILL	CONDUCTOR AMPACITY AT 30C * CONDUCTOR PER PHASE * TEMP. CORRECTION FACTOR * FILL ADJUSTEMENT FACTOR = CONDUCTOR CORRECTED AMPACITY
DC1.2	2 * 40 * 1.24 * 10.69 / 1000 / 652.32 / 1 = 0.12%	10.69 * 1.56 = 17.35	10.69 * 1.25 = 13.90	100 * 0.12 / (0.86 * 0.4) = 37%	(40 * 1 * 0.87 * 0.8) = 27.84
AC CONDUITS	3 PHASE AC VOLTAGE DROP	DESIGN LINE CURRENT	MINIMUM CORRECTED AMPACTIY	CONDUIT FILL	CONDUCTOR CORRECTED AMPACITY
RACEWAY NAME	1.732*TOTAL LENGTH*RESISTANCE PER 1000 FT*PHASE CURRENT/1000 FT/OPERATING VOLTAGE/ # WIRE PER PHASE) = VOLTAGE DROP IN CONDUIT	OPERATING CURRENT * 1.25	OPERATING CURRENT * 1.25	100*(TOTAL CONDUCTOR AREA)/((CONDUIT AREA)*(PERCENT ALLOWED FILL)) = PERCENT MAXIMUM FILL	CONDUCTOR AMPACITY AT 30C * CONDUCTOR PER PHASE * TEMP. CORRECTION FACTOR * FILL ADJUSTEMENT FACTOR = CONDUCTOR CORRECTED AMPACITY
AC1.1	1.732 * 110 * 0.245 * 75.25 / 1000 / 480 / 1 = 0.75%	60.20 * 1.25 = 75.25	60.20 * 1.25 = 75.25	100 * 0.33 / (0.86 * 0.4) = 98%	(115 * 1 * 87 * 1) = 100.05

TABLE C1 - AC CONDUCTOR AND CONDUIT CALCULATIONS

INITIAL CONDUCTOR LOCATION	FINAL CONDUCTOR LOCATION	RACEWAY NAME	CIRCUIT ID	RACEWAY SIZE	# OF PARALELL CIRCUITS	# OF CONDUCTORS PER RACEWAY	CONDUIT FILL %	310.15(B)(2)(a) AMBIENT TEMP CORRECTION FACTOR	310.15(B)(3)(a) FILL ADJUSTEMENT FACTOR	690.8(A)(3) CONDUCTOR ADJUSTMENT FACTOR	OPERATING LINE CURRENT	DESIGN LINE CURRENT	TERMINAL TEMPERATURE LIMIT	OCPD	MINIMUM CIRCUIT CORRECTED AMPACITY	90° CONDUCTOR CORRECTED AMPACITY	75° CONDUCTOR RATED AMPACITY	60° CONDUCTOR RATED AMPACITY	LENGTH	VOLTAGE DROP %	CURRRENT CARRYING CONDUCTOR TYPE AND SIZE	EQUIPMENT GROUNDING CONDUCTOR SIZE
INV-1.1	DPVA-1	AC1.1	AC1.1-1	1"	1	4	39%	0.87	100%	1.25	60.20	75.25	CU-75°	80	75.25	100.05	100.00	85.00	110	0.75%	3 #3 AWG. CU-THWN-2	1 #8 AWG. CU-THWN-2
INV-1.2	DPVA-1	AC1.2	AC1.2-1	1"	1	4	34%	0.87	100%	1.25	43.50	54.38	CU-75°	60	54.38	82.65	85.00	70.00	160	0.97%	3 #4 AWG. CU-THWN-2	1 #8 AWG, CU-THWN-2
INV-2.1	DPVA-2	AC1.3	AC1.3-1	1-1/4"	1	4	34%	0.87	100%	1.25	72.20	90.25	CU-75°	100	90.25	126.15	130.00	110.00	50	0.24%	3 #1 AWG. CU-THWN-2	1 #8 AWG, CU-THWN-2
INV-2.2	DPVA-2	AC1.4	AC1.4-1	1"	1	4	39%	0.87	100%	1.25	60.20	75.25	CU-75°	80	75.25	100.05	100.00	85.00	110	0.75%	3 #3 AWG. CU-THWN-2	1 #8 AWG. CU-THWN-2
INV-3.1	DPVA-2	AC1.5	AC1.5-1	1-1/4"	1	4	26%	0.87	100%	1.25	60.20	75.25	CU-75°	80	75.25	113.10	115.00	95.00	75	0.39%	3 #2 AWG. CU-THWN-2	1 #8 AWG, CU-THWN-2
INV-3.2	DPVA-2	AC1.6	AC1.6-1	1-1/4"	1	4	34%	0.87	100%	1.25	43.50	54.38	CU-75°	60	54.38	126.15	130.00	110.00	150	0.44%	3 #1 AWG. CU-THWN-2	1 #8 AWG, CU-THWN-2
DPVA-2	PIC-2	AC1.7	AC1.7-1	3-1/2"	1	5	37%	0.87	80%	1.25	236.10	295.13	CU-75°	300	295.13	330.60	420.00	350.00	10	0.02%	4 #600 KCM. CU-THWN-2	1 #1/0 KCM. CU-THWN-2
PIC-2	PIC-1	AC1.8	AC1.8-1	3-1/2"	3	5	37%	0.87	80%	1.25	236.10	295.13	CU-75°	300	295.13	991.80	1260.00	1050.00	710	0.58%	4 #600 KCM. CU-THWN-2	1 #1/0 KCM. CU-THWN-2
PIC-1	DPVA-1	AC1.9	AC1.9-1	3-1/2"	1	5	37%	0.87	80%	1.25	236.10	295.13	CU-75°	300	295.13	330.60	420.00	350.00	10	0.02%	4 #600 KCM. CU-THWN-2	1 #1/0 KCM. CU-THWN-2
DPVA-1	ACDS-A	AC1.10	AC1.10-1	3"	2	5	31%	0.87	80%	1.25	339.80	424.75	CU-75°	450	424.75	487.20	620.00	520.00	40	0.12%	4 #350 KCM. CU-THWN-2	1 #1/0 KCM. CU-THWN-2
ACDS-A	MAIN 'MSA'	AC1.11	AC1.11-1	3"	2	5	31%	0.87	80%	1.25	339.80	424.75	CU-75°	450	424.75	487.20	620.00	520.00	15	0.04%	4 #350 KCM. CU-THWN-2	1 #1/0 KCM. CU-THWN-2

PV SINGLE LINE DIAGRAM

SCALE: 1/4"=1'-0" (1)

KEY NOTE (#)

1. REFER TO 'GENERAL NOTES' ON ELECTRICAL LEGENDS AND NOTES SHEET FOR WIRING METHODS, MATERIALS, AND REQUIREMENTS.
2. PROVIDE ARC FLASH WARNING SIGNAGE AS PER NEC 110.16.
3. PROVIDE SIGNS AT THE MAIN PV DISCONNECT SWITCH, INVERTERS, AND DISCONNECTS AS PER NEC 690.14, 690.17, 690.54, AND 705.10.
4. ALL CONDUITS WITH DC CONDUCTORS ARE TO HAVE A #12 GROUNDING CONDUCTOR IN CONDUIT, U.O.N.
5. ALL UTILITY SERVICES SHALL BE INSTALLED PER THE UTILITY COMPANY REQUIREMENTS.
6. INSTALLER SHALL BE RESPONSIBLE FOR VERIFYING THAT AL BACKFED BREAKERS ARE SUITABLE FOR THE APPLICATION AND THAT IF GFP IS PRESENT, ALL SOLAR FEEDERS SHALL HAVE GFP PER 705.32.
7. FOR SIGNAGE TAG "(X)" REFER TO SHEET E0.5.
8. INCREASES IN EQUIPMENT GROUNDING CONDUCTOR SIZE TO ADDRESS VOLTAGE DROP SHALL NOT BE REQUIRED, NEC 690.45.

PSE NOTES:

(1) NET METER, PSE 15kV, 200 AMP CLASS PRIMARY METERING CABINET (PMC), MUST HAVE PHENOLIC LABEL STATING LOCATION OF AC DISCONNECT SWITCH.

(2) CUSTOMER OWNED 12.47kV/7,200V - 480GY/277V TRANSFORMER.

(3) AC DISCONNECT MUST HAVE PHENOLIC LABEL FOR CO#, AND PHENOLIC LABEL STATING LOCATION OF PSE NET METER.

DETAIL

SCALE: 1/4"=1'-0" (2)

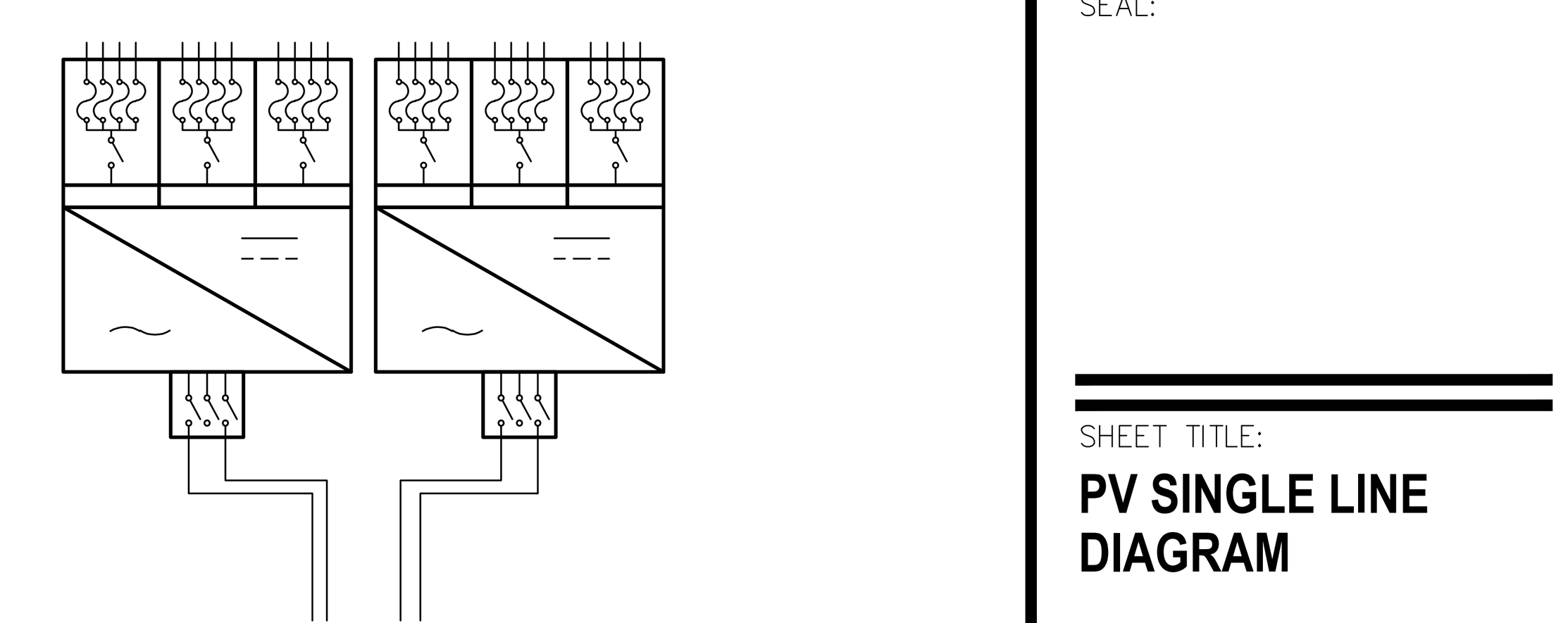

SOALREDGE SE30 KUS
208 3Ø 4W INVERTER (1 X UNITS)
DC LUGS - MAX. - #6 AWG
MIN. - #12 AWG
AC LUGS - MAX. - #4/0 AWG
MIN. - #1/0 AWG
MAX OUTPUT CURRENT - 48.25A
COMMUNICATION INTERFACE: RS485 INTERFACE VIA SOLAREDGE DATA LOGGER SE1000-DTLG-S1

SOLAREDGE INVERTER 30KW

(3)

STK ARCHITECTURE, INC.
42095 ZEVO DR., TEMECULA, CALIFORNIA 92590-3780
Phone: 951.296.9110 Fax: 951.296.6079 Email: stk@stkinc.com

CONSULTANT:
DESIGN WEST ENGINEERING
MECHANICAL • ELECTRICAL • ENERGY CONSULTANTS
Email: cadd@designwesteng.com

REVIEWED FOR CODE COMPLIANCE
BUILDING BUREAU SOLUTIONS INC.
REVIEWED BY: STEVE KIM, PE, CASp

REGISTERED PROFESSIONAL ENGINEER BRADEN KEMP 22839 SIGNED:04/24/2026 ELECTRICAL STATE OF CALIFORNIA

PROJECT ADMINISTERED BY:
CITY OF PERRIS
101 NORTH "D" STREET
PERRIS, CA 92570

PROJECT NAME:
SOUTH FIRE STATION AND ADMINISTRATIVE BUILDING

PROJECT CIP: F077

2495 MURRIETA ROAD
PERRIS, CA 92585

ISSUE INFORMATION:

DATE:	INFORMATION:
11-26-25	95% CD SUBMITTAL
02-05-26	1 1st PC RESPONSE
02-19-26	2 2nd PC RESPONSE

SHEET INFORMATION:
STK PROJECT NO.: 365-03-25
SCALE: AS NOTED
DATE: NOVEMBER 2025
PLOT DATE: –
DRAWN BY: JM / JM

SEAL:

SHEET TITLE:
PV SINGLE LINE DIAGRAM

SHEET NO.:
E7.1

25-114

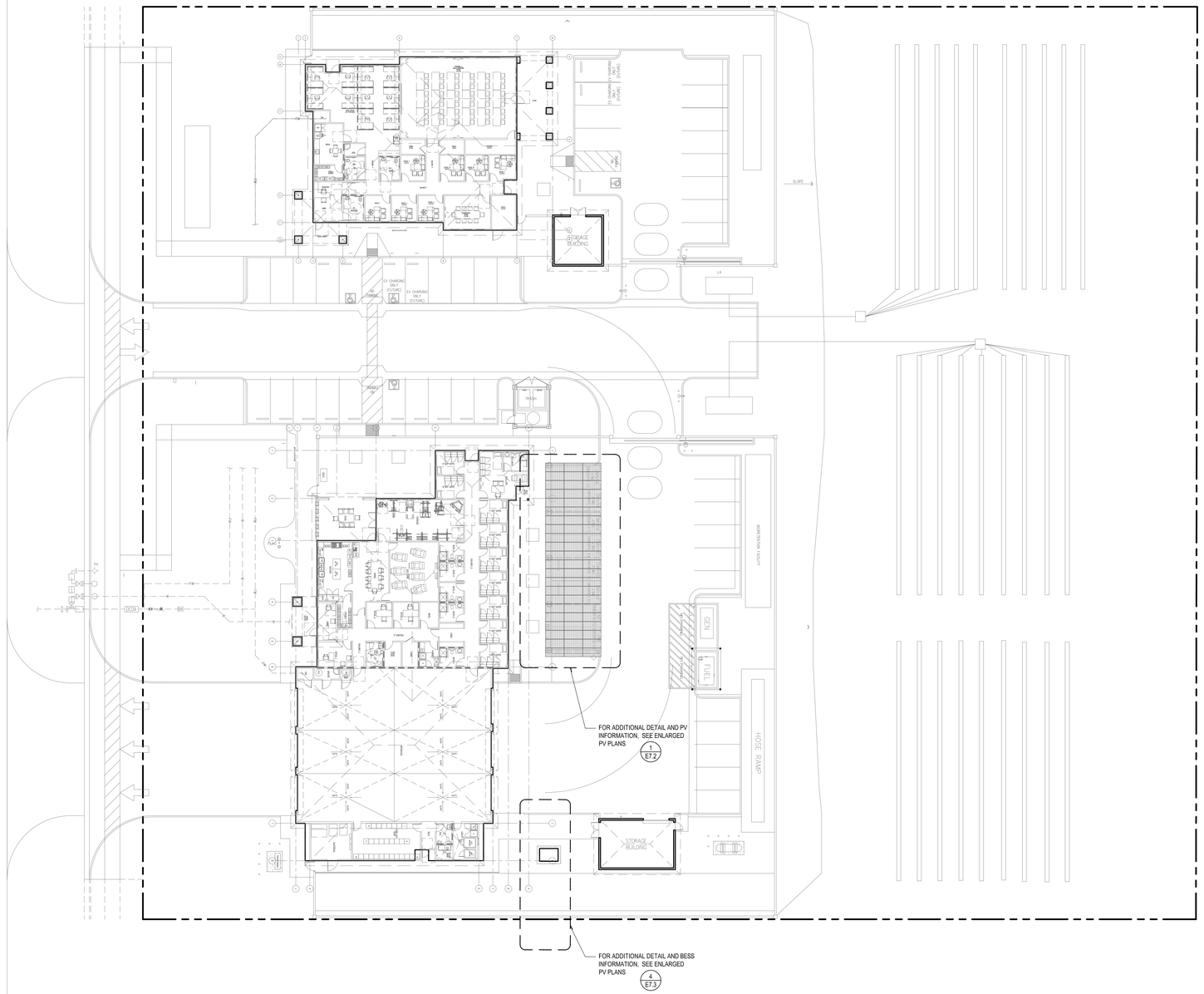

PV SITE PLAN

SCALE: 1/4"=1'-0" (1)

KEY NOTE (#)

1. FIRE EXTINGUISHER & CABINET – TYP. OF 2.

DETAIL

SCALE: 1/4"=1'-0" (2)

DETAIL

SCALE: 1/4"=1'-0" (3)

STK ARCHITECTS, INC.
42095 ZEVO DR. TEMECULA, CALIFORNIA 92590-3780
Phone: 951.296.9110 Fax: 951.296.6079 Email: stk@stkinc.com

CONSULTANT:

REVIEWED FOR CODE COMPLIANCE

THESE DESIGN DOCUMENTS HAVE BEEN REVIEWED AND FOUND TO BE IN SUBSTANTIAL COMPLIANCE WITH THE APPLICABLE CODES. THIS APPROVAL IS SUBJECT TO ALL PROVISIONS WITHIN THE CODES AND DOES NOT AUTHORIZE THE VIOLATION OF ANY CODE OR ORDINANCE. THE BUILDING OFFICIAL RESERVES THE RIGHT TO REQUIRE CORRECTIONS, ADDITIONAL WORK OR ADDITIONAL INFORMATION AS NECESSARY TO ENSURE COMPLIANCE WITH ALL APPLICABLE CODES. CONSTRUCTION SHALL NOT DEVIATE FROM THE APPROVED PLANS WITHOUT THE PRIOR APPROVAL OF THE BUILDING OFFICIAL. THE CONTRACTOR OF RECORD IS RESPONSIBLE FOR CONSTRUCTION IN ACCORDANCE WITH THE APPROVED PLANS AND ALL APPLICABLE CODES. THE APPROVAL OF THESE PLANS DOES NOT RELIEVE THE CONTRACTOR OF RESPONSIBILITY FOR CORRECTING ERRORS, OMISSIONS, OR CONFLICTS DISCOVERED DURING CONSTRUCTION. APPROVED PLANS MUST BE KEPT ON THE JOB SITE AT ALL TIMES DURING CONSTRUCTION.

BUILDING DEPARTMENT

DESIGN WEST ENGINEERING
MECHANICAL/ELECTRICAL/ENERGY CONSULTANTS
DEPARTMENT

BUILDING ENERGY SOLUTIONS INC.

REGISTERED PROFESSIONAL ENGINEER
PATRICK KOCH
22839
SIGNED 04/24/2026
ELECTRICAL
STATE OF CALIFORNIA

PROJECT ADMINISTERED BY:

CITY OF PERRIS

101 NORTH "D" STREET
PERRIS, CA 92570

PROJECT NAME:

SOUTH FIRE STATION AND ADMINISTRATIVE BUILDING

PROJECT CIP: F077

2495 MURRIETA ROAD
PERRIS, CA 92585

ISSUE INFORMATION:

DATE:	INFORMATION:
11-26-25	95% CD SUBMITTAL
02-05-26	1 1st PC RESPONSE
02-19-26	2 2nd PC RESPONSE

SHEET INFORMATION:

STK PROJECT NO.: 365-03-25
SCALE: AS NOTED
DATE: NOVEMBER 2025
PLOT DATE: --
DRAWN BY: JM / JM

SEAL:

SHEET TITLE:

PV SITE PLAN

SHEET NO.:

E7.2

02/05/2026 11:08AM R:_PROJECTS\2025\25-114 Perris Fire Station_CAD\2-Plot\Sheets\ PV CANOPY PLANS.dwg

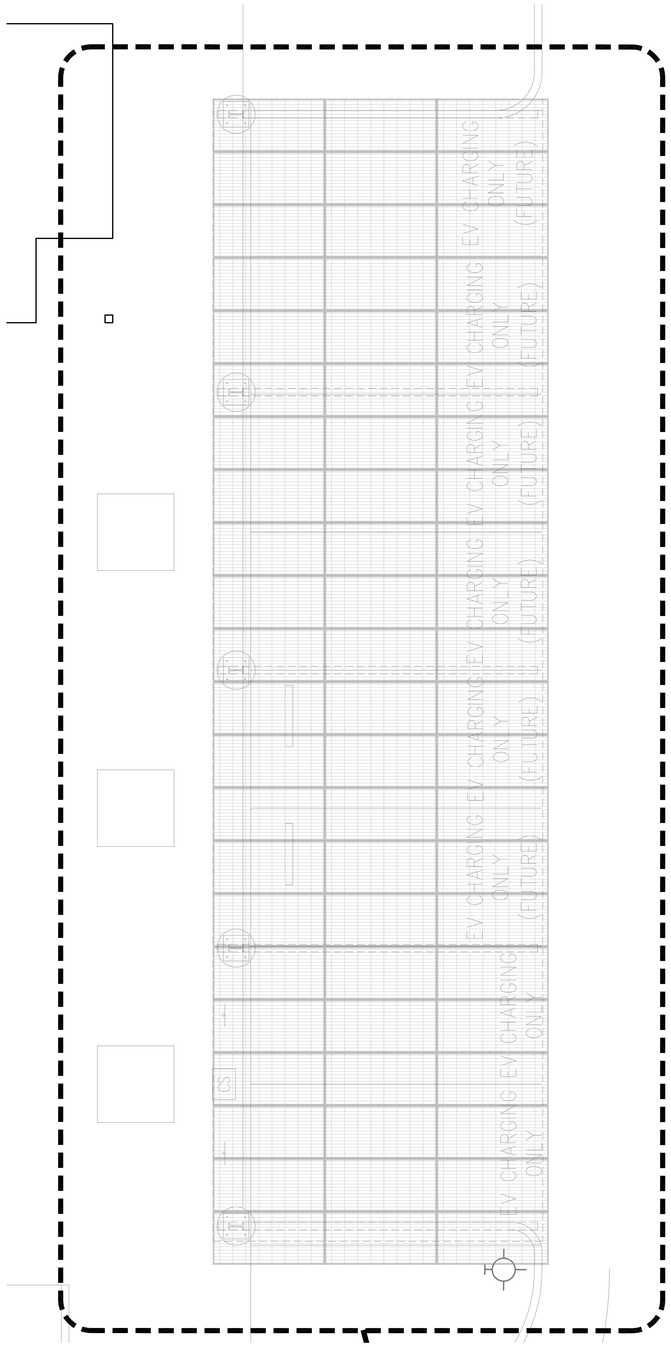

ENLARGED PV PLAN

SCALE: 1/4"=1'-0" (1)

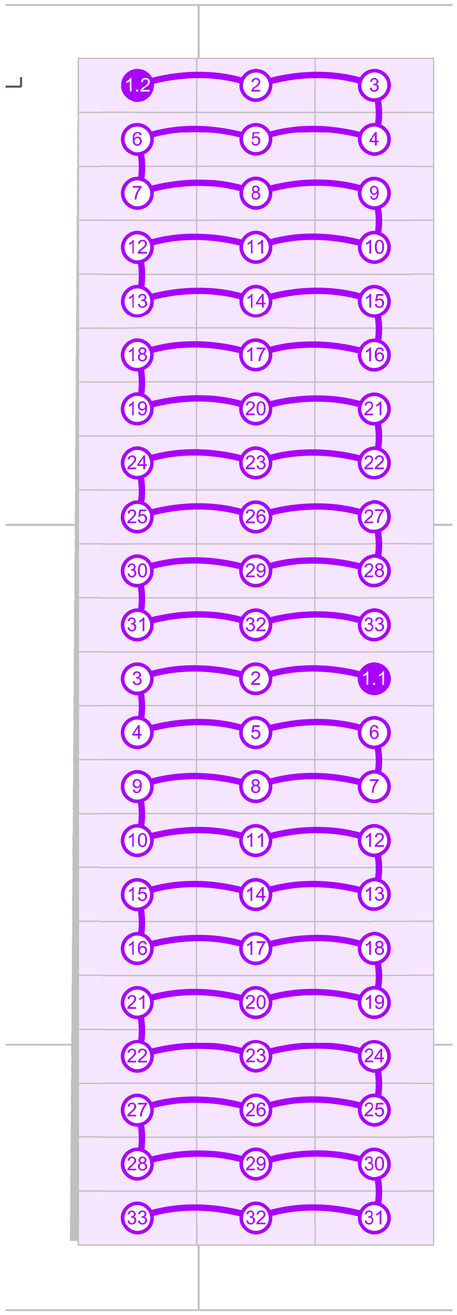

PV STRINGING LAYOUT

SCALE: N.T.S. (2)

solaredge

PERRIS FIRE STATION
STRING DESIGN REPORT

Address: Murrieta Road 2495, Perris, California, 92571, United States | Feb 5, 2026

1	SE30KUS (SE-SIN)	121%
1.1	33 x C651U	33
1.2	33 x C651U	33

KEY NOTE (#)

1. FIRE EXTINGUISHER & CABINET – TYP. OF 2.

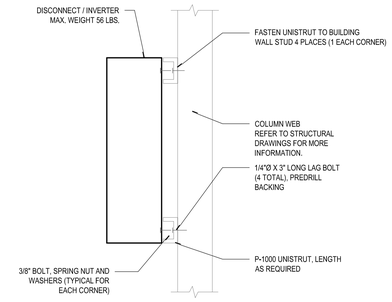

INVERTER MOUNTING DETAIL

SCALE: N.T.S. (3)

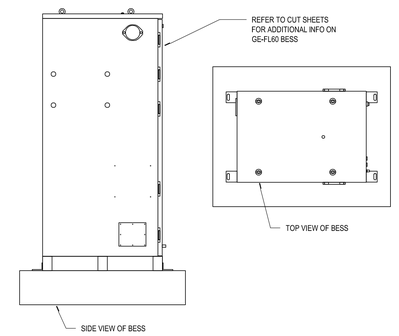

BESS DETAIL

SCALE: 1/4"=1'-0" (4)

STK ARCHITECTURE, INC.
42095 ZEVO DR., TEMECULA, CALIFORNIA 92590-3780
Phone: 951.296.9110 Fax: 951.296.6079 Email: stk@stkinc.com

CONSULTANT:

REVIEWED FOR CODE COMPLIANCE

DESIGN WEST ENGINEERING
MECHANICAL • ELECTRICAL • ENERGY CONSULTANTS
BUILDING BUREAU SOLUTIONS INC.

REGISTERED PROFESSIONAL ENGINEER
BRAULIEN KEMPER
22839
SIGNED:04/24/2026
ELECTRICAL
STATE OF CALIFORNIA

PROJECT ADMINISTERED BY:
CITY OF PERRIS

101 NORTH "D" STREET
PERRIS, CA 92570

PROJECT NAME:
SOUTH FIRE STATION AND ADMINISTRATIVE BUILDING

PROJECT CIP: F077

2495 MURRIETA ROAD
PERRIS, CA 92585

ISSUE INFORMATION:

DATE:	INFORMATION:
11-26-25	95% CD SUBMITTAL
02-05-26	1st PC RESPONSE
02-19-26	2nd PC RESPONSE

SHEET INFORMATION:

STK PROJECT NO.: 365-03-25
SCALE: AS NOTED
DATE: NOVEMBER 2025
PLOT DATE: –
DRAWN BY: JM / JM

SEAL:

SHEET TITLE:
PV - ENLARGED PLAN

SHEET NO.:
E7.3

25-114

1 COMBINER BOX / CIRCUITS / CONDUIT / COMBINER BOX / ENCLOSURES / EMT ENCLOSURES

WARNING
ELECTRICAL SHOCK HAZARD
TERMINALS ON THE LINE AND LOAD SIDES MAY BE ENERGIZED IN THE OPEN POSITION

NEC 690.13(B)

WARNING
TURN OFF PHOTOVOLTAIC AC DISCONNECT PRIOR TO WORKING INSIDE PANEL

NEC 110.27(C) & OSHA 1910.145(f)(7)

2 BUILDING / STRUCTURE

CAUTION
POWER TO THIS BUILDING IS ALSO SUPPLIED FROM THE FOLLOWING SOURCES WITH DISCONNECTS LOCATED AS SHOWN.

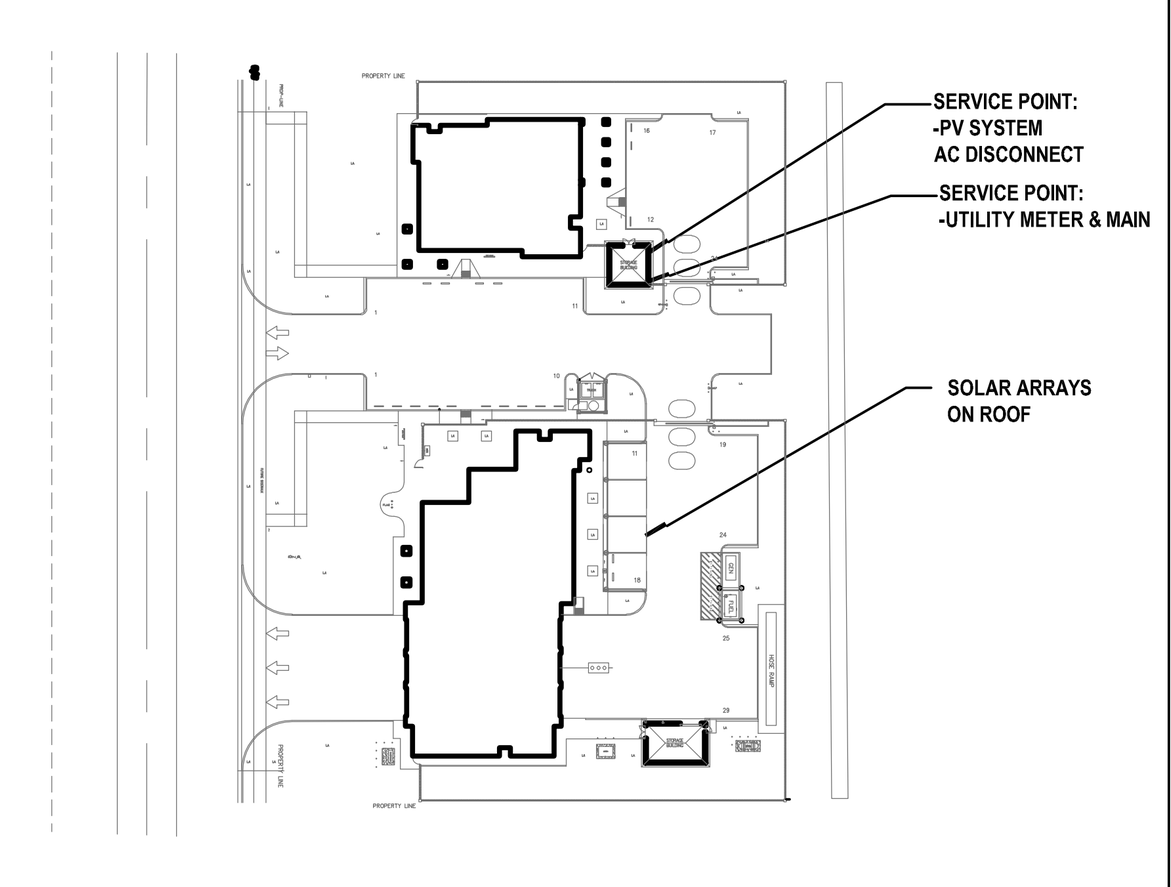

NEC 705.10 & NEC 690.56(B)

3 CONDUITS

* (REFLECTIVE MATERIAL REQUIRED)

WARNING: PHOTOVOLTAIC POWER SOURCE

NEC 690.31(G)(3-4)

WARNING
PHOTOVOLTAIC POWER SOURCE
DO NOT REMOVE UNLESS REPLACED IN EXACT LOCATION - PV POWER CIRCUIT DIRECTLY BELOW

NEC 690.31(G)(1)

4 DC DISCONNECT / BREAKER / RECOMBINER BOX

WARNING
ELECTRICAL SHOCK HAZARD
TERMINALS ON BOTH LINE AND LOAD SIDES MAY BE ENERGIZED IN THE OPEN POSITION
DC VOLTAGE IS ALWAYS PRESENT WHEN SOLAR MODULES ARE EXPOSED TO SUNLIGHT

NEC 690.13(B)

PHOTOVOLTAIC
DC DISCONNECT

NEC 690.13(B)

5 INVERTER

WARNING
ELECTRICAL SHOCK HAZARD
IF A GROUND FAULT IS INDICATED, NORMALLY GROUNDED CONDUCTORS MAY BE UNGROUNDED AND ENERGIZED

NEC 690.13(B)

PHOTOVOLTAIC AC DISCONNECT

RATED AC OUTPUT CURRENT:	36.25A
NOMINAL OPERATING AC VOLTAGE	480V

NEC 690.54

6 PRODUCTION / NET METER (BI-DIRECTIONAL)

WARNING DUAL POWER SOURCE
SECOND SOURCE IS PHOTOVOLTAIC SYSTEM

NEC 705.12(D)(3) & NEC 690.59

7 AC DISCONNECT / BREAKER / POINT OF CONNECTION

PHOTOVOLTAIC
AC DISCONNECT

NEC 690.13(B)

WARNING
ELECTRICAL SHOCK HAZARD
TERMINALS ON THE LINE AND LOAD SIDES MAY BE ENERGIZED IN THE OPEN POSITION

NEC 690.13(B)

PHOTOVOLTAIC AC DISCONNECT

RATED AC OUTPUT CURRENT:	156.25A
NOMINAL OPERATING AC VOLTAGE	480V

NEC 690.54

CAUTION
POWER TO THIS BUILDING IS ALSO SUPPLIED FROM THE FOLLOWING SOURCES WITH DISCONNECTS LOCATED AS SHOWN.

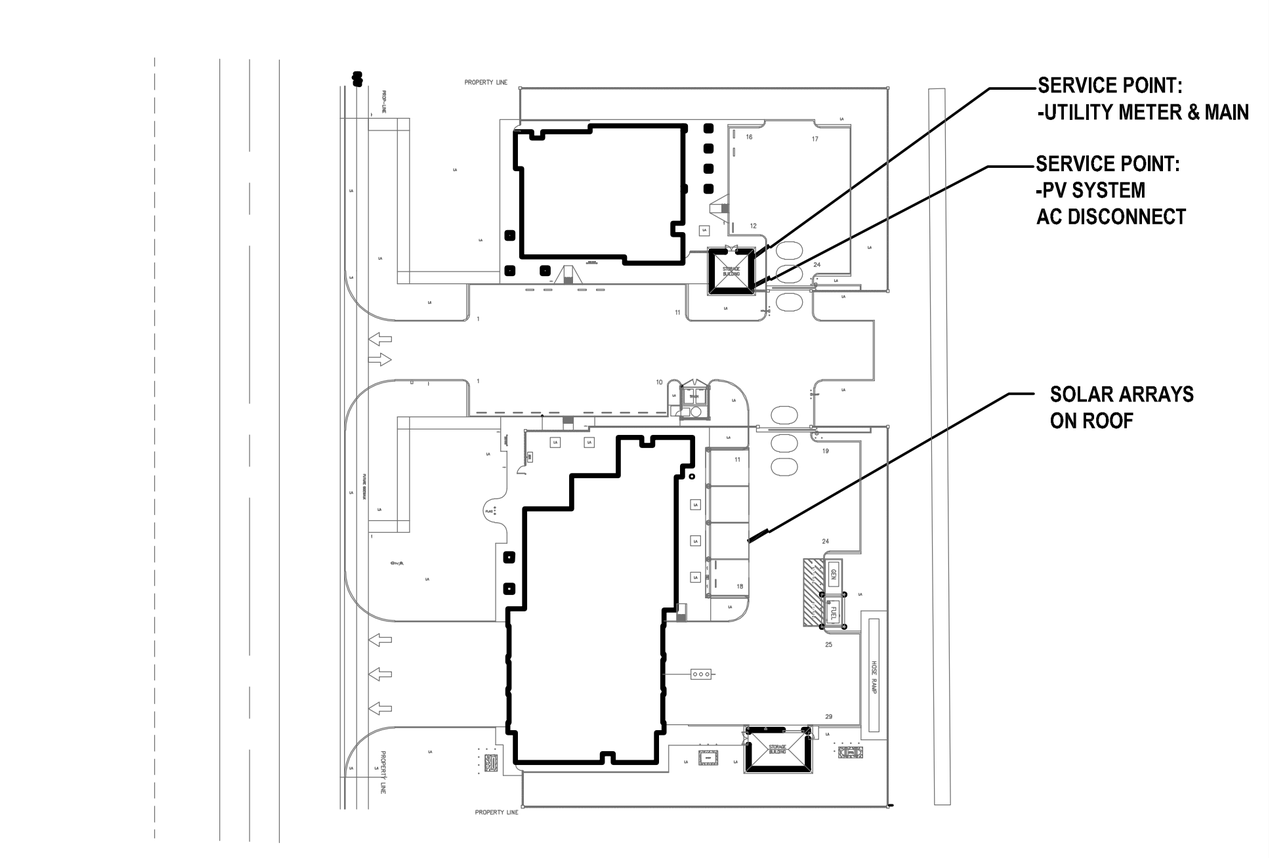

NEC 705.10 & NEC 690.56(B)

8 BREAKER PANEL / PULL BOXES

WARNING
ELECTRICAL SHOCK HAZARD
TERMINALS ON THE LINE AND LOAD SIDES MAY BE ENERGIZED IN THE OPEN POSITION

NEC 690.13(B)

WARNING
TURN OFF PHOTOVOLTAIC AC DISCONNECT PRIOR TO WORKING INSIDE PANEL

NEC 110.27(C) & OSHA 1910.145(F)(7)

WARNING
SINGLE 120-VOLT SUPPLY DO NOT CONNECT MULTIWIRE BRANCH CIRCUITS

NEC 710.15(C) & 692.9(C)

PHOTOVOLTAIC AC DISCONNECT

RATED AC OUTPUT CURRENT:	36.25A
NOMINAL OPERATING AC VOLTAGE	480V

NEC 690.54

DO NOT DISCONNECT UNDER LOAD

NEC 690.15(C) & 690.33(E)(2)

CAUTION
PHOTOVOLTAIC SYSTEM CIRCUIT IS BACKFED

NEC 690.13(F), 705.12(D)(3-4), & 690.59

WARNING DUAL POWER SOURCE
SECOND SOURCE IS PHOTOVOLTAIC SYSTEM

NEC 705.12(D)(3-4) & NEC 690.59

WARNING
POWER SOURCE OUTPUT CONNECTION. DO NOT RELOCATE THIS OVERCURRENT DEVICE.

NEC 705.12(B)(2)(3)(b)

9 MAIN SERVICE DISCONNECT

WARNING
ELECTRICAL SHOCK HAZARD
TERMINALS ON THE LINE AND LOAD SIDES MAY BE ENERGIZED IN THE OPEN POSITION

NEC 690.13(B)

WARNING
TURN OFF PHOTOVOLTAIC AC DISCONNECT PRIOR TO WORKING INSIDE PANEL

NEC 110.27(C) & OSHA 1910.145(F)(7)

MAIN PHOTOVOLTAIC SYSTEM DISCONNECT

NEC 690.13(B)

10 MAIN SERVICE DISCONNECT / UTILITY METER

MAIN PHOTOVOLTAIC SYSTEM DISCONNECT

NEC 690.13(B)

11 FIELD MARKING

NOTE :
ELECTRICAL SERVICE EQUIPMENT MUST BE FIELD MARKED PER THE NEC CODE WHEN IT IS PRESENT IN A BUILDING OR STRUCTURE (OTHER THAN DWELLING UNITS) SUPPORTED BY MORE THAN ONE SERVICE PROVIDER (I.E., PUBLIC UTILITIES SUCH AS ELECTRICITY AND A PV SYSTEM).
THIS INCLUDES ARC FLASH AND INFORMATIONAL LABELING.

a. INVERTER

INV-1.1

NEC 408.4(B)

b. BREAKER PANEL / PULL BOXES / MAIN SERVICE DISCONNECT

WARNING
ARC-FLASH AND SHOCK HAZARD
APPROPRIATE PPE REQUIRED

NEC ARTICLE 110.16 & NFPA 70E ARTICLE 130.5(C)(1),(2),(3)

c. BREAKER PANEL

THIS PANEL FED FROM INV-1.1

NEC 408.4(B)

12 RAPID SHUTDOWN SWITCH (WITHIN 3 FT)

RAPID SHUT DOWN PLACARD PER 2022 CFC 1204.5.1
PLACE AT EACH AC DISCONNECT

SOLAR PV SYSTEM EQUIPPED WITH RAPID SHUTDOWN

TURN RAPID SHUT DOWN SWITCH TO THE "OFF" POSITION TO SHUT DOWN PV SYSTEM AND REDUCE SHOCK HAZARD IN ARRAY

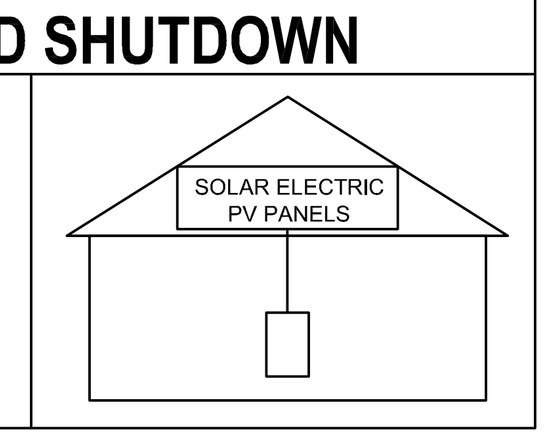

(690.56(C)(1)(a) YELLOW WITH BLACK LETTERING)

RAPID SHUTDOWN SWITCH FOR SOLAR PV SYSTEM

GENERAL NOTES FOR LABELS AND MARKINGS:

1. LABELS AND MARKINGS SHALL BE APPLIED TO THE APPROPRIATE COMPONENTS IN ACCORDANCE WITH THE NEC.
2. SOLAR MODULES ARE SUPPLIED FROM THE MANUFACTURER WITH MARKINGS PRE-APPLIED TO MEET THE REQUIREMENTS OF THE NEC.
3. THE INVERTER IS SUPPLIED FROM THE MANUFACTURER WITH THE APPROPRIATE LABELS AND MARKINGS TO MEET THE REQUIREMENTS OF NEC.
4. ALL OTHER WARNING AND CAUTION LABELS, UNLESS OTHERWISE SPECIFIED, MUST MEET THE REQUIREMENTS OF ANSI Z535.4 - 2011 PER ARTICLE 110.21(B) IN NEC 2014. THE ANSI STANDARD REQUIRES THAT DANGER, WARNING, AND CAUTION SIGNS USE THE STANDARD HEADER COLORS, HEADER TEXT , AND SAFETY ALERT SYMBOL ON EACH LABEL. THE ANSI STANDARD REQUIRES A HEADING THAT IS AT LEAST 50% TALLER THAN THE BODY. WHILE NOT REQUIRED IN THE NEC 2014, THE MESSAGE TEXT SHOULD BE AT LEAST .12" TALL.
5. LABELS SHALL BE BOTH OF THE FOLLOWING:
   A. REFLECTIVE
   B. LETTERS AS FOLLOWS:
      a. ALL LETTERS CAPITALIZED
      b. ALL LETTERS HAVE A MINIMUM HEIGHT OF 3/8 INCHES
      c. ALL LETTERS IN WHITE ON A RED BACKGROUND (YELLOW FOR LABEL "SOLAR PV SYSTEM EQUIPPED WITH RAPID SHUTDOWN")
      d. ADD WARNING SIGN: "DO NOT STEP ON SOLAR MODULES". THE AREA OF SOLAR PANELS DISPLACED LIVE LOAD ON ROOF. SPECIFY ON THE PLANS WEIGHT OF SOLAR PANELS

LABELING REQUIREMENTS FOR ARTICLE 690

NEC 690.12(D) THE TYPE OF PV SYSTEM IS SHOWN IN FIGURE 690.12 (D).

NEC 690.12(D)(2) A RAPID SHUTDOWN INITIATION DEVICE SHALL HAVE A LABEL LOCATED ON OR NO MORE THAN 1 M (3 FT) FROM THE INITIATION DEVICE THAT INCLUDES THE FOLLOWING WORDING: RAPID SHUTDOWN FOR SOLAR PV SYSTEM THE LABEL SHALL BE REFLECTIVE, WITH ALL LETTERS CAPITALIZED AND HAVING A MINIMUM HEIGHT OF 9.5 MM (3⁄8 IN.), IN WHITE ON RED BACKGROUND.

NEC 690.13(B) EACH PV SYSTEM DISCONNECTING MEANS SHALL PLAINLY INDICATE WHETHER IN THE OPEN (OFF) OR CLOSED (ON) POSITION AND BE PERMANENTLY MARKED "PV SYSTEM DISCONNECT" OR EQUIVALENT. ADDITIONAL MARKINGS SHALL BE PERMITTED BASED UPON THE SPECIFIC SYSTEM CONFIGURATION. FOR PVSYSTEM DISCONNECTING MEANS WHERE THE LINE AND LOAD TERMINALS MAY BE ENERGIZED IN THE OPEN POSITION, THE DEVICE SHALL BE MARKED WITH THE FOLLOWING WORDS OR EQUIVALENT: "TERMINALS ON THE LINE AND LOAD SIDES MAY BE ENERGIZED IN THE OPEN POSITION."

NEC 690.15(B) AN ISOLATING DEVICE SHALL BE RATED TO OPEN THE MAXIMUM CIRCUIT CURRENT UNDER LOAD OR BE MARKED "DO NOT DISCONNECT UNDER LOAD" OR "NOT FOR CURRENT INTERRUPTING."

NEC 690.31(B)(2) PV SYSTEM CIRCUIT CONDUCTORS SHALL BE IDENTIFIED AT ALL TERMINATION, CONNECTION, AND SPLICE POINTS BY COLOR CODING, MARKING TAPE, TAGGING, OR OTHER APPROVED MEANS. CONDUCTORS RELYING ON OTHER THAN COLOR CODING FOR POLARITY IDENTIFICATION SHALL BE IDENTIFIED BY AN APPROVED PERMANENT MARKING MEANS SUCH AS LABELING, SLEEVING OR SHRINK-TUBING THAT IS SUITABLE FOR THE CONDUCTOR SIZE.

NEC 690.31(B)(2)(A) THE PV SYSTEM OUTPUT CIRCUIT CONDUCTORS SHALL BE MARKED TO INDICATE POLARITY WHERE CONNECTED TO ENERGY STORAGE SYSTEMS.

NEC 690.31(D)(2) UNLESS LOCATED AND ARRANGED SO THE PURPOSE IS EVIDENT, THE FOLLOWING WIRING METHODS AND ENCLOSURES THAT CONTAIN PV SYSTEM DC CIRCUIT CONDUCTORS SHALL BE MARKED WITH THE WORDING PHOTOVOLTAIC POWER SOURCE OR SOLAR PV DC CIRCUIT BY MEANS OF PERMANENTLY AFFIXED LABELS OR OTHER APPROVED PERMANENT MARKING: (1) EXPOSED RACEWAYS, CABLE TRAYS, AND OTHER WIRING METHODS (2) COVERS OR ENCLOSURES OF PULL BOXES AND JUNCTION BOXES (3) CONDUIT BODIES IN WHICH ANY OF THE AVAILABLE CONDUIT OPENINGS ARE UNUSED.THE LABELS OR MARKINGS SHALL BE VISIBLE AFTER INSTALLATION. ALL LETTERS SHALL BE CAPITALIZED AND SHALL BE A MINIMUM HEIGHT OF 9.5 MM (3⁄8 IN.) IN WHITE ON A RED BACKGROUND. LABELS SHALL APPEAR ON EVERY SECTION OF THE WIRING SYSTEM THAT IS SEPARATED BY ENCLOSURES, WALLS, PARTITIONS, CEILINGS, OR FLOORS. SPACING BETWEEN LABELS OR MARKINGS, OR BETWEEN A LABEL AND A MARKING, SHALL NOT BE MORE THAN 3 M (10 FT). LABELS REQUIRED BY THIS SECTION SHALL BE SUITABLE FOR THE ENVIRONMENT WHERE THEY ARE INSTALLED.

NEC 690.31(E) SOLIDLY GROUNDED BIPOLAR PV SYSTEMS SHALL BE CLEARLY MARKED WITH A PERMANENT, LEGIBLE WARNING NOTICE INDICATING THAT THE DISCONNECTION OF THE GROUNDED CONDUCTOR(S) MAY RESULT IN OVERVOLTAGE ON THE EQUIPMENT.

NEC 690.33(D)(2) INTERRUPTION OF CIRCUIT. CONNECTORS SHALL BE A TYPE THAT REQUIRES THE USE OF A TOOL TO OPEN AND MARKED "DO NOT DISCONNECT UNDER LOAD" OR "NOT FOR CURRENT INTERRUPTING."

NEC 690.4 (G) PV EQUIPMENT FLOATING ON OR ATTACHED TO STRUCTURES FLOATING ON BODIES OF WATER SHALL BE IDENTIFIED AS BEING SUITABLE FOR THE PURPOSE AND SHALL UTILIZE WIRING METHODS THAT ALLOW FOR ANY EXPECTED MOVEMENT OF THE EQUIPMENT. INFORMATIONAL NOTE: PV EQUIPMENT IN THESE INSTALLATIONS IS OFTEN SUBJECT TO INCREASED LEVELS OF HUMIDITY, CORROSION, AND MECHANICAL AND STRUCTURAL STRESSES. EXPECTED MOVEMENT OF FLOATING PV ARRAYS IS OFTEN INCLUDED IN THE STRUCTURAL DESIGN.

NEC 690.53 A PERMANENT READILY VISIBLE LABEL INDICATING THE HIGHEST MAXIMUM DC VOLTAGE IN A PV SYSTEM, CALCULATED IN ACCORDANCE WITH 690.7, SHALL BE PROVIDED BY THE INSTALLER AT ONE OF THE FOLLOWING LOCATIONS: (1) DC PV SYSTEM DISCONNECTING MEANS (2) PV SYSTEM ELECTRONIC POWER CONVERSION EQUIPMENT (3) DISTRIBUTION EQUIPMENT ASSOCIATED WITH THE PV SYSTEM.

NEC 690.54 ALL INTERACTIVE SYSTEM(S) POINTS OF INTERCONNECTION WITH OTHER SOURCES SHALL BE MARKED AT AN ACCESSIBLE LOCATION AT THE DISCONNECTING MEANS AS A POWER SOURCE AND WITH THE RATED AC OUTPUT CURRENT AND THE NOMINAL OPERATING AC VOLTAGE.

NEC 690.56 PLAQUES OR DIRECTORIES SHALL BE INSTALLED IN ACCORDANCE WITH 705.10.

NEC 690.59 PV SYSTEMS CONNECTED TO OTHER SOURCES SHALL BE INSTALLED IN ACCORDANCE WITH PARTS I AND II OF ARTICLE 705.

NEC 692.52 A FUEL CELL SYSTEM THAT STORES ELECTRICAL ENERGY SHALL REQUIRE THE FOLLOWING WARNING SIGN, OR EQUIVALENT, AT THE LOCATION OF THE SERVICE DISCONNECTING MEANS OF THE PREMISES: WARNING FUEL CELL POWER SYSTEM CONTAINS ELECTRICAL ENERGY STORAGE DEVICES.

NEC 705.12(B)(3) THE SUM OF THE AMPERE RATINGS OF ALL OVERCURRENT DEVICES ON PANELBOARDS, BOTH LOAD AND SUPPLY DEVICES, EXCLUDING THE RATING OF THE OVERCURRENT DEVICE PROTECTING THE BUSBAR, SHALL NOT EXCEED THE AMPACITY OF THE BUSBAR. THE RATING OF THE OVERCURRENT DEVICE PROTECTING THE BUSBAR SHALL NOT EXCEED THE RATING OF THE BUSBAR. PERMANENT WARNING LABELS SHALL BE APPLIED TO DISTRIBUTION EQUIPMENT DISPLAYING THE FOLLOWING OR EQUIVALENT WORDING: WARNING: EQUIPMENT FED BY MULTIPLE SOURCES. TOTAL RATING OF ALL OVERCURRENT DEVICES EXCLUDING MAIN SUPPLY OVERCURRENT DEVICE SHALL NOT EXCEED AMPACITY OF BUSBAR.

NEC 705.30(C) EQUIPMENT CONTAINING OVERCURRENT DEVICES SUPPLIED FROM INTERCONNECTED POWER SOURCES SHALL BE MARKED TO INDICATE THE PRESENCE OF ALL SOURCES.

NEC 705.30(D) SUITABLE FOR BACKFEED. FUSED DISCONNECTS, UNLESS OTHERWISE MARKED, SHALL BE CONSIDERED SUITABLE FOR BACKFEED.

NEC 706.15(C) EACH ESS DISCONNECTING MEANS SHALL PLAINLY INDICATE WHETHER IT IS IN THE OPEN (ON) OR CLOSED (OFF) POSITION AND BE PERMANENTLY MARKED "ENERGY STORAGE SYSTEM DISCONNECT" THE DISCONNECTING MEANS SHALL BE LEGIBLY MARKED IN THE FIELD TO INDICATE THE FOLLOWING:
- NOMINAL ESS AC VOLTAGE AND MAXIMUM ESS DC VOLTAGE
- AVAILABLE FAULT CURRENT DERIVED FROM THE ESS
- AN ARC-FLASH LABEL APPLIED IN ACCORDANCE WITH ACCEPTABLE INDUSTRY PRACTICE
- DATA CALCULATION WAS PERFORMED

REQUIREMENTS FOR ELECTRICAL INSTALLATIONS (FIELD MARKING)

NEC 110.16 ELECTRICAL EQUIPMENT THAT IS IN OTHER THAN DWELLING UNITS SHALL BE FIELD MARKED TO WARN QUALIFIED PERSONS OF A POTENTIAL ARC FLASH HAZARD.

NEC 110.16(A) ARC FLASH: ELECTRICAL EQUIPMENT, SUCH AS SWITCHBOARDS, SWITCHGEAR, PANELBOARDS, INDUSTRIAL CONTROL PANELS, METER SOCKET ENCLOSURES, AND MOTOR CONTROL CENTERS, THAT IS IN OTHER THAN DWELLING UNITS, AND IS LIKELY TO REQUIRE EXAMINATION, ADJUSTMENT, SERVICING, OR MAINTENANCE WHILE ENERGIZED, SHALL BE FIELD OR FACTORY MARKED TO WARN QUALIFIED PERSONS OF POTENTIAL ELECTRIC ARC FLASH HAZARDS. THE MARKING SHALL MEET THE REQUIREMENTS IN 110.21(B) AND SHALL BE LOCATED SO AS TO BE CLEARLY VISIBLE TO QUALIFIED PERSONS BEFORE EXAMINATION, ADJUSTMENT, SERVICING, OR MAINTENANCE OF THE EQUIPMENT.

NEC 110.16(B) IN OTHER THAN DWELLING UNITS, IN ADDITION TO THE REQUIREMENTS IN (A), A PERMANENT LABEL SHALL BE FIELD OR FACTORY APPLIED TO SERVICE EQUIPMENT RATED 1200 AMPS OR MORE THE LABEL SHALL MEET THE REQUIREMENTS OF 110.21(B) AND CONTAIN THE FOLLOWING INFORMATION:
- NOMINAL SYSTEM VOLTAGE
- AVAILABLE FAULT CURRENT AT THE SERVICE OVERCURRENT PROTECTIVE DEVICES
- THE CLEARING TIME OF SERVICE OVERCURRENT PROTECTIVE DEVICES BASED ON THE AVAILABLE FAULT CURRENT AT THE SERVICE EQUIPMENT
- THE DATE THE LABEL WAS APPLIED

EXCEPTION: SERVICE EQUIPMENT LABELING SHALL NOT BE REQUIRED IF AN ARC FLASH LABEL IS APPLIED IN ACCORDANCE WITH ACCEPTABLE INDUSTRY PRACTICE.

NEC 110.21(B)(1) FIELD APPLIED HAZARD MARKINGS: THE MARKING SHALL WARN OF THE HAZARDS USING EFFECTIVE WORDS, COLORS, SYMBOLS, OR ANY COMBINATION THEREOF.

NEC 110.21(B)(3) THE LABEL SHALL BE OF SUFFICIENT DURABILITY TO WITHSTAND THE ENVIRONMENT INVOLVED.

NEC 110.22(B) ENGINEERED SERIES COMBINATION SYSTEMS: EQUIPMENT ENCLOSURES FOR CIRCUIT BREAKERS OR FUSES APPLIED IN COMPLIANCE WITH SERIES COMBINATION RATINGS SELECTED UNDER ENGINEERING SUPERVISION IN ACCORDANCE WITH 250.86(A) SHALL BE LEGIBLY MARKED IN THE FIELD AS DIRECTED BY THE ENGINEER TO INDICATE THE EQUIPMENT HAS BEEN APPLIED WITH A SERIES COMBINATION RATING. THE MARKING SHALL MEET THE REQUIREMENTS IN 110.21(B).

NEC 110.24(A) FIELD MARKING: SERVICE EQUIPMENT AT OTHER THAN DWELLING UNITS SHALL BE LEGIBLY MARKED IN THE FIELD WITH THE MAXIMUM AVAILABLE FAULT CURRENT. THE FIELD MARKING(S) SHALL INCLUDE THE DATE THE FAULT-CURRENT CALCULATION WAS PERFORMED AND BE OF SUFFICIENT DURABILITY TO WITHSTAND THE ENVIRONMENT INVOLVED. THE CALCULATION SHALL BE DOCUMENTED AND MADE AVAILABLE TO THOSE AUTHORIZED TO DESIGN, INSTALL, INSPECT, MAINTAIN, OR OPERATE THE SYSTEM.

NEC 110.27(C) ENTRANCES TO ROOMS OR OTHER GUARDED LOCATIONS THAT CONTAIN EXPOSED LIVE PARTS SHALL BE MARKED WITH CONSPICUOUS WARNING SIGNS FORBIDDING UNQUALIFIED PERSONS TO ENTER.

NEC 210.5(C)(1)(B) POSTING OF IDENTIFICATION MEANS: THE METHOD UTILIZED FOR CONDUCTORS ORIGINATING WITHIN EACH BRANCH-CIRCUIT PANELBOARD OR SIMILAR BRANCH CIRCUIT DISTRIBUTION EQUIPMENT SHALL BE DOCUMENTED IN A MANNER THAT IS READILY AVAILABLE AND SHALL BE PERMANENTLY POSTED AT EACH BRANCH-CIRCUIT PANELBOARD OR SIMILAR BRANCH-CIRCUIT DISTRIBUTION EQUIPMENT. THE LABEL SHALL BE OF SUFFICIENT DURABILITY TO WITHSTAND THE ENVIRONMENT INVOLVED AND SHALL NOT BE HANDWRITTEN.

NEC 230.2(E) IDENTIFICATION: WHERE A BUILDING OR STRUCTURE IS SUPPLIED BY MORE THAN ONE SERVICE, OR ANY COMBINATION OF BRANCH CIRCUITS, FEEDERS, AND SERVICES, A PERMANENT PLAQUE OR DIRECTORY SHALL BE INSTALLED AT EACH SERVICE DISCONNECT LOCATION DENOTING ALL OTHER SERVICES, FEEDERS, AND BRANCH CIRCUITS SUPPLYING THAT BUILDING OR STRUCTURE AND THE AREA SERVED BY EACH.

NEC 408.4(B) SOURCE OF SUPPLY: ALL SWITCHBOARDS, SWITCHGEAR, AND PANELBOARDS SUPPLIED BY FEEDER(S) IN OTHER THAN ONE- OR TWO-FAMILY DWELLINGS SHALL BE PERMANENTLY MARKED TO INDICATE EACH DEVICE OR EQUIPMENT WHERE THE POWER ORIGINATES. THE LABEL SHALL BE PERMANENTLY AFFIXED, OF SUFFICIENT DURABILITY TO WITHSTAND THE ENVIRONMENT INVOLVED AND NOT BE HANDWRITTEN.

NEC 705.10 PERMANENT PLAQUES, LABELS, OR DIRECTORIES SHALL BE INSTALLED AT EACH SERVICE EQUIPMENT LOCATION, OR AT AN APPROVED READILY VISIBLE LOCATION IN ACCORDANCE WITH (1), (2), AND (3). 1. DENOTE THE LOCATION OF EACH POWER SOURCE DISCONNECTING MEANS FOR THE BUILDING OR STRUCTURE. EXCEPTION: INSTALLATIONS WITH MULTIPLE CO-LOCATED POWER PRODUCTION SOURCES SHALL BE PERMITTED TO BE IDENTIFIED AS A GROUP(S). THE PLAQUE OR DIRECTORY SHALL NOT BE REQUIRED TO IDENTIFY EACH POWER SOURCE INDIVIDUALLY. 2. INDICATE THE EMERGENCY TELEPHONE NUMBERS OF ANY OFF-SITE ENTITIES SERVICING THE POWER SOURCE SYSTEMS. INFORMATIONAL NOTE: SEE NFPA 1, 11.12.2.1.5 INSTALLER INFORMATION. 3. BE MARKED WITH THE WORDING "CAUTION: MULTIPLE SOURCES OF POWER." THE MARKING SHALL COMPLY WITH 110.21(B).

NEC 705.20(7) WHERE THE LINE AND LOAD TERMINALS ARE CAPABLE OF BEING ENERGIZED IN THE OPEN POSITION, BE MARKED WITH THE FOLLOWING WORDS OR EQUIVALENT: WARNING – ELECTRIC SHOCK HAZARD TERMINALS ON THE LINE AND LOAD SIDES MAY BE ENERGIZED IN THE OPEN POSITION. INFORMATIONAL NOTE: WITH INTERCONNECTED POWER SOURCES, SOME EQUIPMENT, INCLUDING SWITCHES AND FUSES, IS CAPABLE OF BEING ENERGIZED FROM BOTH DIRECTIONS.

NEC 705.12(B)(3) PERMANENT WARNING LABELS SHALL BE APPLIED TO DISTRIBUTION EQUIPMENT DISPLAYING THE FOLLOWING OR EQUIVALENT WORDING: THIS EQUIPMENT FED BY MULTIPLE SOURCES: TOTAL RATING OF ALL OVERCURRENT DEVICES EXCLUDING MAIN POWER SUPPLY SHALL NOT EXCEED AMPACITY OF BUSBAR.

NEC 705.12(B)(2) A PERMANENT WARNING LABEL SHALL BE APPLIED TO THE DISTRIBUTION EQUIPMENT ADJACENT TO THE BACK-FED BREAKER FROM THE INVERTER POWER SOURCE THAT DISPLAYS THE FOLLOWING OR EQUIVALENT WORDING: "WARNING: POWER OUTPUT CONNECTION. DO NOT RELOCATE THIS OVERCURRENT DRIVE."

NEC 710.10 A PERMANENT PLAQUE, LABEL, OR DIRECTORY SHALL BE INSTALLED AT A BUILDING SUPPLIED BY A STAND-ALONE SYSTEM AT THE POWER SOURCE DISCONNECTING MEANS LOCATION, OR AT AN APPROVED READILY VISIBLE LOCATION. THE PLAQUE, LABEL, OR DIRECTORY SHALL DENOTE THE LOCATION OF EACH POWER SOURCE DISCONNECTING MEANS FOR THE BUILDING OR BE GROUPED WITH OTHER PLAQUES OR DIRECTORIES FOR OTHER ON-SITE SOURCES. WHERE MULTIPLE SOURCES SUPPLY THE BUILDING, MARKINGS SHALL COMPLY WITH 705.10.

NEC 710.15(C) STAND-ALONE SYSTEMS SHALL BE PERMITTED TO SUPPLY 120 VOLTS TO SINGLE-PHASE, 3-WIRE,120/240-VOLT SERVICE EQUIPMENT OR DISTRIBUTION PANELS WHERE THERE ARE NO 240-VOLT OUTLETS AND WHERE THERE ARE NO MULTIWIRE BRANCH CIRCUITS. IN ALL INSTALLATIONS, THE SUM OF THE RATINGS OF THE POWER SOURCES SHALL BE LESS THAN THE RATING OF THE NEUTRAL BUS IN THE SERVICE EQUIPMENT. THIS EQUIPMENT SHALL BE MARKED WITH THE FOLLOWING WORDS OR EQUIVALENT: "WARNING: SINGLE 120-VOLT SUPPLY - DO NOT CONNECT MULTIWIRE BRANCH CIRCUITS."

NFPA 2012 130.5(C) SAME AS NEC110.16 BUT INCLUDES ADDITIONAL LABEL INFORMATION THAT IS REQUIRED AFTER 9/30/2011. CHECK LATEST 2012 NFPA ARC FLASH REQUIREMENTS.

OSHA 1910.145(F)(7) WARNING TAGS ARE USED TO REPRESENT A HAZARD LEVEL BETWEEN "CAUTION" AND "DANGER."

STK ARCHITECTURE, INC.
42095 ZEVO DR., TEMECULA, CALIFORNIA 92590-3780
Phone: 951.296.9110 Fax: 951.296.6079 Email: stk@stkinc.com

CONSULTANT:

REVIEWED FOR CODE COMPLIANCE
BUILDING BUREAU SOLUTIONS INC.

DESIGN WEST ENGINEERING
MECHANICAL • ELECTRICAL • ENERGY CONSULTANTS

REGISTERED PROFESSIONAL ENGINEER
BRADEN KEMP
22839
SIGNED:04/24/2026
ELECTRICAL
STATE OF CALIFORNIA

PROJECT ADMINISTERED BY:
CITY OF PERRIS
101 NORTH "D" STREET
PERRIS, CA 92570

PROJECT NAME:
SOUTH FIRE STATION AND ADMINISTRATIVE BUILDING
PROJECT CIP: F077
2495 MURRIETA ROAD
PERRIS, CA 92585

ISSUE INFORMATION:

DATE:	INFORMATION:
11-26-25	95% CD SUBMITTAL
02-05-26	1 1st PC RESPONSE
02-19-26	2 2nd PC RESPONSE

SHEET INFORMATION:

STK PROJECT NO.:	365-03-25
SCALE:	AS NOTED
DATE:	NOVEMBER 2025
PLOT DATE:	–
DRAWN BY:	JM / JM

SEAL:

SHEET TITLE:
PV SIGNAGE SHEET

SHEET NO.:
E7.4

Small-Scale C&I Battery Cabinet



Model			GE-FL60	GE-FH60
Main Parameter				
Cell Chemistry			$LiFePO_4$	
Module Energy (kWh)			5.12	
Module Nominal Voltage (V)			51.2	
System Capacity (Ah)			200	100
Battery Module Qty In Series			6	12
System Nominal Voltage (V)			307.2	614.4
System Operating Voltage (V)			268.8 ~ 350.4	480 ~ 700
System Energy (kWh)			61.44	
System Usable Energy (kWh)			55.29	
Rated DC Power			61.44	
Charge / Discharge Current (A)	Recommend		50	
	Nominal		100	
	Peak Discharge (2 mins, 25°C)		125	
Status Indicator			Green: Battery System Running / Red : Battery System Alarm	
Communication Port			CAN2.0 / RS485	
Humidity			5% ~ 85%RH	
Altitude			≤2000m	
IP Rating of Enclosure			IP55	
Dimension (W × D × H, mm)			735 × 1045 × 2235	
Weight Approximate (kg)			1015	
Installation Method			Floor-Mounted	
Storage Temperature (°C)			0 ~ 35	
Operating Temperature (°C)			-30 ~ 60 (>45 derating)	
Recommend Depth of Discharge			90%	
Cycle Life			≥6000 (25±2°C, 0.5C / 0.5C, EOL70%)	
Warranty			10 years	
Certification			UN38.3, UL1973, UL9540A, UL9540	

Deye



Commercial Power Optimizer

USA Domestic Content Eligible*

C651U

POWER OPTIMIZER

25 YEAR WARRANTY



Made in the USA

SolarEdge's USA-manufactured offering for C&I rooftops, for power optimization at the module level

- **Eligible for Domestic Content***
  - SolarEdge USA-manufactured power optimizers, when paired with certain SolarEdge USA-manufactured inverters, are intended to be eligible for the enhanced federal income tax credit for domestic content
- **Higher Energy Yields**
  - Generates maximum power from each PV module
  - High efficiency (99.5%)
  - Supports high power and bifacial PV modules, including G12 modules
- **Enhanced Monitoring and Visibility**
  - Maximum system visibility up to the individual module level
  - Pinpointed fault detection and remote troubleshooting
- **Maximum Protection with Built-in Safety**
  - Designed to automatically reduce high DC voltage to touch-safe levels, upon grid/inverter shutdown, with SafeDC™
  - Includes SolarEdge Sense Connect, designed to prevent arcs by monitoring Power Optimizer connectors for overheating
  - Certified to Photovoltaic Rapid Shutdown, according to NEC 2014 – 2023

* Manufactured by SolarEdge with the intent to be eligible for inclusion under the elective safe harbor in calculating the Domestic Cost Percentage under the "Rooftop (MLPE)" category (under IRS Notice 2024-41). The PCBA, Electrical Parts, and Enclosure are domestically manufactured to meet the requirements of eligibility to be considered for the ITC domestic content bonus adder. SolarEdge does not provide tax and/or legal advice. You should consult with your own legal and/or tax advisor(s) regarding the eligibility of your project for the ITC or PTC, including the 10% domestic content bonus, to determine how the applicable rules apply to your particular project. The forward-looking statements in this datasheet are accurate as of the date herein and are subject to change. For more information, please contact your local SolarEdge sales representative.

solaredge.com

solaredge

Power Optimizer

USA Domestic Content Eligible for North America

C651U

Power Optimizer Model	C651U	
INPUT		
Rated Input DC Power(1)	650	W
Absolute Maximum Input Voltage (Voc)	80	Vdc
MPPT Operating Range	12.5 – 80	Vdc
Maximum Short Circuit Current (Isc) of Connected PV Module(2)	20	Adc
Maximum Adjusted Short Circuit Current (with Safety Factor)(3)	25	Adc
Maximum Efficiency	99.5	%
Weighted Efficiency	98.8	%
Overvoltage Category	II	
OUTPUT DURING OPERATION		
Maximum Output Power	650	Wdc
Maximum Output Current	24	Adc
Maximum Output Voltage	60	Vdc
SAFETY FEATURES		
SafeDC™	Yes	
Safety Output Voltage per Power Optimizer	0.5 ± 0.075	Vdc
Sense Connect	Yes	
Photovoltaic Rapid Shutdown System	Yes, NEC 2014 – 2023	
STANDARD COMPLIANCE		
EMC	FCC Part 15; IEC 61000-6-2; IEC 61000-6-3	
Safety	IEC62109-1 (class II safety); UL 1741; UL 3741; CSA C22.2#107.1	
Material	UL94 V-0, UV Resistant	
RoHS	Yes	
Fire Safety	VDE-AR-E 2100-712:2013-05	
INSTALLATION SPECIFICATIONS		
Compatible SolarEdge Inverters(4)	Commercial Three Phase Inverters with one of the following part number structures: USE-SIN-USxxlxxxx, SE-DBL-USxxlxxxx, SE-TRI-USxxlxxxx	
Maximum Allowed System Voltage	1000	Vdc
Dimensions (W x L x H)	128 x 155 x 52 / 5.03 x 6.10 x 2.05	mm / in
Weight	1080 / 2.38	gr / lb
Input Connector	MC4(5)	
Input Wire Length	(+) 1.4, (-) 1.4 / (+) 4.59, (-) 4.59(6)	m / ft
Output Connector	MC4	
Output Wire Length	(+) 3.0 (-) 0.10 / (+) 9.84, (-) 0.32	m / ft
Operating Temperature Range(7)	-40 to +85 / -40 to +185	˚C / ˚F
Protection Rating	IP68 / NEMA6P	
Relative Humidity	0 – 100	%

(1) Modules with a front side maximum power of up to 715W at STC are allowed. Up to +5% power tolerance is allowed.
(2) When using bifacial modules, consider only the front side Isc at STC (0% back side gain). For details, see here.
(3) Adjusted for ambient temperature, irradiance, bifacial gain, safety factor, and so on, in accordance with NEC and CSA.
(4) For detailed inverter compatibility information, see here.
(5) For other connector types please contact SolarEdge.
(6) The Sense Connect feature is only enabled on the output wire connectors. For details, see here.
(7) For ambient temperatures above +65°C / +149°F, power derating is applied. For details, see here.

© SolarEdge Technologies, Ltd. All rights reserved. SOLAREDGE, the SolarEdge logo, OPTIMIZED BY SOLAREDGE are trademarks or registered trademarks of SolarEdge Technologies, Inc. All other trademarks mentioned herein are trademarks of their respective owners. Date: January 26, 2025 DS-000245-NAM. Subject to change without notice.

RoHS Intertek

Three Phase Inverters for the 277/480V Grid for North America

SE20KUS / SE30KUS / SE33.3KUS

INVERTERS

12-20 YEAR WARRANTY



The best choice for SolarEdge enabled systems

- Quick and easy inverter commissioning directly from a smartphone using the SolarEdge SetApp
- Specifically designed to work with power optimizers
- Superior efficiency (98%)
- Fixed voltage inverter for longer strings
- Integrated Safety Switch
- UL1741 SA certified, for CPUC Rule 21 grid compliance
- Integrated arc fault protection and rapid shutdown for NEC 2014 and 2017, per article 690.11 and 690.12
- Built-in module-level monitoring
- Internet connection through Ethernet or Wireless
- Small, lightweight, and easy to install outdoors or indoors on provided bracket
- Supplied with RS485 Surge Protection Device, to better withstand lightning events

solaredge.com

solaredge

Three Phase Inverters for the 277/480V Grid(1) for North America

SE20KUS / SE30KUS / SE33.3KUS

MODEL NUMBER	SE20KUS	SE30KUS	SE33.3KUS	
APPLICABLE TO INVERTERS WITH PART NUMBER	SEXXK-XXXXXBXX4			
OUTPUT				
Rated AC Power Output	20000	30000	33300	VA
Maximum AC Power Output	20000	30000	33300	VA
Output Line Connections	3 phase, 4-wire / PE (L1-L2-L3-N), TN, TT			
AC Output Voltage Minimum-Nominal-Maximum(2) (L-N)	244-277-305			Vac
AC Output Voltage Minimum-Nominal-Maximum(2) (L-L)	422.5-480-529			Vac
AC Frequency Min-Nom-Max(2)	59.3 - 60 - 60.5			Hz
Maximum Continuous Output Current (per Phase)	24	36.5	40	A
GFDI Threshold	1			A
Utility Monitoring, Islanding Protection, Country Configurable Set Points	Yes			
THD	≤ 3			%
INPUT				
Maximum DC Power (Module STC)	27000	40500	45000	W
Transformer-less, Ungrounded	Yes			
Maximum Input Voltage DC to Gnd	490			Vdc
Maximum Input Voltage DC+ to DC-	1000			Vdc
Nominal Input Voltage DC to Gnd	420			Vdc
Nominal Input Voltage DC+ to DC-	850			Vdc
Maximum Input Current	26.5	39	40	Adc
Maximum Input Short Circuit Current	45			Adc
Reverse-Polarity Protection	Yes			
Ground-Fault Isolation Detection	1MΩ Sensitivity	350kΩ Sensitivity(3)		
CEC Weighted Efficiency	98	98.5		%
Night-time Power Consumption	< 3	< 4		W
ADDITIONAL FEATURES				
Supported Communication Interfaces	RS485, Ethernet, Built-in Cellular (optional)			
Inverter Commissioning	With the SetApp mobile application using built-in access point for local connection			
Rapid Shutdown – NEC 2014 and 2017 690.12	Automatic Rapid Shutdown upon AC Grid Disconnect(4)			
RS485 Surge Protection Plug-in	Supplied with the inverter			
Smart Energy Management	Export Limitation			
STANDARD COMPLIANCE				
Safety	UL1741, UL1741 SA, UL1699B, CSA C22.2, Canadian AFCI according to T.I.L. M-07			
Grid Connection Standards	IEEE1547, Rule 21, Rule 14 (HI)			
Emissions	FCC part15 class B			
INSTALLATION SPECIFICATIONS				
AC output conduit size / AWG range	3/4" minimum / 12-6 AWG	3/4" minimum / 8-4 AWG		
DC input conduit size / AWG range	3/4" minimum / 12-6 AWG			
Number of DC inputs	2 pairs	3 pairs(4)		
Dimensions (H x W x D)	21 x 12.5 x 10.5 / 540 x 315 x 260			in / mm
Dimensions with Safety Switch (H x W x D)	30.5 x 12.5 x 10.5 / 775 x 315 x 260			in / mm
Weight	73.2 / 33.2	93.6 / 42.5		lb / kg
Weight with Safety Switch	79.7 / 36.2	100.3 / 45.5		lb / kg
Cooling	Fans (user replaceable)			
Noise	< 50	< 55		dBA
Operating Temperature Range	-40 to +140 / -40 to +60(5)			˚F / ˚C
Protection Rating	NEMA 3R			

(1) For 120/208V inverters refer to: https://www.solaredge.com/sites/default/files/se-three-phase-us-inverter-208V-setapp-datasheet.pdf
(2) For other regional settings please contact SolarEdge support
(3) Where permitted by local regulations
(4) Field replacement kit for 1 pair of inputs P/N: DCD-3PH-1TBK; Field replacement kit for 3 pairs of fuses and holders P/N: DCD-3PH-6FHK-S1
(5) For power de-rating information refer to: https://www.solaredge.com/sites/default/files/se-temperature-derating-note-na.pdf

© SolarEdge Technologies, Inc. All rights reserved. SOLAREDGE, the SolarEdge logo, OPTIMIZED BY SOLAREDGE are trademarks or registered trademarks of SolarEdge Technologies, Inc. All other trademarks mentioned herein are trademarks of their respective owners. Date: 07/2020/V01/ENG NAM. Subject to change without notice.

CE

www.jinkosolar.com

JinKO Solar — Building Your Trust in Solar

Bifacial HC 72M 520-540 Watt

MONOCRYSTALLINE MODULE

Positive power tolerance of 0~+3%

ISO9001:2015, ISO14001:2015, ISO45001:2018 certified factory.

IEC61215(2016), IEC61730(2016), certified products.

(Made in China/Malaysia/Vietnam/U.S)

Tiger Pro

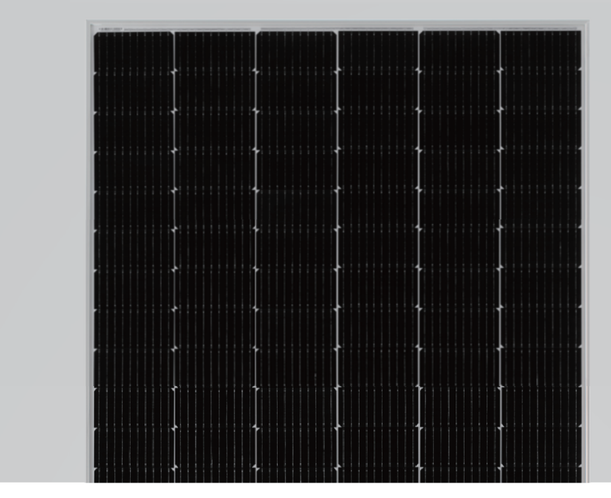



KEY FEATURES

Multi Busbar Solar Cell
MBB solar cell adopts new technology to improve the efficiency of modules, offers a better aesthetic appearance, making it perfect for rooftop installation.

Higher Lifetime Power Yield:
0.45% annual power degradation
30 year linear power warranty

Higher power output:
Module power increases 5-25% generally (per different reflective condition)
lower LCOE and higher IRR

Better low-light performance:
Excellent performance in low-light environments
(e.g. early morning, dusk, and cloud, etc.)

PV CYCLE · TÜV Rheinland · CE · POSITIVE QUALITY · CLEAN ENERGY COUNCIL MEMBER

LINEAR PERFORMANCE WARRANTY

12 Year Product Warranty • 30 Year Linear Power Warranty
0.45% Annual Degradation Over 30 years

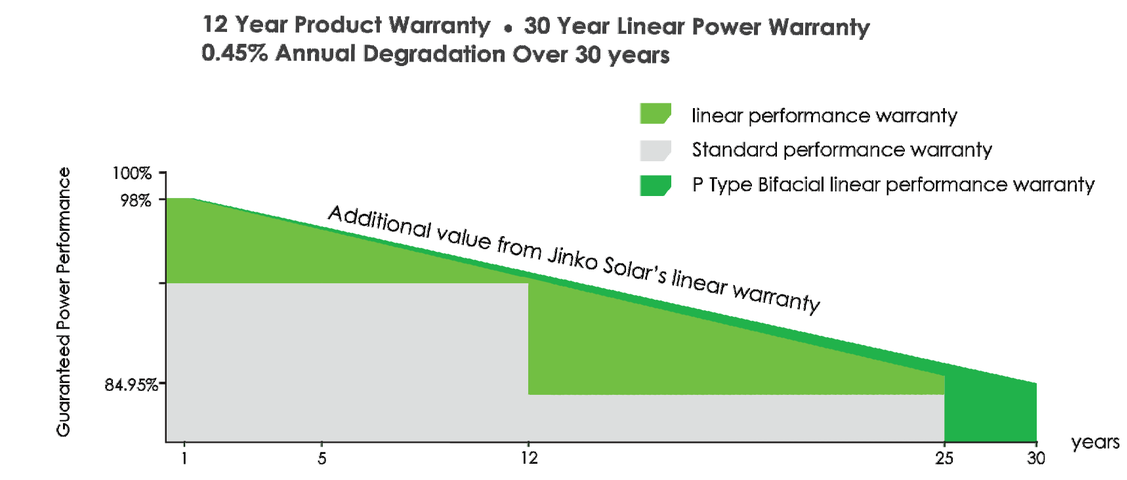

Engineering Drawings

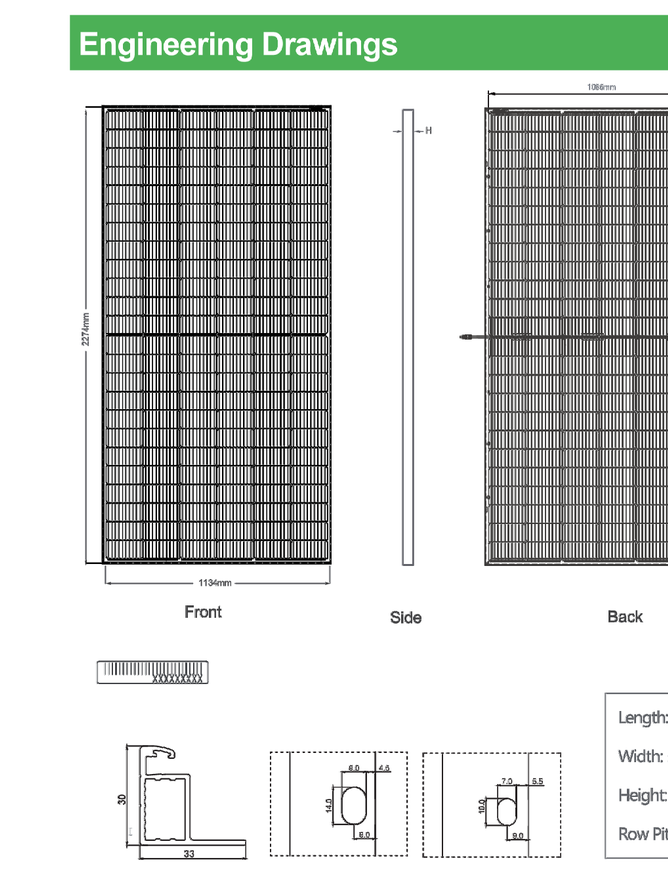

Electrical Performance & Temperature Dependence

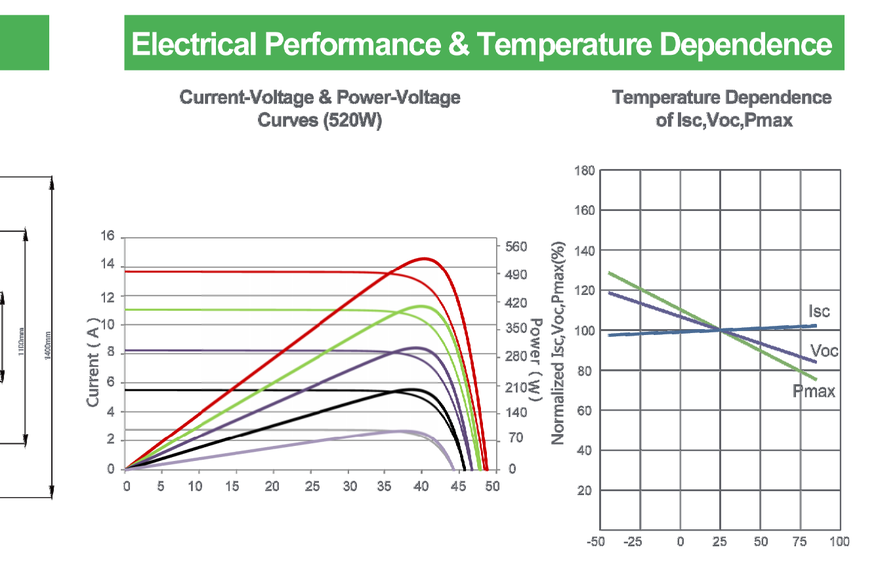

Packaging Configuration

(Two pallets = One stack)

35pcs/pallets, 70pcs/stack, 630pcs/ 40'HQ Container

Mechanical Characteristics

Cell Type	P type Mono-crystalline
No.of cells	144 (6×24)
Dimensions	2274×1134×30mm (89.53×44.65×1.18 inch)
Weight	33.3 kg (73.41 lbs)
Front Glass	2.0mm, Anti-Reflection Coating
Back Glass	2.0mm heat strengthened glass
Frame	Anodized Aluminium Alloy
Junction Box	IP68 Rated
Output Cables	TUV 1×4.0mm²; (+): 250mm , (-): 150 mm or Customized Length
Connector	JK03M/2B, genuine MC4 evo 2
Fire Rating	Class A

SPECIFICATIONS

Module Type	JKM520M-72HL4-BDVP		JKM525M-72HL4-BDVP		JKM530M-72HL4-BDVP		JKM535M-72HL4-BDVP		JKM540M-72HL4-BDVP	
	STC	NOCT	STC	NOCT	STC	NOCT	STC	NOCT	STC	NOCT
Maximum Power (Pmax)	520Wp	387Wp	525Wp	391Wp	530Wp	394Wp	535Wp	398Wp	540Wp	402Wp
Maximum Power Voltage (Vmp)	40.73V	37.74V	40.80V	37.81V	40.87V	37.88V	40.94V	37.94V	41.13V	38.08V
Maximum Power Current (Imp)	12.77A	10.25A	12.87A	10.33A	12.97A	10.41A	13.07A	10.49A	13.13A	10.55A
Open-circuit Voltage (Voc)	49.38V	46.59V	49.42V	46.65V	49.48V	46.70V	49.54V	46.76V	49.73V	46.94V
Short-circuit Current (Isc)	13.53A	10.93A	13.63A	11.01A	13.73A	11.09A	13.83A	11.17A	13.89A	11.22A
Module Efficiency STC (%)	20.17%		20.36%		20.55%		20.75%		20.94%	
Operating Temperature(℃)	-40℃~+85℃									
Maximum system voltage	1500VDC (IEC)									
Maximum series fuse rating	25A									
Power tolerance	0~+3%									
Temperature coefficients of Pmax	-0.35%/℃									
Temperature coefficients of Voc	-0.28%/℃									
Temperature coefficients of Isc	0.048%/℃									
Nominal operating cell temperature (NOCT)	45±2℃									
Refer. Bifacial Factor	70±5%									

BIFACIAL OUTPUT-REARSIDE POWER GAIN

5%	Maximum Power (Pmax)	546Wp	551Wp	557Wp	562Wp	567Wp
	Module Efficiency STC (%)	21.17%	21.38%	21.58%	21.78%	21.99%
15%	Maximum Power (Pmax)	598Wp	604Wp	610Wp	615Wp	621Wp
	Module Efficiency STC (%)	23.19%	23.41%	23.64%	23.86%	24.08%
25%	Maximum Power (Pmax)	650Wp	656Wp	663Wp	669Wp	675Wp
	Module Efficiency STC (%)	25.21%	25.45%	25.69%	25.93%	26.18%

*STC: Irradiance 1000W/m² · Cell Temperature 25°C · AM=1.5
NOCT: Irradiance 800W/m² · Ambient Temperature 20°C · AM=1.5 · Wind Speed 1m/s
*Power Measurement Tolerance: +/-3%

©2020 Jinko Solar Co., Ltd. All rights reserved.
Specifications included in this datasheet are subject to change without notice. JKM520-540M-72HL4-BDVP-A2-EN ForAUCUE

STK ARCHITECTURE, INC.
42095 ZEVO DR., TEMECULA, CALIFORNIA 92590-3780
Phone: 951.296.9110 Fax: 951.296.6079 Email: stk@stkinc.com

CONSULTANT:

REVIEWED FOR CODE COMPLIANCE
BUILDING BUREAU SOLUTIONS INC.
REVIEWED BY: STEVE KIM, PE, CASp

DESIGN WEST ENGINEERING
MECHANICAL • ELECTRICAL • ENERGY CONSULTANTS

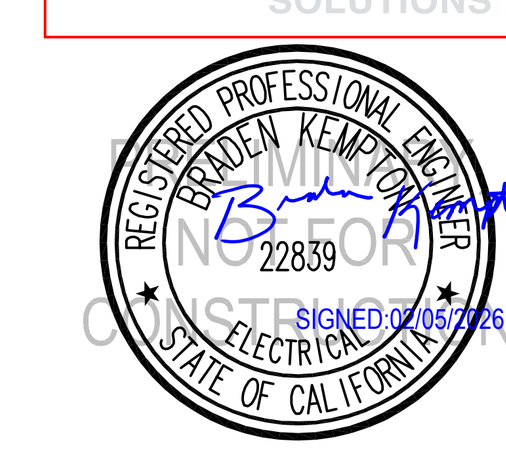

PROJECT ADMINISTERED BY:
CITY OF PERRIS

101 NORTH "D" STREET
PERRIS, CA 92570

PROJECT NAME:
SOUTH FIRE STATION AND ADMINISTRATIVE BUILDING

PROJECT CIP: F077

2495 MURRIETA ROAD
PERRIS, CA 92585

ISSUE INFORMATION:

DATE:	INFORMATION:
11-26-25	95% CD SUBMITTAL
02-05-26	△ BLDG. & SAFETY 1st PLAN CHECK

SHEET INFORMATION:
STK PROJECT NO.: 365-03-25
SCALE: AS NOTED
DATE: NOVEMBER 2025
PLOT DATE: –
DRAWN BY: JM / JM

SEAL:

SHEET TITLE:
PV CUT SHEETS

SHEET NO.:
E7.5

25-114

02/05/2026 11:36AM R:_PROJECT\2025\25-114 Perris Fire Station_CAD\PV Plans\A0 - 09 Cut Sheets.dwg

COMM. ROOM LAYOUT

SCALE: N.T.S. — 13

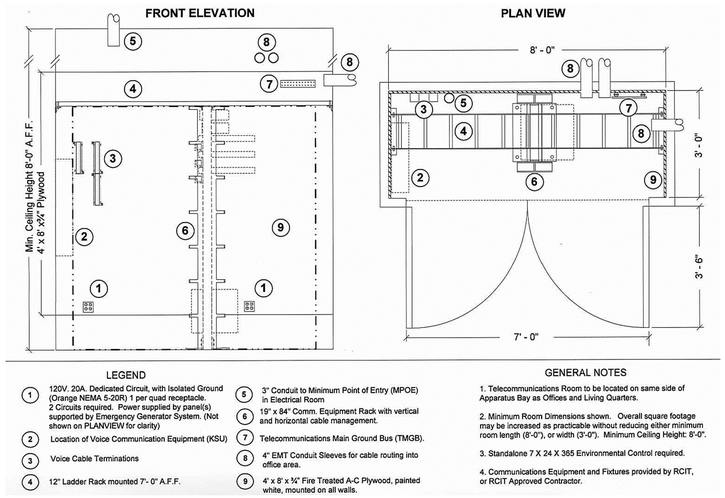

LEGEND

1. 120V. 20A. Dedicated Circuit, with Isolated Ground (Orange NEMA 5-20R) 1 per quad receptacle. 2 Circuits required. Power supplied by panel(s) supported by Emergency Generator System. (Not shown on PLANVIEW for clarity)
2. Location of Voice Communication Equipment (KSU)
3. Voice Cable Terminations
4. 12" Ladder Rack mounted 7'- 0" A.F.F.
5. 3" Conduit to Minimum Point of Entry (MPOE) in Electrical Room
6. 19" x 84" Comm. Equipment Rack with vertical and horizontal cable management.
7. Telecommunications Main Ground Bus (TMGB).
8. 4" EMT Conduit Sleeves for cable routing into office area.
9. 4' x 8' x ¾" Fire Treated A-C Plywood, painted white, mounted on all walls.

GENERAL NOTES

1. Telecommunications Room to be located on same side of Apparatus Bay as Offices and Living Quarters.
2. Minimum Room Dimensions shown. Overall square footage may be increased as practicable without reducing either minimum room length (8'-0"), or width (3'-0"). Minimum Ceiling Height: 8'-0".
3. Standalone 7 X 24 X 365 Environmental Control required.
4. Communications Equipment and Fixtures provided by RCIT, or RCIT Approved Contractor.

RADIO DETAIL

SCALE: N.T.S. — 9

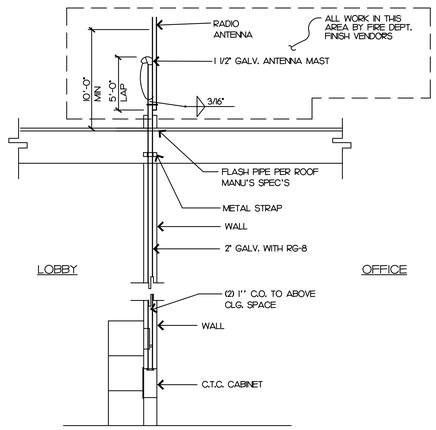

DETAIL

SCALE: N.T.S. — 5

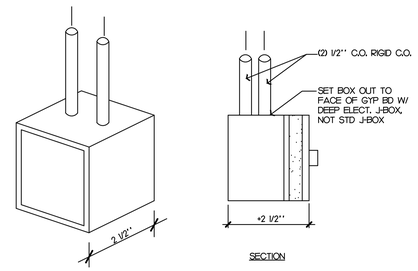

GENERAL NOTES

- ALL COMMUNICATIONS WORK SHOWN ON THIS SHEET SHALL BE PERFORMED BY A ELECTRICAL SUB-CONTRACTOR)
- CONDUITS SHALL BE REQUIRED IN VERT. AND HORIZONTAL ENCLOSED LOCATIONS ONLY. COMMUNICATION WIRE MAY BE RUN OPEN ONLY IN ACCESSIBLE AREAS.
- ELECTRICAL SUB-CONTRACTOR TO INSTALL SPEAKER HATS PROVIDED BY RIVERSIDE COUNTY FIRE.
- MARK ALL WIRES AT C.T.C. CABINET WITH TAGS CLEARLY IDENTIFYING ROOM NAMES.
- ALL COMMUNICATIONS WIRE SHALL BE 'DEARBORN MO. #882204 (4) CONDUCTOR 22 GA. OR APPROVED EQUAL.
- PROVIDE ALL TELEPHONE OUTLETS AND CONDUIT W/ 1/8" DIA. NYLON PULL ROPE AND LABEL ROOM NAMES. COORDINATE INSTALLATION WITH T-BAR INSTALLATION. ALL PHONE CONDUIT AND PULL ROPE SHALL BE COMPLETE PRIOR TO ACOUSTICAL TILE INSTALLATION.
- COORDINATE ALL TELEPHONE WORK PRIOR TO BEGIN WITH COUNTY OF RIVERSIDE FIRE DEPARTMENT PETER LENT (951) 940-6739.
- ALL CONDUIT ON THIS SHEET SHALL BE 3/4" DIA. RIGID CONDUIT UNLESS NOTED OTHERWISE.

LEGEND

- (V) VOLUME CONTROL +48" OR AS NOTED. PROVIDE ONLY J-BOX AND WIRES, ACTUAL VOLUME CONTROL DEVICE BY RIV. CO. FIRE.
- TELEPHONE OUTLET +5" OR AS NOTED PROVIDE 1/8" DIA. NYLON PULL ROPE AND LABEL END OF RUN WITH ROOM NAME.
- (J) STANDARD J-BOX WITH 3/4" CONDUIT STUBBED INTO LOBBY C.T.C. BOX COORDINATE A 110V DUPLEX OUTLET 1'-0 HORIZ. AWAY FROM J-BOX.
- (B) DOORBELL W/ CONDUIT STUBBED INTO CEILING ABOVE, WITH PULL ROPE.
- (TV) CATV CONDUIT • +5" OR AS NOTED STUBBED INTO CEILING SPACE ABOVE.
  GENERAL CONTRACTOR TO PROVIDE CATV CABLE FROM TELEPHONE BACKBOARD TO EACH CATV OUTLET SHOWN ON PLAN. COORDINATE WITH LOCAL CABLE TV OR SATELLITE TV PROVIDER.
- DATA OUTLET +5" OR AS NOTED
- (S) INDOOR SPEAKER SPECO MODEL #G8IOCT7#GW WITH MODEL #STH-8 TOP HAT FOR 8" SPEAKER (800) 645-5516
- (S WP) OUTDOOR SPEAKER SPECO MODEL #SPC-40RT PROVIDE A METAL 4-PLEX OUTLET BOX W/ COVER FOR MOUNTING (800) 645-5516
- (WAP) WIRELESS ACCESS POINT IN CEILING AND/OR WALL (+8'-0" AFF) WITH A HOME RUN OF CAT6 CABLE FROM THE J-BOX TO THE COMM. ROOM - FIELD VERIFY.

GENERAL NOTES:

GENERAL CONTRACTOR SCOPE OF WORK INCLUDES INSTALLATION OF CONDUIT, J-BOXES WITH PULL ROPE AND IDENTIFICATION.

GENERAL CONTRACTOR TO PROVIDE 120V OUTLET AS INDICATED ON PLANS BY SYMBOL OR NOTATION.

ALL OTHER EQUIPMENT PROVIDED AND INSTALLED BY OWNER.

PLEASE VERIFY/COORDINATE WITH THE OWNER PRIOR TO INSTALLATION.

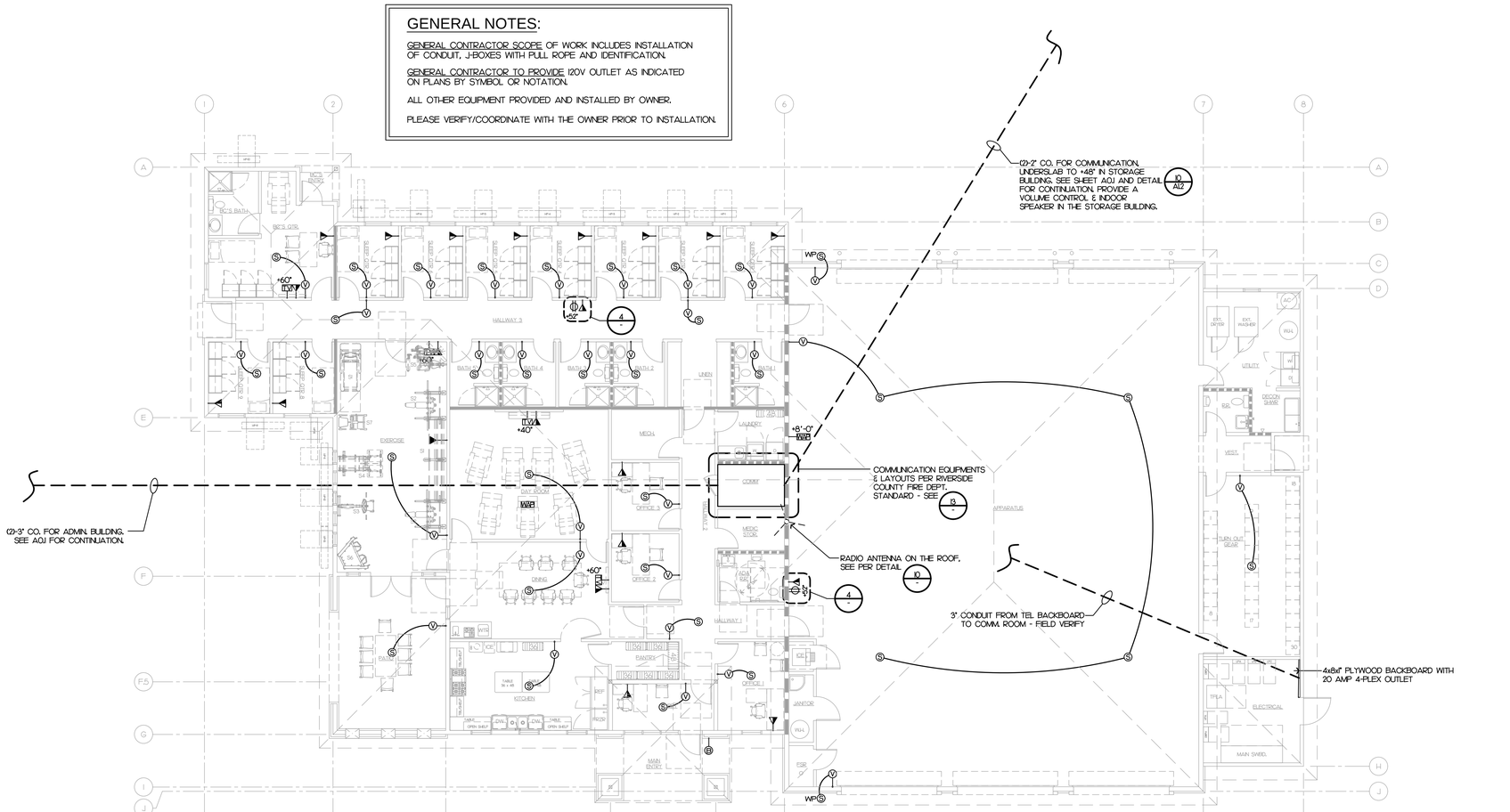

■TELECOMMUNICATIONS SYSTEM■
CONTRACTOR TO PURCHASE AND TURN OVER THE INFORMATION TECHNOLOGY EQUIPMENT TO OWNER - SEE APPENDIX D



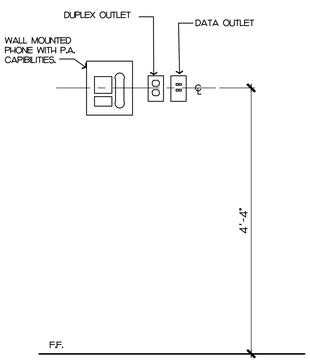

COMMUNICATIONS FLOOR PLAN - FIRE STATION

SCALE: 1/8"=1'-0" — 8

DETAIL

SCALE: N.T.S. — 4

STK
42095 ZEVO DR., TEMECULA, CALIFORNIA 92590-3780
Phone: 951.296.9110 Fax: 951.296.6079 Email: stk@stkinc.com

CONSULTANT:

REVIEWED FOR CODE COMPLIANCE

THESE PLANS AND DOCUMENTS HAVE BEEN REVIEWED AND FOUND TO BE IN COMPLIANCE WITH THE CODES ADOPTED BY THE CITY OF PERRIS JURISDICTION. ISSUANCE OF A PERMIT IS RECOMMENDED, SUBJECT TO APPROVAL BY OTHER DEPARTMENTS AND ANY NOTED CONDITIONS. THE ISSUANCE OF A PERMIT BASED ON THESE PLANS AND DOCUMENTS, OR APPROVAL OF ANY VIOLATIONS OF APPLICABLE CODES AND STANDARDS, NOR RELIEVE THE OWNER, DESIGN PROFESSIONAL OF RECORD, OR CONTRACTOR OF RESPONSIBILITY FOR COMPLYING WITH APPLICABLE CODES AND STANDARDS. THE DOCUMENTS DOES NOT AUTHORIZE CONSTRUCTION THAT IS REQUIRED IN VIOLATION OF ANY FEDERAL, STATE OR LOCAL REGULATIONS.

BUILDING BUREAU VOLUNTEER, INC.
REVIEWED BY: STEVEN MA, PE, CASp

THIS SET OF THE PLANS AND SPECIFICATIONS MUST BE KEPT ON THE JOB SITE AT ALL TIMES IT IS UNLAWFUL TO MAKE ANY CHANGES OR ALTERATIONS ON THE PLANS WITHOUT AUTHORIZATION FROM THE CITY DEPARTMENT. FOR ERRORS AND OMISSIONS THE REVIEW OF THESE PLANS DOES NOT RELIEVE THE APPLICANT OF THE RESPONSIBILITY OF COMPLYING WITH ALL APPLICABLE CODES AND REGULATIONS. ESGIL CERTIFICATION SOLUTIONS INC.

PROJECT ADMINISTERED BY:
CITY OF PERRIS

101 NORTH "D" STREET
PERRIS, CA 92570

PROJECT NAME:
FIRE STATION 105 AND ADMINISTRATION BUILDING

PROJECT CIP: F077

2495 MURRIETA ROAD
PERRIS, CA 92585

ISSUE INFORMATION:

DATE:	INFORMATION:
11-26-25	95% CD SUBMITTAL
02-05-26	1 1st PC RESPONSE
02-19-26	2 2nd PC RESPONSE

SHEET INFORMATION:

STK PROJECT NO.: 365-03-25
SCALE: AS NOTED
DATE: NOVEMBER 2025
PLOT DATE: –
DRAWN BY: JN

SEAL:

LICENSED ARCHITECT ANTONIO FINALE No. C31476 REN. 07-31-27 STATE OF CALIFORNIA

SHEET TITLE:
COMM. FLOOR PLAN - FIRE STATION

SHEET NO.:
DATA 2.0

04/14/2026 2:23PM J:\365 City of Perris\365-03.25 South Perris Fire Station\Architecture\DATA 2.0-2.2 COMM FLANS.dwg

GENERAL NOTES:

GENERAL CONTRACTOR SCOPE OF WORK INCLUDES INSTALLATION OF CONDUIT, J-BOXES WITH PULL ROPE AND IDENTIFICATION.

GENERAL CONTRACTOR TO PROVIDE 120V OUTLET AS INDICATED ON PLANS BY SYMBOL OR NOTATION.

ALL OTHER EQUIPMENT PROVIDED AND INSTALLED BY OWNER.

PLEASE VERIFY/COORDINATE WITH THE OWNER PRIOR TO INSTALLATION.

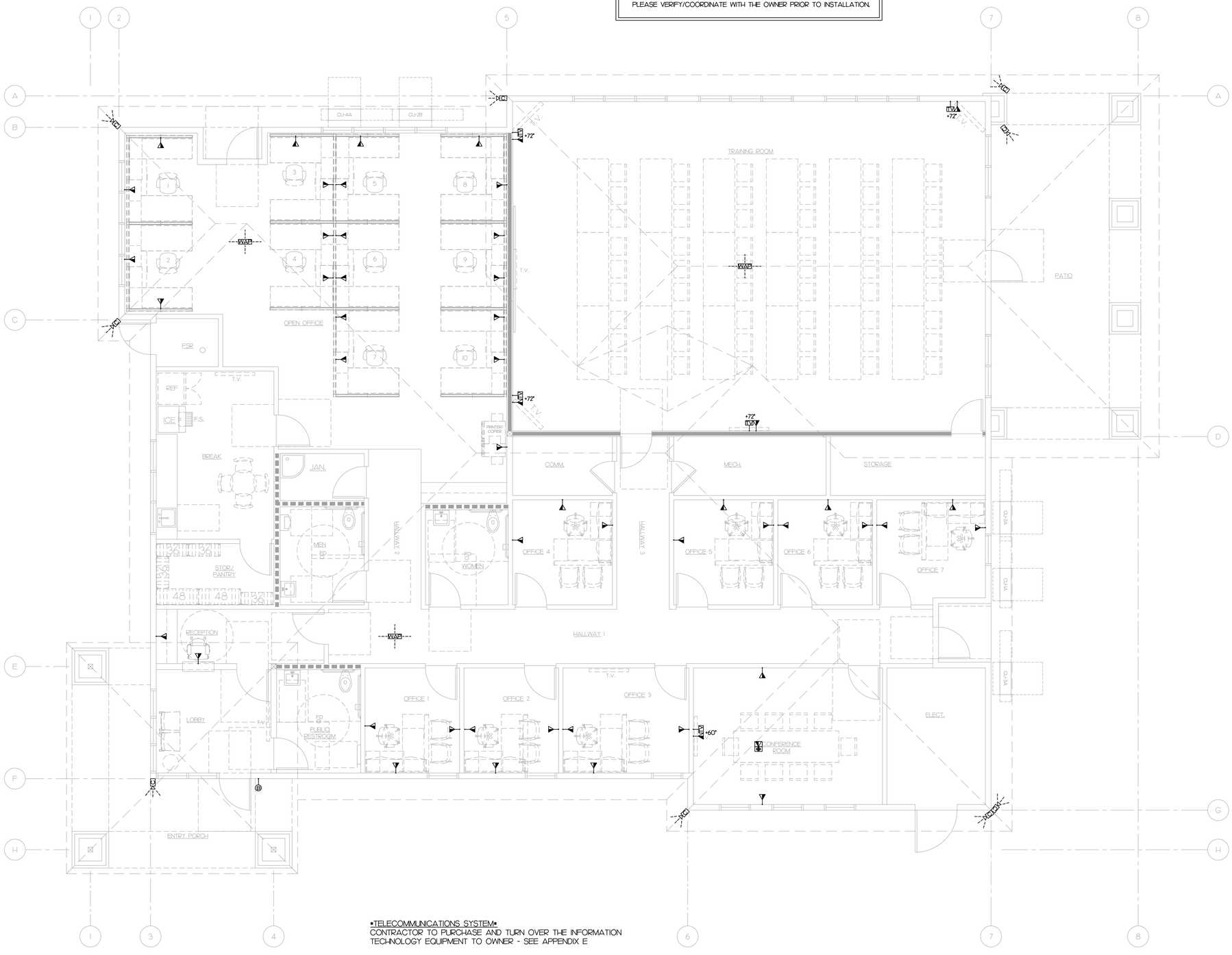

▪TELECOMMUNICATIONS SYSTEM▪
CONTRACTOR TO PURCHASE AND TURN OVER THE INFORMATION TECHNOLOGY EQUIPMENT TO OWNER - SEE APPENDIX E

GENERAL NOTES

- ALL COMMUNICATIONS WORK SHOWN ON THIS SHEET SHALL BE PERFORMED BY A ELECTRICAL SUB-CONTRACTOR)
- CONDUITS SHALL BE REQUIRED IN VERT. AND HORIZONTAL ENCLOSED LOCATIONS ONLY. COMMUNICATION WIRE MAY BE RUN OPEN ONLY IN ACCESSIBLE AREAS.
- ELECTRICAL SUB-CONTRACTOR TO INSTALL SPEAKER HATS PROVIDED BY RIVERSIDE COUNTY FIRE.
- MARK ALL WIRES AT C.T.C. CABINET WITH TAGS CLEARLY IDENTIFYING ROOM NAMES.
- ALL COMMUNICATIONS WIRE SHALL BE "DEARBORN MO. #882204 (4) CONDUCTOR 22 GA. OR APPROVED EQUAL.
- PROVIDE ALL TELEPHONE OUTLETS AND CONDUIT W/ 1/8" DIA. NYLON PULL ROPE AND LABEL ROOM NAMES. COORDINATE INSTALLATION WITH T-BAR INSTALLATION. ALL PHONE CONDUIT AND PULL ROPE SHALL BE COMPLETE PRIOR TO ACOUSTICAL TILE INSTALLATION.
- COORDINATE ALL TELEPHONE WORK PRIOR TO BEGIN WITH COUNTY OF RIVERSIDE FIRE DEPARTMENT PETER LENT (951) 940-6739.
- ALL CONDUIT ON THIS SHEET SHALL BE 3/4" DIA. RIGID CONDUIT UNLESS NOTED OTHERWISE.

LEGEND

- TELEPHONE OUTLET +15" OR AS NOTED PROVIDE 1/8" DIA. NYLON PULL ROPE AND LABEL END OF RUN WITH ROOM NAME.
- STANDARD J-BOX WITH 3/4" CONDUIT STUBBED INTO LOBBY C.T.C. BOX COORDINATE A 110V DUPLEX OUTLET 1-0 HORIZ. AWAY FROM J-BOX.
- DOORBELL W/ CONDUIT STUBBED INTO CEILING ABOVE, WITH PULL ROPE.
- CATV CONDUIT • +15" OR AS NOTED STUBBED INTO CEILING SPACE ABOVE.
  GENERAL CONTRACTOR TO PROVIDE CATV CABLE FROM TELEPHONE BACKBOARD TO EACH CATV OUTLET SHOWN ON PLAN. COORDINATE WITH LOCAL CABLE TV OR SATELLITE TV PROVIDER.
- DATA OUTLET +15" OR AS NOTED
- DATA AND POWER FLOOR BOXES - SEE ELECT.
- SECURITY CAMERA - PROVIDE PATHWAY/POWER - SEE ELECT. & FIELD VERIFY.
- WIRELESS ACCESS POINT - PROVIDE PATHWAY/POWER - SEE ELECT. & FIELD VERIFY.

COMMUNICATIONS PLAN - ADMIN. BUILDING (ADDITIVE ALTERNATE #1)

SCALE: 1/4"=1'-0"

8

STK
42095 ZEVO DR., TEMECULA, CALIFORNIA 92590-3780
Phone: 951.296.9110 Fax: 951.296.6079 Email: stk@stkinc.com

CONSULTANT:

REVIEWED FOR CODE COMPLIANCE

THESE PLANS AND DOCUMENTS HAVE BEEN REVIEWED AND FOUND TO BE IN COMPLIANCE WITH THE CODES ADOPTED BY THE AUTHORITY HAVING JURISDICTION. ISSUANCE OF A PERMIT IS NOT IMPLIED, IS SUBJECT TO APPROVAL BY OTHER DEPARTMENTS AND ANY NOTED CONDITIONS. THE APPROVAL OF THESE PLANS AND DOCUMENTS DOES NOT PERMIT THE APPROVAL OF ANY VIOLATIONS OF APPLICABLE CODES AND STANDARDS, NOR RELIEVE THE OWNER, DESIGN PROFESSIONAL OF RECORD, OR CONTRACTOR OF RESPONSIBILITY FOR COMPLIANCE. ANY CONSTRUCTION PERFORMED FROM THESE DOCUMENTS DOES NOT AUTHORIZE CONSTRUCTION CONSIDERED IN VIOLATION OF ANY FEDERAL, STATE OR LOCAL REGULATIONS.

BUILDING BUREAU ACCEPTANCE
REVIEWED BY: STEVEN MA, P.E., CASp

THIS SET OF THE PLANS AND SPECIFICATIONS SHALL BE KEPT ON THE JOB SITE AT ALL TIMES. IT IS UNLAWFUL TO MAKE ANY CHANGES OR ALTERATIONS ON THE PLANS WITHOUT AUTHORIZATION FROM THE CITY DEPARTMENT RESPONSIBLE. A FINAL APPROVAL IS GRANTED BY ALL APPLICABLE DEPARTMENTS.

ELECTRONIC RECORDS SOLUTIONS INC.

PROJECT ADMINISTERED BY:
CITY OF PERRIS

101 NORTH "D" STREET
PERRIS, CA 92570

PROJECT NAME:
FIRE STATION 105 AND ADMINISTRATION BUILDING

PROJECT CIP: F077

2495 MURRIETA ROAD
PERRIS, CA 92585

ISSUE INFORMATION:

DATE:	INFORMATION:
11-26-25	95% CD SUBMITTAL
02-05-26	1 1st PC RESPONSE
02-19-26	2 2nd PC RESPONSE
02-22-26	3 3rd PC RESPONSE
04-27-26	4 4th PC RESPONSE

SHEET INFORMATION:

STK PROJECT NO.:	365-03-25
SCALE:	AS NOTED
DATE:	NOVEMBER 2025
PLOT DATE:	–
DRAWN BY:	JN

SEAL:

LICENSED ARCHITECT ANTONIO FINALDI No. C31476 RENW. 07-31-27 STATE OF CALIFORNIA

SHEET TITLE:
COMM. FLOOR PLAN - ADMIN. BUILDING

SHEET NO.:
DATA 2.1

J:\365-City of Perris\365-03.25 South Perris Fire Station\Architecture\DATA 2.0-2.2 COMM PLANS.dwg
05/08/2026 9:40AM

4-Port Data Jacks Detail

- Where data jacks are called for in the plans:
  - Cat6 will be used for all data jacks
  - All Cat 6 will be ran through D-rings in attic/crawl space
  - Jacks will be terminated with RJ45 connectors
  - Data jacks will have 4 ports and the keystone colors will be Blue, Yellow, Green, Orange
  - Data jacks will be terminated to a rack mounted patch panel in the server room and labeled

Volume Control and In-room Speaker Details

- Electrical contractor to provide the following item where a volume control is called for:
  - A 'SPECO Attenuator, Mono, 10W, SS'
    - Part #G5106297
- A wall-mounted deep double gang box with a single gang mud ring will be installed at every volume control location
- ¾" conduit will be ran for volume controller/speaker wiring from the deep double gang box to approximately 4" into the attic/crawl space. If attic/crawl space is inaccessible, conduit will need to be ran to the server room.
- All wiring for volume control speakers will be a 4 conductor 20 AWG Cable
  - 'Alpha Wire' Part #1896/4C SL005
- Each volume control will have a labeled home run to the server room backboard which will be terminated by RVC Fire.
- Each volume control location will have:
  - a minimum 12" service loop of speaker cable at the deep double gang box from the server room.
    > The double gang box is needed to accommodate the SPECO part# WAT10 volume control
- Each speaker location installed through drywall or false ceiling shall have:
  - a cable run to the local volume control with a minimum 12" service loop at the deep double gang box
  - a minimum 24" service loop in the ceiling
  - a 'SPECO Ceiling Speaker Support for False Ceiling'
    - Part #SPC-TS8
  - a 'SPECO Ceiling Speaker Back Can'
    - Part #STH8
  - a 'SPECO Speaker'
    - Part # G86TG
- Each Speaker location installed with an open ceiling shall have:
  - a cable run to the local volume control with a minimum 12" service loop at the deep double gang box
  - a minimum 24" service loop in the ceiling round electrical box

- Outside speaker locations shall have a round electrical box installed for mounting purposes.
  - This is to accommodate the Bogen part# SPT15A Horn Loudspeaker
- County Fire Technology will terminate ALL speaker wiring to:
  - Volume controls
  - Inside/outside speakers
  - Station alerting equipment

VHF Antenna Mount Details

- A 2" rigid conduit with pull string shall be installed from the server room to the roof.
- The conduit roof penetration shall be near the highest point of the roof, or a location identified during pre-construction meetings and shall extend 3' above the roof line and fitted with a weather head to allow cabling to the antenna.
- The conduit shall be mounted in a manor at the roof to allow for a sturdy antenna mount.

Remote/Phone Details

- Where called for in the plans, a wall mounted telephone and radio remote control require the following:
  - 2 single port wall mount phone plates will be installed approximately 52" AFF and 14" apart from each other
  - 1 110VAC duplex will be installed between the single port wall mount phone plates at approximately 6" from the right port as identified below.

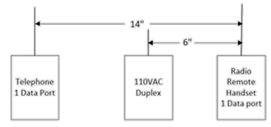

52" AFF

2.4 Apparatus Bay Access point

- Where a 2.4 access point is called for in the plans:
  - 1 - 4 port data jack will be installed approximately 10'-12' AFF within the apparatus bay as determined by the plans

  - 1 110VAC duplex will be installed approximately 4" from and at the same height as the data jack

Indoor Wireless Access Point

- Where an indoor wireless access point is called for in the plans:
  - Cat6 wiring will be homerun through the requested D-rings, labeled and terminated at the patch panel in the Server Room.
  - there shall be a 24" service loop of Cat6 in the ceiling
  - A round electrical box for mounting shall be placed in the ceiling.
  - Make/Model: Ubiquiti UAP-AC-LR

Doorbell Details

- A single homerun of 4 conductor 20 AWG cable (part # below) will be ran through the requested D-rings and labeled to the server room with a 24" service loop adjacent to the backboard.
  - 'Alpha Wire' Part #1896/4C SL005

MPOE to Server Room Pathways

- A minimum of 4 – 2" conduits shall be run from the MPOE to the server room for RVC Fire use.

Server Room Details

- A telco/ISP approved pathway needs to exist from street infrastructure to the server room
- A standard width 19", grounded rack will be required
- Either a floor mount or wall mount rack will suffice dependent upon available space
- A minimum 28U will be required
- 3 walls will require 36" x 36" ¾" fire rated backer board for the mounting of ancillary equipment
- A minimum of 2 110VAC 20A dedicated circuits will be required and located adjacent to the rack
- A minimum of 1 110VAC 20A dedicated circuit will be required and located above the rack
- When space allows, cable management trays will be installed between backer board and the rack

STK
42095 ZEVO DR., TEMECULA, CALIFORNIA 92590-3780
Phone: 951.296.9110 Fax: 951.296.6079 Email: stk@stkinc.com

CONSULTANT:

REVIEWED FOR CODE COMPLIANCE

THESE PLANS AND DOCUMENTS HAVE BEEN REVIEWED AND FOUND TO BE IN COMPLIANCE WITH THE CODES AND ORDINANCES OF THIS JURISDICTION. ISSUANCE OF A PERMIT IS RECOMMENDED, SUBJECT TO APPROVAL BY OTHER DEPARTMENTS AND ANY NOTED CONDITIONS. THE ISSUANCE OF A PERMIT BASED ON THESE PLANS AND DOCUMENTS, OR APPROVAL OF ANY VIOLATIONS OF APPLICABLE CODES AND STANDARDS, NOR RELIEVE THE OWNER, DESIGN PROFESSIONAL OF RECORD, OR CONTRACTOR OF RESPONSIBILITY FOR COMPLYING WITH APPLICABLE CODES. ANY USE OF THESE DOCUMENTS DOES NOT AUTHORIZE CONSTRUCTION DESIGNED IN VIOLATION OF ANY FEDERAL, STATE OR LOCAL REGULATIONS.

BUILDING BUREAU SUBMITTAL BY:
REVIEWED BY: STEVE MAI, PE, CASp

THIS SET OF THE PLANS AND SPECIFICATIONS MUST BE KEPT ON THE JOB SITE AT ALL TIMES IT IS UNLAWFUL TO MAKE ANY CHANGES OR ALTERATIONS ON THE PLANS WITHOUT AUTHORIZATION FROM THE CITY DEPARTMENT. THE ISSUANCE OF A PERMIT OR APPROVAL OF PLANS, SPECIFICATIONS AND COMPUTATIONS IS NOT PERMISSION OR APPROVAL TO VIOLATE ANY OF THE PROVISIONS OF APPLICABLE DEPARTMENTS.

BUILDING OFFICIAL

STK SOLUTIONS INC.

PROJECT ADMINISTERED BY:
CITY OF PERRIS

101 NORTH "D" STREET
PERRIS, CA 92570

PROJECT NAME:
FIRE STATION 105 AND ADMINISTRATION BUILDING

PROJECT CIP: F077

2495 MURRIETA ROAD
PERRIS, CA 92585

ISSUE INFORMATION:

DATE:	INFORMATION:
11-26-25	95% CD SUBMITTAL
02-05-26	1 1st PC RESPONSE
02-19-26	2 2nd PC RESPONSE

SHEET INFORMATION:

STK PROJECT NO.: 365-03-25
SCALE: AS NOTED
DATE: NOVEMBER 2025
PLOT DATE: –
DRAWN BY: JN

SEAL:

LICENSED ARCHITECT ANTONIO FINAU No. C31476 REN. 07-31-27 STATE OF CALIFORNIA

SHEET TITLE:
FIRE DEPT. COMM. STANDARDS

SHEET NO.:
DATA 2.2

J:\365-City of Perris\365-03-25 South Perris Fire Station\Architecture\DATA 2.0-2.2 COMM FD.DWG
04/14/2026 2:21PM